TÜRK LOYDU

Chapter 1 - Hull

JULY 2017

This latest edition incorporates all rule changes. The latest revisions are shown with a vertical line. The section title is framed if the section is revised completely. Changes after the publication of the rule are written in red colour.

Unless otherwise specified, these Rules apply to ships for which the date of contract for construction as defined in IACS PR No.29 is on or after 1st of July 2017. New rules or amendments entering into force after the date of contract for construction are to be applied if required by those rules. See Rule Change Notices on TL website for details.

"General Terms and Conditions" of the respective latest edition will be applicable (see Rules for Classification and Surveys).

If there is a difference between the rules in English and in Turkish, the rule in English is to be considered as valid. This publication is available in print and electronic pdf version. Once downloaded, this document will become UNCONTROLLED. Please check the website below for the valid version.

http:/www.turkloydu.org

TÜRK LOYDU

Head Office Postane Mah. Tersaneler Cad. No:26 Tuzla 34944 İSTANBUL / TÜRKİYE

Tel : (90-216) 581 37 00

Fax : (90-216) 581 38 00

E-mail : info@turkloydu.org

http://www.turkloydu.org

Regional Offices

Ankara Eskişehir Yolu Mustafa Kemal Mah. 2159. Sokak No : 6/4 Çankaya - ANKARA / TÜRKİYE

Tel : (90-312) 219 56 34

Fax : (90-312) 219 68 25

E-mail : ankara@turkloydu.org

İzmir Atatürk Cad. No :378 K.4 D.402 Kavalalılar Apt. 35220 Alsancak - İZMİR / TÜRKİYE

Tel : (90-232) 464 29 88

Fax : (90-232) 464 87 51

E-mail : izmir@turkloydu.org

Adana Çınarlı Mah. Atatürk Cad. Aziz Naci İş Merkezi No:5 K.1 D.2 Seyhan - ADANA / TÜRKİYE

Tel : (90- 322) 363 30 12

Fax : (90- 322) 363 30 19

E-mail : adana@turkloydu.org

Hull

Section 28 – Oil Tankers

Section 29 – Tugs

Section 30 – Passenger Ships

Section 31 – Special Purpose Ships

SECTION 1

GENERAL, DEFINITIONS

Note :

Passages printed in italics generally contain recommendations and notes which are not part of the Classification. Requirements quoted in extracts of statutory regulations, which are mandatory besides Classification, may also be printed in italics.

A. Validity, Equivalence

1. The Rules apply to seagoing steel ships classed **1 A 5** whose breadth to depth ratio is within the range common for seagoing ships and the depth **H** of which is not less than:

- **L**/16 for unlimited range of service and **Y** (Restricted International Service)
- **L**/18 for **K50** or **K20** (Coastal Service)
- **L**/19 **L1** or **L2** (Harbour Service).

Smaller depths may be accepted if proof is submitted of equal strength, rigidity and safety of the ship.

Hull structural design of bulk carriers with **L** ≥ 90 m. contracted for construction on or after 1st April 2006, is to be carried out on the basis of the IACS Common Structural Rules for Bulk Carriers and Oil Tankers, Part 1 and Part 2, Chapter 1.

Accordingly for double hull oil tankers with **L** ≥ 150 m. the IACS Common Structural Rules for Bulk Carriers and Oil Tankers, Part 1 and Part 2, Chapter 2 are applicable from this date on. For these ships Section 28, A. is to be observed in addition.

For bulk carriers and oil tankers below each individual length limit these **TL** Rules continue to apply under particular consideration of Section 27 and Section 28.

2. Ships deviating from the Construction Rules in their types, equipment or in some of their parts may be classed, provided that their structures or equipment are found to be equivalent to **TL**'s requirements for the respective class.

3. For Classification Notations see Classification and Surveys, Section 2, D.

4. For the ship and with the class notation IWS see the rules and regulations.

B. Restricted Service Ranges

1. For determining the scantlings of the longitudinal and transverse structures of ships intended to operate within one of the restricted service ranges **Y, K** and **L**, the dynamic loads may be reduced as specified in Section 5 and 6.

2. For the definition of the service ranges **Y, K50, K20, L1** and **L2** see "Classification and Surveys" Section 2, D.2.4.

C. Special-Purpose Vessels

When a ship is intended to carry special cargoes (e.g. logs) the loading, stowage and discharging of which may cause considerable stressing of structures in way of the cargo holds, such structures are to be investigated for their ability to withstand these loads.

D. Accessibility

1. All parts of the hull are to be accessible for survey and maintenance.

2. For safe access to the cargo area of oil tankers and bulk carriers see Section 16, G.

E. Stability

1. General

Ships with a length of 24 m. and above will be assigned class only after it has been demonstrated that their intact stability is adequate for the service intended.

Adequate intact stability means compliance with standards laid down by the Administration. TL reserve the rights deviate there from, if required for special reasons, taking into account the ships' size and type. The level of intact stability for ships with a length of 24 m and above in any case should not be less than that provided by Part A of IMO Resolution MSC.267 (85) – Adoption of the International Code on Intact Stability, 2008 as applicable to the type of ship being considered, unless special operational restrictions reflected in the class notation render this possible.

Where other criteria are accepted by the Administration concerned, these criteria may be used for the purpose of classification.

Part A Chapter 2 Item 2.3 - Severe Wind and Rolling Criterion (Weather Criterion) of MSC. 267(85) has only to be taken into account on special advice of the competent Administration.

Special attention is to be paid to the effect of free surfaces of liquids in partly filled tanks. Special precautions shall be taken for tanks which, due to the geometry, may have excessive free surface moments, thus jeopardizing the initial stability of the vessel, e.g. tanks in the double bottom reaching from side to side. In general such tanks shall be avoided.

The above provisions do not affect any intact stability requirements resulting from damage stability calculations, e.g. for ships to which the symbol **FS** is assigned.

Submission of a document approved by the Administration concerned to **TL**, may be accepted for the purpose of classification.

2. Ship with Proven Damage Stability

Ship with proven damage stability will be assigned the symbol **FS**. In an appendix to the Class Certificate the proof of the damage stability will be specified by a five digit code as detailed in “Classification and Surveys”, Section 2, D.2.7.2.

2.1 Damage stability requirements applicable to bulk carriers

2.1.1 Bulk carriers of 150 m. in length and upwards of single side skin construction, designed to carry solid bulk cargoes having a density of 1.000 kg/m^3 and above shall, when loaded to the summer load line, be able to withstand flooding of any one cargo hold in all loading conditions and remain afloat in a satisfactory condition of equilibrium, as specified in the next 2.1.2 paragraph.

Subject to the provisions of that paragraph, the condition of equilibrium after flooding shall satisfy the condition of equilibrium laid down in the annex to resolution A.320(IX), Regulation equivalent to regulation 27 of the International Convention on Load Lines, 1966, as amended by resolution A.514(13). The assumed flooding need only take into account flooding of the cargo hold space. The permeability of a loaded hold shall be assumed as 0,9 and the permeability of an empty hold shall be assumed as 0,95, unless a permeability relevant to a particular cargo is assumed for the volume of a flooded hold occupied by cargo and a permeability of 0,95 is assumed for the remaining empty volume of the hold.

Bulk carriers which have been assigned a reduced freeboard in compliance with the provisions of paragraph (8) of the regulation equivalent to regulation 27 of the International Convention on Load Lines, 1966, adopted by resolution A.320(IC), as amended by resolution A.514(13), may be considered as complying with paragraphs 2.1.1.

2.1.2 On bulk carriers which have been assigned reduced freeboard in compliance with the provisions of regulation 27(8) set out in Annex B of the Protocol of 1988 relating to the International Convention on Load Lines, 1966, the condition of equilibrium after flooding shall satisfy the relevant provisions of that Protocol.

2.1.3 Ships with assigned reduced freeboards intended to carry deck cargo shall be provided with a limiting GM or KG curve required by SOLAS Chapter II-1, Regulation 25-8, based on compliance with the probabilistic damage stability analysis of Part B-1 (see IACS Unified Interpretation LL 65).

3. Anti-Heeling Devices

3.1 If tanks are used as anti-heeling devices, effects of maximum possible tank moments on intact stability are to be checked. A respective proof has to be carried out for several draughts and taking maximum allowable centres of gravity resulting from the stability limit curve as a basis.

3.2 If the ship heels more than 10°, Chapter 4, Machinery, Section 16, P.1.4 has to be observed.

3.3 All devices have to comply with Chapter 5, Electric, Section 7, G.

F. Vibrations and Noise

1. Mechanical Vibrations

Operating conditions which are encountered most frequently should be kept free as far as possible from resonance vibrations of the ship hull and individual structural components. Therefore, the exciting forces coming from the propulsion plant and pressure fluctuations should be limited as far as possible. Beside the selection of the propulsion units particular attention is to be given to the ship's lines including the stern post, as well as to the minimization of possible cavitation. In the shaping of the bow of large ships, consideration is to be given to limit excitation from the seaway. As far as critical excitation loads cannot be eliminated, appropriate measures are to be taken on the basis of theoretical investigations at an early design stage. Fatigue considerations must be included. For machinery, equipment and other installations the vibration level is to be kept below that specified in Chapter 4, Machinery Section 1.D, as far as possible.

The evaluation of vibrations in living and working areas should follow ISO 6954 except where other national or international rules or standards are mandatory. It is recommended to use the lower transition curve of ISO 6954 as a criteria for design, whereas the upper curve may serve for the evaluation of vibration measurements.

2. Noise

Suitable precautions are to be taken to keep noises as low as possible particularly in the crew's quarters working spaces, passengers' accommodations etc. Ships, which are 1,600 gross tonnage and above as defined in SOLAS II-1/3-12 shall be constructed to reduce onboard noise and to protect personnel from the noise in accordance with “the Code on noise levels on board ships” (adopted by resolution MSC.337(91)) unless the Administration deems that compliance with a particular provision is unreasonable or impractical.

G. Documents for Approval

1. To ensure conformity with the Rules the following drawings and documents are to be submitted in triplicate showing the arrangement and the scantlings of structural members:

1.1 Midship section

The cross sectional plans (midship section, other typical sections) must contain all necessary data on the scantlings of the longitudinal and transverse hull structure as well as details of anchor and mooring equipment.

1.2 Longitudinal section

The plan of longitudinal sections must contain all necessary details on the scantlings of the longitudinal and transverse hull structure and on the location of the watertight bulkheads and the deck supporting structures arrangement of superstructures and deck houses, as well as supporting structures of cargo masts, cranes etc.

1.3 Decks

Plans of the decks showing the scantlings of the deck structures, length and breadth of cargo hatches, openings above the engine and boiler room, and other deck openings. On each deck, it has to be stated which deck load caused by cargo is to be assumed in determining the scantlings of the decks and their supports. Furthermore, details on possible loads caused by fork lift trucks and containers are to be stated.

1.4 Shell

Drawings of shell expansion, containing full details on the location and size of the openings and drawings of the sea chests.

1.5 Ice strengthening

The drawings listed in 1.1 to 1.9 must contain all necessary details on ice strengthening.

1.6 Bulkheads

Drawings of the transverse, longitudinal and wash bulkheads and of all tank boundaries, with details on densities of liquids, heights of overflow pipes and set pressures of the pressure-vacuum relief valves (if any).

1.7 Bottom structure

1.7.1 Drawings of single and double bottom showing the

arrangement of the transverse and longitudinal girders as well as the water and oiltight subdivision of the double bottom. For bulk and ore carriers, data are to be stated on the maximum load on the inner bottom.

1.7.2 Docking plan and docking calculation according to Section 7 and 8 are to be submitted for information.

1.8 Engine and boiler seatings

Drawings of the engine and boiler seatings, the bottom structure under the seatings and of the transverse structures in the engine room, with details on fastening of the engine foundation plate to the seating, as well as type and output of engine.

1.9 Stem and stern post and rudder

Drawings of stem and stern post, of rudder, including rudder support. The rudder drawings must contain details on the ship's speed, the bearing materials to be employed, and the ice strengthening. Drawings of propeller brackets and shaft exits.

1.10 Hatchways

Drawings of hatchway construction and hatch covers.
The drawings of the hatch coamings must contain all details including cut-outs for the fitting of equipment such as stoppers, securing devices etc. necessary for the operation of hatches.

1.11 Longitudinal strength

All necessary documents for the calculation of bending moments, shear forces and, if necessary, torsional moments. This includes the mass distribution for the envisaged loading conditions and the distribution of section moduli and moduli of inertia over the ship's length.

Loading Guidance Information according to Section 6. H.

1.12 Materials

The drawings mentioned in 1.1 to 1.10 and 1.15 must contain details on the hull materials (e.g. hull structural steel grades, standards, material numbers). Where higher tensile steels or materials other than ordinary hull structural steels are used, drawings for possible repairs have to be placed on board.

1.13 Weld joints

The drawings listed in items 1.1 to 1.10 and 1.15 must contain details on the welded joints e.g. weld shapes and dimensions and weld quality. For the relevant data for manufacturing and testing of welded joints see Chapter 3 - Welding.

1.14 Lashing and stowage devices

Drawings containing details on stowage and lashing of cargo (e.g. containers, car decks).

1.15 Substructures

Drawings of substructures below steering gears, windlasses and chain stoppers as well as masts and boat davits together with details on loads to be transmitted into structural elements.

1.16 Closing condition

For assessing the closing condition, details on closing appliances of all openings on the open deck in position 1 and 2 according to **ICLL 66** and in the shell, i.e. hatchways, cargo ports, doors, windows and side scuttles, ventilators, erection openings, manholes, sanitary discharges and scuppers.

1.17 Intact stability

An inclining experiment must be performed upon completion of newbuildings and/or conversions in order to determine the lightship particulars.

Intact stability particulars containing all information required for calculation of stability in different loading conditions are to be provided. For initial assignment of class to newbuildings, preliminary particulars will be acceptable.

1.18 Damage stability

Damage stability particulars containing all information required for establishing unequivocal condition for intact

stability are to be provided. A damage control plan with details on watertight subdivision, closable openings in watertight bulkheads as well as cross-flooding arrangements and discharge openings shall also be submitted.

1.19 Structural fire protection

In addition to the fire control and safety plan also drawings of the arrangement of divisions (insulation, A,B and C divisions) including information regarding **TL**-approval number.

Drawings of air conditioning and ventilation plants.

1.20 Special particulars for examination

1.20.1 For ships constructed for special purposes, drawings and particulars of those parts, examination of which is necessary for judging the vessel's strength and safety.

1.20.2 Additional documents and drawings may be required, if deemed necessary.

1.20.3 Any deviations from approved drawings are subject to approval before work is commenced.

H. Definitions

1. General

Unless otherwise mentioned, the dimensions according to 2. and 3. are to be inserted in [m] into the formula stated in the following Sections.

2. Principal Dimensions

2.1 Length L : The length **L** is the distance, on the summer load waterline from the fore side of stem to the after side of the rudder post, or the centre of the rudder stock, if there is no rudder post. **L** is not to be less than 96 % and need not be greater than 97 % of the extreme length of the summer load waterline. In ships with unusual stern and bow arrangement, the length **L** will be specially considered.

2.2 Length L_c : (According to ICLL 66, MARPOL 73/78, IBC-Code and IGC-Code) The length L_c is to be taken as 96% of the total length on a waterline at 85 % of the least moulded depth measured from the top of the keel, or as the length from the fore side of the stem to the axis of the rudder stock on that waterline, if that be greater. In ships designed with a rake of keel, the waterline on which this length is measured shall be parallel to the designed waterline.

2.3 Length L^* : (According to SOLAS 74) The length L^* of the ship is the length measured between perpendiculars taken at the extremities of the deepest subdivision load line.

2.4 Subdivision length L_s : Reference is made to the definition in **SOLAS 74**, Chapter II-1, Reg. 25-2.2.1 and in Section 26, A.2.27.

2.5 Forward perpendicular : The forward perpendicular coincides with the foreside of the stem on the waterline on which the respective length **L, L_c**, or L^* is measured.

2.6 Breadth B : The breadth **B** is the greatest moulded breadth of the ship.

2.7 Depth H : The depth **H** is the vertical distance, at the middle of the length **L**, from the base line to top of the deck beam at side on the uppermost continuous deck.

In way of effective superstructures the depth **H** is to be measured up to the superstructure deck for determining the ship's scantlings.

2.8 Draught T : The draught **T** is the vertical distance at the middle of the length **L** from base line to freeboard marking for summer load waterline. For ships with timber load line the draught **T** is to be measured up to the freeboard mark for timber load waterline.

3. Frame Spacing a : The frame spacing **a** will be measured from moulding edge to moulding edge of frame.

4. Block Coefficient C_B : Moulded block coefficient at load draught **T**, based on rule length **L**.

$$C_B = \frac{V}{L \cdot B \cdot T}$$

V = Moulded displacement at draught T [m^3]

5. Ship's Speed v_o : Maximum service speed [kn], which the ship is designed to maintain at the summer load line draught and at the propeller RPM corresponding to MCR (Maximum Continuous Rating).

In case of controllable pitch propellers the speed v_o is to be determined on the basis of maximum pitch.

6. Definition of Decks

6.1 Bulkhead deck

Bulkhead deck is the deck up to which the watertight bulkheads are carried.

6.2 Freeboard deck

Freeboard deck is the deck upon which the freeboard calculation is based.

6.3 Strength deck

Strength deck is the deck or the parts of a deck which form the upper flange of the effective longitudinal structure.

6.4 Weather deck

All free decks and parts of decks exposed to the sea are defined as weather deck.

6.5 Lower decks

Starting from the first deck below the uppermost continuous deck, the decks are defined as 2nd, 3rd deck, etc.

6.6 Superstructure decks

The superstructure decks situated immediately above the uppermost continuous deck are termed forecastle deck, bridge deck and poop deck. Superstructure decks above the bridge deck are termed 2nd, 3rd superstructure deck, etc.

6.7 For the arrangement of hatches, doors and ventilators the following areas are defined:

Position 1

- On exposed freeboard decks,
- On raised quarter decks,
- On the first exposed superstructure decks above the freeboard deck within the forward quarter of L_c.

Position 2

- On exposed superstructure decks aft of the forward quarter of L_c located at least one standard height of superstructure above the freeboard deck.
- On exposed superstructure decks within the forward quarter of L_c located at least two standard heights of superstructure above the freeboard deck.

J. International Conventions and Codes

Where reference is made of international Conventions and Codes these are defined as follows:

1. ICLL 66

International Convention on Load Lines,1966

2. MARPOL 73/78

International Convention for the Prevention of Pollution from Ships,1973 including the 1978 Protocol.

3. SOLAS 74

International Convention for the Safety of Life at Sea, 1974 as amended.

4. IBC-Code

International Code for the Construction and Equipment of Ships Carrying Dangerous Chemicals in Bulk as amended.

5. IGC-Code

International Code for the Construction and Equipment of Ships Carrying Liquefied Gases in Bulk as amended.

K. Rounding-Off Tolerances

Where in determining plate thicknesses in accordance with the provisions of the following Sections, the figures differ from full or half mm, they may be rounded off to full or half millimeters up to 0.2 or 0.7, above 0.2 or 0.7 mm they are to be rounded up.

L. Regulations of National Administrations

For the convenience of the user of these Rules several Sections contain for guidance references to such regulations of national administrations, which deviate from the respective rule requirements of **TL** but which may have effect on scantlings and construction. These references have been specially marked.

Compliance with these regulations of national administrations is not conditional for class assignment.

M. Computer Programs

1. General

1.1 In order to increase the flexibility in the structural design of ships **TL** also accepts direct calculations with computer programs. The aim of such analyses should be the proof of equivalence of a design with the rule requirements.

1.2 Direct calculations may also be used in order to optimize a design; in this case only the final results are to be submitted for examination.

2. Programs

2.1 The choice of computer programs is free. The programs may be checked by **TL** through comparative calculations with predefined test examples. A generally valid approval for a computer program is, however, not given by **TL** .

2.2 Direct calculations may be used in the following fields:

- Longitudinal strength,
- Beams and grillages,
- Detailed strength,
- Global strength.

2.3 For such calculation the computer model, the boundary condition and load cases are to be agreed upon with **TL**. The calculation documents are to be submitted including input and output. During the examination it may prove necessary that **TL** perform independent comparative calculations.

N. Workmanship

1. General

1.1 Requirements to be complied with by the manufacturer

1.1.1 The manufacturing plant must be provided with suitable equipment and facilities to enable proper handling of the materials, manufacturing processes, structural components, etc. **TL** reserves the right to inspect the plant accordingly or to restrict the scope of manufacture to the potential available at the plant.

1.1.2 The manufacturing plant must have at its disposal sufficiently qualified personnel. **TL** must be advised of the names and areas of responsibility of all supervisory and control personnel. **TL** reserves the right to require proof of qualification.

1.2 Quality control

1.2.1 As far as required and expedient, the manufacturer's personnel has to examine all structural components both during manufacture and on completion, to ensure that they are complete, that the dimensions are correct and that workmanship is satisfactory and meets the standard of good shipbuilding practice.

1.2.2 Upon inspection and corrections by the manufacturing plant, the structural components are to be shown to the **TL** Surveyor for inspection, in suitable sections, normally in unpainted condition and enabling proper access for inspection.

1.2.3 The Surveyor may reject components that have not been adequately checked by the plant and may demand their re-submission upon successful completion of such checks and corrections by the plant.

2. Structural Details

2.1 Details in manufacturing documents

2.1.1 All significant details concerning quality and functional ability of the component concerned shall be entered in the manufacturing documents (workshop drawings, etc.). This includes not only scantlings but - where relevant - such items as permissible tolerances, surface conditions (finishing), and special methods of manufacture involved as well as inspection and acceptance requirements. For weld joint details, see Section 20, A.1.

2.1.2 If, due to missing or insufficient details in the manufacturing documents, the quality or functional ability of the component cannot be guaranteed or is doubtful, **TL** may require appropriate improvements. This includes the provision of supplementary or additional parts (for example reinforcements) even if these were not required at the time of plan approval or if -as a result of insufficient detailing- such requirement was not obvious.

2.2 Cut-outs, plate edges

2.2.1 The free edges (cut surfaces) of cut-outs, hatch corners, etc. are to be properly prepared and are to be free from notches. As a general rule, cutting drag lines etc. must not be welded out, but are to be smoothly ground. All edges should be broken or in cases of highly stressed parts, should be rounded off.

2.2.2 Free edges on flame or machine cut plates or flanges are not to be sharp cornered and are to be finished off as laid down in 2.2.1 This also applies to cutting drag lines etc., in particular to the upper edge of shear strake and analogously to weld joints, changes in sectional areas or similar discontinuities.

2.3 Cold forming

2.3.1 For cold forming (bending, flanging, beading) of plates the minimum average bending radius should not fall short of 3 t (t = plate thickness) and must be at least 2 t. Regarding the welding of cold formed areas, see Section 20, B.2.6.

2.3.2 In order to prevent cracking, flame cutting flash or sheering burrs must be removed before cold forming. After cold forming all structural components and, in particular, the ends of bends (plate edges) are to be examined for cracks. Except in cases where edge cracks are negligible, all cracked components are to be rejected. Repair welding is not permissible.

2.4 Assembly, alignment

2.4.1 The use of excessive force is to be avoided during the assembly of individual structural components or during the erection of sections. As far as possible major distortions of individual structural components should be corrected before further assembly.

2.4.2 Girders, beams, stiffeners, frames etc. that are interrupted by bulkheads, decks etc. must be accurately aligned. In the case of critical components, control drilling are to be made where necessary, which are then to be welded up again on completion.

2.4.3 After completion of welding, straightening and aligning must be carried out in such a manner that the material properties will not be influenced significantly: In case of doubt, **TL** may require a procedure test or a working test to be carried out.

3. Corrosion Protection

An adequate corrosion protection of the hull and other parts and equipment shall be provided according to the rules and guidelines provided in Section 22. In addition, fouling control measures must be taken into account for the submerged part of the hull.

O. Definition of Symbols

g = Acceleration due to gravity [9.81 m/s^2]

GM = Metacentric height [m]

k = Material factor

P = Applicable design pressure load [kN/m^2]

F = Single forces [kN]

V = Ship's speed [knots]

x = Distance from aft end of length L [m]

y = Horizontal distance [m].

z = Vertical distance [m]

ρ_L = Density of liquids [t/m3]

a_V = Vertical acceleration [m/s^2]

t = Plate thickness [mm]

t_K = Corrosion addition [mm]

t_{min} = Minimum plate thickness [mm]

Δ = Displacement of the ship [t].

T = Temperature [$^\circ$C]

ℓ = Unsupported span [m]

i_S = Radius of gyration of pillar [cm]

λ_S = Degree of slenderness of pillar

R_{eH} = Minimum nominal upper yield point [N/mm^2]

I = Moment of inertia [cm^4]

W = Section modulus [cm^3]

σ = Bending stress [N/mm^2]

τ = Shear stress [N/mm^2]

E = Young's modulus [N/mm^2]

S = First moment of the sectional area considered [m^3],

M = Bending moment [kNm]

Q = Shear force [kN]

SECTION 2

HABITABILITY

A. General

1. Introduction

1.1 This section has been developed with the objective of improving the quality of seafarer performance by improving their working and living environments in terms of ambient environmental qualities and in some instances the physical characteristic on board cargo vessels and passenger vessels.

1.2 At the owner's or shipyard's request, a vessel complying with the minimum criteria for crew accommodations and the ambient environment (i.e. noise, climate control and lighting) provided in this section shall be assigned a notation of **ACCOM**. A vessel complying with all of the more stringent habitability criteria with respect to crew accommodation, whole-body vibration and climate control shall be distinguished in the record by the notation **ACCOM+**. A summary of the differences between each of the notations is given in Table 2.1.

2. Application

This section is applicable to new and existing vessels for which an optional Accommodation (ACCOM) or an Accommodation Plus (ACCOM+) notation has been requested. The habitability criteria are a measure of the acceptability of crew accommodations and workspaces for living and working. Meeting the criteria of this section will fulfill the physical aspects of design but not the procedural or managerial aspects of International Labor Organization (ILO) Conventions 92 and 133. However, additional criteria imposed by individual Flag Administrations may also be applicable.

3. Restrictions

3.1 This rules does not apply to;

- Ships of less than 500 GT;
- Ships primarily propelled by sail, whether or not they are fitted with auxiliary engines;
- Ships engaged in fishing or in whaling or in similar pursuits;
- Hydrofoils and air-cushion craft.

3.2 Provided that the rules shall be applied where reasonable and practicable to;

- Tugs,
- Ships between 200 and 500 GT,
- The accommodation of persons engaged in usual sea-going routine in ships engaged in whaling or in similar pursuits.

4. Scope

This section focuses on five (5) habitability aspects of cargo and passenger vessel design and layout that can be controlled, measured and assessed. These five (5)

Table 2.1 Notation

Notation	Accommodations	Ambient Environment			
		Vibration	Noise	Climate Control	Lighting
ACCOM	Must meet ACCOM criteria for accommodations	Must meet performance-based vibration level criteria	No difference between ACCOM and ACCOM +	The criteria provide for a set temperature within limits	No difference between ACCOM and ACCOM +
ACCOM +	Must meet additional ACCOM + criteria for accommodations	Must meet comfort-based vibration level criteria		The criteria provide for adjustability to suit comfort	

aspects are broken into two (2) major types in this section: Accommodations and the ambient environment.

Accommodations criteria pertain to dimensional or physical aspects of spaces and open deck areas where crew members eat, sleep, recreate and conduct their daily activities.

The ambient environmental aspects of habitability pertain to the environment that the crew is exposed to during periods of work, leisure and rest. Specifically, this section provides criteria, limits and measurement methodologies for the following:

- Vibration
- Noise
- Climate Control
- Lighting
- Accommodations

5. Definitions

Accommodations: Vessel areas where the primary purpose is to rest or recreate. Accommodations spaces include cabins and staterooms, medical facilities (sick bays), offices, public and recreation rooms. For the purposes of this section, accommodations also include service spaces such as the mess rooms, laundry, storerooms and workshops.

Ambient Environment: Ambient environment refers to the environmental conditions that the crew is exposed to during periods of work, leisure or rest. Specifically, this section provides criteria and limits for whole-body vibration, noise, climate control and lighting.

Cargo Vessel: A cargo vessel is any vessel not specifically a passenger vessel and that is involved in commercial trade.

Habitability: The acceptability of the conditions of a vessel in terms of vibration, noise, climate control and lighting as well as physical and spatial characteristics, according to prevailing research and standards for human efficiency and comfort.

Passenger Vessel: A vessel whose primary purpose is to carry more than twelve (12) passengers for transportation or recreational purposes. This includes cruise ships and ferries (conventional and high- speed craft).

Recreational and Public Spaces: Those portions of the crew accommodations which are used for halls, dining rooms, lounges and similar permanently enclosed spaces.

Workspaces: Areas allocated for work. Categories of workspaces include: navigation spaces, service spaces (galley, laundry) and machinery spaces.

6. Documents for Approval

6.1 Before the construction of a ship is begun a plan of the ship, showing on a prescribed scale the location and general arrangement of the crew accommodation, shall be submitted for approval.

6.2 Before the construction of the crew accommodation is begun and before the crew accommodation in an existing ship is altered or reconstructed, detailed plans of, and information concerning, the accommodation, showing on a prescribed scale and in prescribed detail the allocation of each space, the disposition of furniture and fittings, the means and arrangement of ventilation, lighting and heating, and the sanitary arrangements, shall be submitted for approval. Provided that in the case of emergency or temporary alterations or reconstruction affected outside the territory of registration it shall be sufficient compliance with this provision if the plans are subsequently submitted for approval.

B. Vibration

1. General

1.1 In this section, the recommendations, rules and requirements for assessing the influence of vibration on habitability by the crew (and on comfort of passengers where applicable) are presented. The assessment procedures also include the effect of vibration on the hull structures.

1.2 Vibration standards for the main and auxiliary ship machinery and equipment are specified in Section 19. A and **TL** Chapter 4, Machinery, Section 1, D.4, for

main shafting in Section 5.D and for torsional vibration in Section 6. Similarly, the vibration standards for ship's electronic devices are given in Section 1, F.1.

1.3 Other transient cyclic phenomena such as sloshing, slamming (whipping), springing and shock impact loading are outside the scope of this section.

1.4 The vibration standards are applicable to all types of displacement hulls unless specified otherwise. Additional requirements and rules pertaining to naval ships, passenger ferries, yachts, fishing boats, tugs and other types of ships built for special purposes are presented in the relevant sections of the **TL** Rules Hull, Chapter 1. The recommendations, requirements and rules apply both to new ships and to existing ships will be classed.

1.5 Theoretical examinations and/or approval of vibration related calculations are not part of the classification process. Additional services can be offered by **TL**, if desired.

1.6 For the definition of basic principles of procedures and measurements, as well as details of the devices and methods, it is necessary to rely on well proven national and international standards. Unless a particular standard edition is referred to explicitly, the latest edition of the following standards is to be applied:

If the present **TL** Rules contain procedures deviating from the relevant standards, the **TL** Rules are to be given the precedence over other standards.

1.7 As a general principle, when vibration is found to exceed the limits set in this section, the relevant case shall not be allowed. However, for those structural details and members with known global stresses, the standard vibration limits may be changed. By special agreement with **TL**, departure from the present standards may be permitted if a given case is well examined and well grounded.

1.8 **TL** shall be the sole authority to determine and decide if a set of calculation and/or measurement results obtained for a given ship is also valid for its sister ships under similar loading and mass distribution conditions.

2. International Vibration Standards

- ISO 2041, “Mechanical vibration, shock and condition monitoring – Vocabulary and Definitions”
- ISO 6954, “Mechanical vibrations – Guidelines for the measurement, reporting and evaluation of vibration with regard to habitability on passenger and merchant ships.”
- ISO 20283-2, “Mechanical vibration – Measurement of vibration on ships – Part 2: Measurement of structural vibration”
- ISO 20283-3, “Mechanical vibration – Measurement of vibration on ships – Part 3: Pre-installation vibration measurement of shipboard equipment”
- ISO 8041, “Human response to vibration – Measuring instrumentation”

3. Abbreviations

r.m.s. : Root mean square

ISO : International Organization for Standardization

TS : Turkish Standards

FFT : Fast Fourier Transformation

4. Definitions

The vibration vocabulary, definitions and units are required to agree with TS 2774 and/or the corresponding international standards. Unless stated otherwise, the assumptions, definitions and specifications of the international standards ISO 2041, ISO 20283-2, ISO 20283-3 are valid for the purpose of the present section. The fundamental parameters and units of vibration are applicable as defined in ISO 2041, ISO 20283-2 and ISO 20283-3.

Vibration level: The vibration level under investigation

is to be measured as r.m.s. velocity (mm/s), unless r.m.s. displacement (mm) or r.m.s. acceleration (mm/s^2) is specified.

Structural vibration: The level of vibration measured on the vessel structure is denoted as the structural vibration.

Global structural vibration: Global structural vibration refers to the vibration which can be defined by the deflection shapes of the major structural parts of the ship. The major structural parts of a ship are the hull girder, the superstructure and the aft body.

Local structural vibration: Local structural vibration refers to the vibration which can be defined by the deflection shapes limited to a local structural part of the ship. The local parts of a ship include parts of the superstructure, mast, tank bulkheads, web frames, stiffeners, and plates.

Free route: Condition achieved when the ship is proceeding at a constant speed and course heading with helm adjustment of $\pm 2^o$ or less without throttle adjustment.

Machinery vibration: The vibration level measured on machinery, their components, equipment, pipes, etc.

Equipment: Any machine, system, subsystem or a component there of which is likely to be a source of vibration excitation and is intended to be installed aboard ships.

5. Structural Vibration

5.1 General

5.1.1 Structural vibration shall be limited in order to ensure structural integrity. In addition, the level of vibration shall not exceed limits above which the working conditions and general comfort aboard ship are disturbed above a maximum acceptable degree.

5.1.2 The acceptable structural vibration shall be below the level which initiates fatigue cracks or it shall indicate low risk for fatigue cracks.

5.1.3 The structural vibration is be identified as either global or of local nature.

5.1.4 In general, the structural vibration measurements are to be performed in all of the three axial directions x, y and z. Depending on the function of the structural member and the purpose of the measurements, the directions of measurement may be reduced to at least one axial direction.

5.2 Global Structural Vibration

As the structural properties become available during the hull girder design, the dry and wet global vibration characteristics can be estimated by either a 2D (beam) or 3D (finite element) model of the ship structure in conjunction with an appropriate hydrodynamic theory. Paragraph 1.5 shall be applicable to such calculations.

5.3 Local structural vibration

At structural design stage, the natural frequencies of local panels and stiffened panels especially in the superstructure, the engine room and stern-end structure can be estimated by using simplified theoretical formulae or finite element analysis.

6. Measurements

6.1 General

6.1.1 In this section, the general rules and specific requirements on the measurement, evaluation and reporting procedures for the structural vibration excited by the propulsion plant are outlined.

6.1.2 Although the torsional vibration of shafts or crankshafts may in some cases cause structural vibrations, they are not considered in this section. In this connection, reference is to be made to the requirements in Chapter 4, Machinery, Section 6.B, C, D and E and **TL** rules where relevant.

6.2 Instrumentation

6.2.1 The measurement and calibration equipment are to comply with ISO 6954 and ISO 8041 and the national standards TS EN ISO 8041.

6.2.2 For vibration measurements, the instrumentation shall include at least an accelerometer or a velocity transducer connected to a matching amplifier and a FFT analyzer. **TL** recommends such measurements to be tape-recorded for further analysis if required.

6.2.3 The transducer orientation shall correspond to the three global longitudinal, transverse and vertical axes of the ship.

6.2.4 The measurement duration shall be at least 1 minute. If significant frequency components exist in the range below 2 Hz, a measurement duration of at least 2 minutes is required.

6.3 Measurement Conditions

This section outlines the minimum rules and requirements related to the measurement of structural vibration.

- The vibration tests and measurements are to be conducted under the conditions agreed by the shipyard and the ship owner.

- The conditions agreed by the shipyard and the ship owner shall satisfy the rules and requirements of this section as well as the requirements of ISO 20283-2 and ISO 20283-3.

TL may consider other conditions for vibration measurements dictated by the ship type and/or operational restrictions.

6.3.1 Environment Conditions

6.3.1.1 The water depth shall be more than 5 times the ship draught. If the ship is intended for service in shallow waters, the trial depth shall be chosen accordingly.

6.3.1.2 The sea state shall be 3 or less. If the vibration tests are performed in seas greater than sea state 3, the sea state shall be noted in the measurements report and the report shall contain a section with signal analysis applied to high – pass filtered measurement data (>2 Hz).

6.3.1.3 It is recommended that the vibration tests are carried out in sea states 2 or less for ships smaller than 10000 tonnes.

6.3.1.4 The measurements report is to incorporate a full description of the environmental conditions prevailing during the tests.

6.3.2 Loading Conditions

6.3.2.1 The ship is to be loaded so that, as a minimum, the propeller shall be fully immersed. The loading condition (test condition) during the sea trials of the ship shall preferably be a designed operating condition, i.e. ballast or loaded condition.

6.3.2.2 The measurements report is to incorporate a full description of the ship's loading condition during the tests.

6.3.3 Course

6.3.3.1 The vibration measurements are to be performed when the ship navigates under free route conditions (see item 4 above).

6.3.3.2 Rudder action is to be kept to a minimum.

6.3.3.3 Considering the ship type and operating conditions, **TL** may require the vibration levels to also be identified when the ship manoeuvres. Such manoeuvres are to include any one or all of hard turn port, hard turn starboard and crash back.

6.3.3.4 The measurements report is to incorporate full details of the ship's course kept during the tests.

6.3.4 Speed and engine power

6.3.4.1 For identifying the main operational vibration deflection shapes and the associated natural mode shapes and frequencies of vibration, the measurements shall be conducted in free route runs in the speed range corresponding to approximately 30% to 100% of the maximum continuous rated power.

6.3.4.2 The recommendations of ISO 20283-2 related to the ship's speed and engine power are to be

implemented during the vibration measurements.

6.3.4.3 The measurements report is to incorporate full details of the ship's speed and engine power applied during the tests.

6.4 Measurement Locations

6.4.4.1 In this section, the determination of locations and directions of vibration measurements on the ship structure is outlined. The measurement locations and directions may vary depending on the ship's type and loading condition. The rules and recommendations of ISO 20283-2 shall be applicable when determining the measurement locations and directions.

6.4.4.2 The locations required for measuring vibration levels in the machinery room and related compartments are given in the requirements of Chapter 4, Machinery, Section 1, D.4 and D.8.

6.4.4.3 **TL** recommends that the measurements are performed in all three axial directions at a minimum of two locations on each deck. At other locations, measurements are only required in the vertical direction.

6.4.4.4 The suitable measurement positions are to be determined by reference to a theoretical global vibration analysis, if available. If a theoretical analysis is not available, guidance for the selection of measurement positions can be obtained from ISO 20283-2 Annex A.

6.5 Measurements report

The results of the measurements conducted to determine the structural vibration levels shall be presented to **TL** in a report. The format may vary depending on the measurement techniques and conditions, data analysis methods and the purpose of measurements. However, the report shall satisfy the rules and requirements of 6.5.1 and 6.5.2.

6.5.1 Analysis of data

6.5.1.1 The measurements shall be analyzed using FFT techniques and presented in the frequency domain in the form of frequency spectra.

6.5.1.2 The criteria of vibration level are to be expressed in terms of overall frequency-weighted r.m.s. velocity (mm/s) from 1 Hz to 80 Hz as defined by ISO 6954.

6.5.1.3 **TL** recommends that the spectral analysis between 1 Hz and 80 Hz is to be performed to yield at least 350 spectral estimates and a suitable window function shall be used to obtain an accurate estimate of the peak values in the frequency spectra.

6.5.1.4 The analysis of the measured data using different techniques other than those described above or presentations in different formats such as time histories or waterfall diagrams are subject to approval by **TL**.

6.5.2 Reporting of data

6.5.2.1 **TL** recommends the following units to be used in reporting and data presentation. If units other than those specified below are used in reporting, they shall be defined in detail to avoid ambiguity:

- **Acceleration:** millimeters per second squared (mm/s^2)
- **Velocity:** millimeters per second (mm/s)
- **Displacement:** millimeters (mm)
- **Pressure:** Kilopascals (kPa)

6.5.2.2 The report shall, as a minimum, contain the following information and data:

- References to the International Standards where applicable.
- General information on the tests such as the place and time of the tests, identification of persons and organizations performing the tests.
- Particulars and other design characteristics of the ship tested.
- Particulars of propulsion and shaft system.
- Particulars of the main diesel engine or turbine driven main power plant.

- Trial conditions during vibration measurements including sea state, wave direction, depth of water under keel, draft at FP and AP, propeller immersion.

- Actual ship condition at the time of the test.

- Locations and orientations of the transducers:

  - A sketch showing locations of hull girder and machinery transducers and their directions of measurement.

  - Transducer locations for local vibration measurements shown on a separate sketch where the precise location of the transducer is noted.

- Recording equipment and calibration procedure.

- Results of the measurements such as,

  - Method of data analysis,

  - Tables indicating the severity and location of all significant vibration levels encountered during the tests,
  - Plots of displacement, velocity and/or acceleration amplitudes.

- The state of the aft peak tank, if any.

- Arrangement and type of transverse main engine stays, if any.

- Arrangement and type of axial vibration damper, if any.

- Arrangement and type of torsional vibration damper, if any.

- Arrangement and type of vibration balancer, if any.

6.5.2.3 Depending on the location and possible special characteristics of a specific measurement, **TL** may require additional information, drawings and documentation such as,

- Lines plan,

- Midship section drawing,

- Drawing of the propeller aperture,

- Profiles of local deck vibration at each resonance location, from port to starboard and from the nearest structural bulkhead aft to the nearest structural bulkhead forward,

- Results of the vibration measurements during manoeuvres, etc.

If required by **TL**, the additional documentation is to be submitted without delay and in full, simultaneously and as a part of the regular measurements report.

7. Acceptance Criteria

7.1 General

7.1.1 Regarding the habitability of a ship by crew and passengers, the highest acceptable levels of local structural vibration are specified in this section.

7.1.2 The highest acceptable levels of vibration for the main propulsion plant, auxiliaries and the machinery compartments are specified in the requirements of Chapter 4, Machinery, Section 1, D.4 and D.8.

7.1.3 The vibration acceptance criteria are usually defined in the ship's specifications. The actual vibration acceptance criteria are to be determined as appropriate, based on the ship owner's and shipbuilder's specifications.

7.2 Vibration limits for habitability

7.2.1 The vibration acceptance criteria are to satisfy the minimum conditions for ship's habitability by crew and passengers. The minimum conditions for ship's habitability are specified by the maximum allowable vibration levels of ISO 6954, given in Table 2.2. The frequency weighting to be used is the combined frequency weighting as defined in ISO 2631-2 given in Table 2.3. **TL** may impose additional restrictions if lower levels of vibration are considered to be necessary.

Table 2.2 Frequency weighted r.m.s. values between 1 Hz and 80 Hz, to be used as the vibration acceptance criteria for the habitability of different areas on a ship

	Ship's Areas					
	Passenger Accommodation		Crew Accommodation		Work Areas	
	Acceleration [mm/s^2]	Velocity [mm/s]	Acceleration [mm/s^2]	Velocity [mm/s]	Acceleration [mm/s^2]	Velocity [mm/s]
Maximum allowable vibration level	143	4	214	6	286	8
Values below which adverse comments are not probable	71,5	2	107	3	143	4
Note: *The vibration levels between the upper and lower values represent the vibration environment commonly experienced and accepted onboard ships.*						

Table 2.3 Combined frequency weighting defined from 1 Hz to 80 Hz, in one third octave bands, calculated using the true mid-frequencies, band limitation included

Frequency [Hz]		Acceleration as input quantity		Velocity as input quantity	
Nominal	True	Weighting Factor	dB	Weighting Factor	dB
1	1.000	0.833	-1.59	0.147	-16.68
1.25	1.259	0.907	-0.85	0.201	-13.94
1.6	1.585	0.934	-0.59	0.260	-11.68
2	1.995	0.932	-0.61	0.327	-9.371
2.5	2.512	0.910	-0.82	0.402	-7.91
3.15	3.162	0.872	-1.19	0.485	-6.28
4	3.981	0.818	-1.74	0.573	-4.83
5	5.012	0.750	-2.50	0.661	-3.59
6.3	6.310	0.669	-3.49	0.743	-2.58
8	7.943	0.582	-4.70	0.813	-1.80
10	10.00	0.494	-6.12	0.869	-1.22
12.5	12.59	0.411	-7.71	0.911	-0.81
16	15.85	0.337	-9.44	0.941	-0.53
20	19.95	0.274	-11.25	0.961	-0.35
25	25.12	0.220	-13.14	0.973	-0.23
31.5	31.62	0.176	-15.09	0.979	-0.18
40	39.81	0.140	-17.10	0.978	-0.20
50	50.12	0.109	-19.23	0.964	-0.32
63	63.10	0.0834	-21.58	0.925	-0.67
80	79.43	0.0604	-24.38	0.844	-1.48

7.2.2 The values are to be expressed in terms of the overall frequency-weighted r.m.s. acceleration (mm/sn^2) and overall frequency-weighted r.m.s. velocity (mm/s) in the range 1 Hz to 80 Hz as shown in Table 2.2. For further information the human sensitivity curve on which the frequency-weighting values of Table 2.3 are based can be found in ISO 6954.

7.2.3 Upon the mutual agreement of the ship's owners and the shipbuilders, additional restrictions on the allowable vibration levels may be introduced depending on the ship type size loading and operating conditions.

7.3 Vibration limits for local structures

7.3.1 The vibration limits for local structures given in this section are to be used as a reference to reduce the risk of structural damage due to excessive vibration under normal operating conditions.

7.3.2 If deemed necessary by **TL**, the following limits of local structural vibration may also apply to vibration levels measured during manoeuvring. Similarly the limits may further be restricted by **TL** under special circumstances.

7.3.3 The application of vibration limits for specific local structures may vary depending on the vessel specification mutually agreed by the shipyard and the ship's owners.

7.3.4 The requirements of 7.3.4.1 and 7.3.4.2 are to be used as basis for determining the acceptable levels of local structural vibrations. For each case the adequacy of these requirements shall be assessed by **TL** separately.

7.3.4.1 For each peak response component in any one of the vertical transverse or longitudinal direction in the frequency interval 1 Hz to 5 Hz, the displacement is recommended not to exceed 1.0 mm and damage is to be expected above 2.0 mm. Displacement values found to be more than 1.0 mm but less than 2.0 mm shall be subject to special approval by **TL**.

7.3.4.2 For each peak response component in any on of the vertical transverse or longitudinal direction in the frequency range 5 Hz and above the velocity is recommended not to exceed 30 mm/sec and damage is to be expected above 60 mm/sec. Velocity values found to be more than 30 mm/sec but less than 60 mm/sec shall be subject to special approval by **TL**.

C. Noise

"The Code on noise levels on board ships" (adopted by resolution MSC.337(91)) is to be applied.

These requirements shall be verified by measurements and reporting in accordance with measurement procedures and Noise Survey Report of the Code following completion of the ship. Measurements are to be conducted, witnessed or assessed by **TL**'s Surveyors. To prevent potential problems, noise levels may be predicted by calculations during construction.

D. Climate Control

1. General

1.1 The criteria for climate control, with a view to provide acceptable standards for ship's crew and passengers, are given in this section.

1.2 The indoors climate control criteria encompass the standards of thermal comfort and ventilation air quality.

1.3 The rules and regulations of this section apply to new built ships as well as ships in service.

1.4 The rules and regulations regarding climate control are applicable to all displacement ships. However, they do not apply to special purpose vessels such as military ships, passenger ferries and cruise ships, yachts, small fishing vessels, tugs, etc. Additional and/or different rules and requirements, given in the relevant sections of **TL** Rules Chapter 1, Hull, apply to special purpose ships mentioned above.

1.5 Additional or special climate control criteria for passenger ferries and cruise ships, chemical tankers, ships carrying dangerous cargo, Ro-Ro ships and the machinery rooms are given separately in the relevant sections of **TL** Rules.

1.6 The measurements for climate control criteria shall be performed on each ship separately even if measurements involve sister ships equipped and fitted identically, with identical load distributions and propulsion systems.

2. International Standards

2.1 The following international standards are recommended as guidance for design and construction of air conditioning and ventilation systems. The latest edition of each standard shall be applied.

- ISO 80000-5, "Quantities and units – Part:5 Thermodynamics".

- ISO 7547, “Shipbuilding – Air conditioning and ventilation of accommodation spaces on board ships – Design conditions and basis of calculations”.

- ISO 8861, “Shipbuilding – Engine room ventilation in diesel-engined ships – Design requirements and basis of calculations”.

- ISO 8862, “Air conditioning and ventilation of machinery control rooms on board ships – Design conditions and basis of calculations”.

- ISO 8864, “Shipbuilding – Air conditioning and ventilation of wheelhouse on board ships – Design conditions and basis of calculations”.

- ISO 9785, “Ships and marine technology – Ventilation of cargo spaces where vehicles with internal combustion engines are driven – Calculation of theoretical total airflow required”.

- ISO 9943, “Shipbuilding – Ventilation and air treatment of galleys and pantries with cooking appliances”.

- ANSI/ASHRAE Standard 62.1-2007, ”Ventilation for Acceptable Indoor Air Quality”.

2.2 The following international standards are recommended as guidance for the determination of thermal comfort in ships. The latest edition of each standard shall be applied.

- ANSI/ASHRAE Standard 55, ”Thermal Environmental Conditions for Human Occupancy”.

- ISO 7547, ”Ships and marine technology — Air conditioning and ventilation of accommodation spaces — Design conditions and basis of calculations”.

- ISO 7726, “Ergonomics of the thermal environment — Instruments for measuring physical quantities”.

- ISO 7730, “Ergonomics of the thermal environment — Analytical determination and interpretation of thermal comfort using calculation of the PMV and PPD indices and local thermal comfort criteria”.

3. Abbreviations

ASHRAE : American Society of Heating, Refrigerating and Air Conditioning Engineers.

RH : Relative Humidity

ISO : International Organization for Standardization

TS : Turkish Standards

HVAC : Heating, Ventilation and Air Conditioning

4. Definitions

The heating, ventilation and air conditioning vocabulary, definitions and units are required to agree with national and/or international standards. Unless stated otherwise, the assumptions, definitions and specifications of the international standards ISO 80000-5 are valid for the purpose of the present section.

Thermal Comfort: An ordinal ranking or subjective index of “that condition of mind which expresses satisfaction with the thermal environment” (ISO 7730).

Ventilation: Ventilation is the process of supplying air to and removing air from any space by natural or mechanical means. From the standpoint of comfort and health, the ventilation issues involve both quantity and quality.

Vertical Gradient: The vertical air temperature difference within an enclosed space. The vertical gradient is used as an indication of potential local discomfort at the head and feet.

Relative Humidity: The ratio of the partial pressure (or density) of the water vapour in the air to the saturation pressure (or density) of water vapour at the same temperature and the same total pressure.

Draught: The unwanted local cooling of the body caused by air movement.

5. Thermal Comfort

5.1 General

5.1.1 The thermal environmental variables covered by this section include the ambient qualities of air temperature, air velocity and relative humidity.

5.1.2 The vertical gradient is chosen for measurement to indicate areas where temperature differentials might exist between a person's head and feet.

5.1.3 This section applies to indoor accommodation and recreation spaces occupied by passengers for 15 minutes or longer at any one time, for example, cabins, staterooms, public seating spaces, dining areas and hospitals. Similarly, manned crew spaces occupied by crew members for 15 minutes or longer at any one time for normal, routine daily activities are covered by this section. Examples of crew spaces include crew accommodation, bridge, engine control room, hospital and indoor workspaces.

5.2 Air temperature and humidity

Assumptions for temperature and humidity levels are as follows:

5.2.1 Air temperature

5.2.1.1 For ACCOM notation

The HVAC system shall be capable of providing a preset return air temperature of 20 to 25°C during winter months and 22 to 27°C during summer months to an HVAC zone for a set of habitable spaces. This temperature shall be maintained by a temperature controller. Each zone shall have a thermostat for reheat and dehumidification purposes.

5.2.1.2 For ACCOM+ notation

The HVAC system shall be capable of sustaining an adjustable range of air temperatures between 20 to 25°C inclusive during winter months and 22 to 27°C during summer months in all indoor manned spaces. This temperature shall be maintained by a temperature controller. Each manned space shall have its own individual controller for temperature regulation.

5.2.2 Relative humidity

A range from 30% minimum to 70% maximum.

5.2.3 Air exchange rate

The rate of air change for enclosed spaces shall be at least 6 complete changes-per-hour. See table 2.4.

5.2.4 Assumptions for temperature and humidity levels other than those given in 5.2.1 and 5.2.3 may be permitted for operation in specially specified ranges of service.

5.2.5 The HVAC system shall be capable of sustaining an adjustable range of air temperature between 18°C and 28°C inclusive, in all manned crew spaces, all passenger accommodation and recreation spaces.

5.2.6 The temperature shall be maintained by a temperature controller. Each manned crew space and passenger cabin shall have its own individual thermostat. For all other accommodation and recreation spaces, a central thermostatic control device shall be provided.

5.2.7 The HVAC system shall be capable of providing and maintaining the relative humidity within a range from 30% minimum to 70% maximum.

5.3 The vertical temperature gradient indoors

The temperature difference between 10 cm above the deck and 170 cm above the deck shall be maintained not to exceed 2°C.

5.4 Air Velocity

5.4.1 The air movement in the occupied areas shall be within the limits shown in Figure 2.1.

5.4.2 Air velocity for the upper value is applicable only in spaces where people are active.

5.4.3 The velocity and direction of the air flow shall be chosen so as to prevent discomforting draughts.

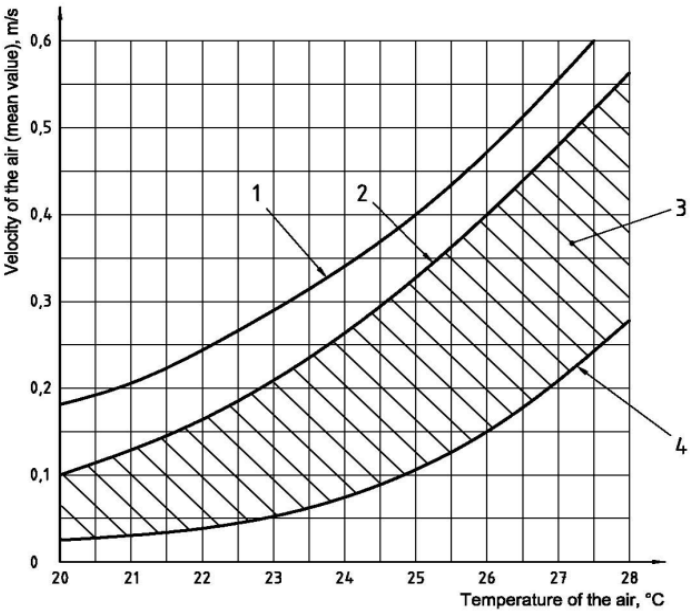

1: Upper value
2: Mean value
3: Suggested air velocity values
4: Lower value

Figure 2.1 Air movement in occupied spaces

6. Ventilation

6.1 The layout of the ventilation plant and duct sizes shall allow air supply without recirculation.

6.2 In hospitals, a non-return flap shall be installed in the supply air duct.

6.3 In laundries and drying and ironing rooms, exhaust air devices shall be installed over areas with high heat emission and high humidity.

6.4 Ventilating equipment shall be designed to keep noise pollution to a tolerable level.

6.5 Ducts, central air handling units, air filters, dust collectors, heat exchangers, reheaters and air terminals shall provide for easy inspections and replacements at regular maintenance intervals.

6.6 Air inlet and air outlet devices shall be provided, for spaces which are ventilated as natural type.

Table 2.4 Air change rates

Ventilated space	Air changes/hour Supply air	Air changes/hour Exhaust air	Remarks
Living/sleeping quarters	6 (8)	-	Value in brackets valid for 20% recirculated air
Messes, saloons, offices	12 (15)	12 (15)	
Hospitals	12	12	
Galleys	12+28 (15+25)	40	
Pantries	15 (20)	15 (20)	
Dry provisions rooms	5 (10)	5 (10)	
Sanitary rooms		10-15	
Laundries	10-20	15-30	
Drying rooms	25	30	

7. Measurements

7.1 General

In this section, the general rules and specific requirements on the instrumentation, measurement, evaluation and reporting procedures for the indoor climate control tests are outlined.

7.2 Instrumentation

The thermal measurement instrumentation shall meet or exceed the minimum properties applicable as specified in ISO 7726 and ISO 7730.

7.3 Measurement Conditions

The measurement of climate control parameters shall satisfy the rules and requirements of this section. Depending on the ship type and operating conditions, the climate control measurements under different measurement conditions shall be subject to approval by **TL**.

The following measurement conditions are provided as reference. **TL** may impose additional requirements if deemed necessary.

7.3.1 Environment conditions

7.3.1.1 If the thermal conditions in the occupied zone have a high sensitivity to time of day and weather conditions, the measurement shall determine the high and low extremes of the thermal parameters.

7.3.1.2 If the vessel changes geographical operational area and the predicted most probable sea state changes significantly, **TL** may require the testing and measurements to be repeated.

7.3.1.3 The measurements report shall include a complete account of the environment conditions prevailing at the time of the measurements.

7.3.2 Equipment operation

7.3.2.1 The HVAC system shall be operating under normal operation conditions or mode.

7.3.2.2 The details of measuring and analysis equipment such as the manufacturer, type and serial number, accuracy, sampling frequency and resolution shall be documented.

7.3.2.3 Copies of the relevant instrumentation reference calibration certificates, together with the results of field setup and calibration checks before and after the field tests, shall be provided.

7.3.3 Indoor arrangement

7.3.3.1 Doors and windows shall be closed, except where they are left open under normal operating conditions. Any open doors or windows shall be noted in the measurements report.

7.3.3.2 The spaces shall be furnished with all usual equipment and furnishings appropriate to that space and any equipment present in that space shall be configured to operate in its normal operating mode.

7.3.3.3 The measurements report shall include a complete account of the indoor arrangement for any given space, prevailing at the time of the measurements.

7.3.4 Personnel

Only the personnel needed for the normal operation of the equipment in the space and those carrying out the measurements shall be present in the space being tested.

7.4 Measurement Locations and Durations

In this section, the requirements for the determination of locations for the climate control testing and measurement durations are outlined. The measurement locations and durations may vary depending on the ship's type and loading condition and **TL** may impose additional requirements when deemed necessary.

7.4.1 Spaces

The climate control parameters shall be measured

- In all accommodation spaces,

- In cabins and hospitals.

Unless stated otherwise, the measurements shall be performed in the middle of the space such as a cabin, mess room, etc..

7.4.2 Transducer positions

For each space identified for testing and measurements, the transducer locations shall be standardized as follows:

- Air temperature and RH measuring instrumentation shall be set up approximately in the middle of the space to measure general space temperature and humidity levels. Air temperature shall be simultaneously measured at approximately 10 cm , 110 cm , and 170 cm above the deck. RH shall be measured at a height of approximately 170 cm above the deck.

- Air velocity data shall be captured in the center of the space, at approximately 10 cm, 110 cm and 170 cm above the deck, as applicable, in spaces where passengers will be lying, seated or standing for 20 minutes or longer, with a view to assuring the air velocity is not excessive at these positions.

7.4.3 Measurement durations

7.4.3.1 The air temperature and humidity measurements shall be made at most every 10 minutes for a minimum period of two 2 hours. The minimum, maximum and average values for the 2 hour period shall be reported for each space measured.

7.4.3.2 The measuring duration for determining the average air velocity at any location shall be 3 minutes.

7.4.3.3 **TL** may impose additional requirements on the measurement durations if the spaces where the measurements are performed have unusual characteristics regarding the climate control needs.

7.5 Measurements Report

7.5.1 The results of the measurement and testing of the climate control system shall be submitted to **TL** in the form of a measurements report. The measurements report may present variations in its format, depending on the measurement conditions, purpose of the measurements, data analysis procedures, etc.

However, the contents of the measurements report shall at least include the results listed below.

The following details shall be provided for each period of testing:

- Loading condition.

- Crew size and total number of persons on board during testing.

- Machinery operating conditions.

- Vessel course, speed, latitude and longitude coordinates during testing.

- Weather conditions and meteorological data such as wind speed and direction, ambient outdoor air temperature, outdoor humidity and barometric pressure.

- Sea state.

- Any indication of abnormal activities or conditions during the test that may distort results.

The following results, per measurement location and sample period as appropriate for notation, shall be provided in table format:

- Measurement position.

- Number of people present in space at time of measurement.

- Measurement period.

- Time at start of measurement.
- Minimum, maximum and average air temperature at 10 cm above deck.
- Minimum, maximum and average air temperature at 110 cm above deck.
- Minimum, maximum and average air temperature at 170 cm above deck.
- Minimum, maximum and average relative humidity at 170 cm above deck.
- Air velocity at 10, 110 and 170 cm above deck.
- Vertical gradient calculated as the average air temperature at 170 cm minus average air temperature at 10 cm above deck.
- Wind speed and direction, ambient outdoor air temperature, outdoor humidity and barometric pressure corresponding to periods of testing and measurements performed indoors.

7.5.2 Depending on the measurement locations and conditions, **TL** may require additional information and documentation. If required by **TL**, the additional documentation is to be submitted without delay and in full, simultaneously and as a part of the regular measurements report.

E. Lighting

1. General

1.1 This section provides criteria for assessing and regulating the luminance levels of general lighting and task lighting in ships.

1.2 Lighting onboard a ship shall be designed to ensure the comfort and facilitate the safety of the occupants.

1.3 The rules and regulations of this section apply to new built ships as well as ships in service.

1.4 The rules and regulations regarding lighting are applicable to all displacement ships. However, the lighting criteria may vary for special purpose vessels such as military ships, passenger ferries and cruise ships, yachts, small fishing vessels, tugs, etc. Such variation of or deviation from the criteria given here applied to special purpose ships mentioned above shall be subject to **TL** approval.

1.5 With respect to requirements for lighting in general, the sleeping cabins, mess rooms and recreational spaces shall be lit by natural light as far as possible. Where lighting by natural light is not possible, these spaces shall be provided with adequate artificial light.

1.6 The present section does not provide rules and regulations for selecting luminaires and lighting accessories for the lighting equipment onboard. For this purpose, the latest edition of IEC 60092-306 may be used. The IP numbers of the lighting units to be installed are given in **TL** Rules, Chapter 5, Electric, Section 1, K.1.

1.7 The rules given in this section does not apply to portable luminaires, navigation lights, search lights, daylight signaling lamps, signal lights including the relevant control and monitoring equipment and other lights used for navigation in general.

1.8 The rules and regulations regarding the classification, marking, mechanical and electrical construction of the lighting systems are given in **TL** Rules, Chapter 5, Electric, Section 11 and as a reference, in IEC 60598-1.

1.9 The measurements and tests for lighting criteria shall be performed on each ship separately even if measurements involve sister ships equipped and fitted identically.

2. International Standards

The following international standards are recognized and extensively used by **TL** in developing the present recommendations, rules and requirements on lighting criteria for ships.

- ASTM F1166-07, " Standard Practice for Human Engineering Design for Marine Systems, Equipment, and Facilities".

- ISO 8995-1 (CIE S 008/E), "Lighting of Indoor work Places".

- IEC 60092-306, "Electrical installations in ships – Part 306: Equipment – Luminaires and lighting accessories".

3. Abbreviations

ASTM : American Society for Testing and Materials

IEC : The International Electrotechnical Commission

ISO : International Organization for Standardization

HVAC : Heating, Ventilation and Air Conditioning

IP : Ingress Protection

IESNA: Illuminating Engineering Society of North America

4. Definitions

The vocabulary, definitions and units used in lighting related documentation are required to agree with the national and/or corresponding international standards.

General Lighting: Lighting primarily designed to provide a uniform level of illuminance throughout an area, exclusive of any provision for special, localized task requirements. Such lighting shall be provided by fixed luminaires.

Task Lighting: Lighting provided to meet the illuminance requirements of a specific task. Task lighting refers to the total illuminance requirement that may be obtained by supplementary lighting provided in addition to the general illuminance. Such lighting may be provided by fixed luminaires or via wall brackets, floor lamps or table lamps.

Task Plane: The horizontal, vertical or inclined plane in which the visual task lies. If no information is available, the task plane shall be considered to be the horizontal and at 75 cm above the deck for seated tasks and at 100 cm above the deck for standing tasks.

5. Lighting Levels

5.1.1 The preferred and minimum allowed levels of illumination at various locations onboard ships shall comply with the requirements of ASTM which are given in Table 2.5. The illumination levels at those locations not cited in Table 2.5, shall be presented to **TL** for special approval.

5.1.2 The illumination level at any location onboard is not allowed to decrease below the minimum illumination level quoted in Table 2.5. This includes the depreciation in illuminance of luminaires and lamps due to age.

6. Emergency Lighting

Emergency lighting is covered in SOLAS and IMO Resolutions and is not considered in the selection of the lighting levels provided in this section. The rules and requirements for the emergency lighting are given in **TL** Rules, Chapter 5, Electric, Section 3, C.

7. Measurements

7.1 General

In this section, the general rules and specific requirements on the instrumentation, measurement, evaluation and reporting procedures for the lighting tests and measurements are outlined.

7.2 Instrumentation

The lighting measurement instrumentation shall meet or exceed the minimum requirements for measuring illuminance, as specified in ISO 8995-1 (CIE S 008/E).

7.3 Measurement Conditions

The prevailing conditions during illuminance measurements shall satisfy the requirements of this section. Depending on the ship type and operating conditions, performing the lighting tests under different measurement conditions shall be subject to approval by **TL**.

The following measurement conditions are provided as reference. **TL** may impose additional requirements if deemed necessary.

7.3.1 Environment Conditions

7.3.1.1 During the measurements, the stray light from the natural or artificial external light sources such as dock lighting, moonlight, etc. shall be masked out as far as practicable. Where it is not possible, measurements of stray light, with all lighting turned off shall be obtained at appropriate positions.

7.3.1.2 Lighting tests and illuminance measurements may be performed in port, at sea, or both, since the measurements shall be regarded to be independent of operating conditions at sea or at port.

7.3.1.3 The measurements report shall include a complete account of the environment conditions prevailing at the time of the illuminance measurements.

7.3.2 Equipment

The details of measuring and analysis equipment such as the manufacturer, type and serial number, accuracy, sampling frequency and resolution shall be documented.

Copies of the relevant instrumentation reference calibration certificates, together with the results of field setup and calibration checks before and after the field tests, shall be provided.

7.3.3 Indoor arrangement

7.3.3.1 Doors and windows shall be closed, except where they are normally left open. Any open doors or windows shall be noted in the measurements report.

7.3.3.2 Spaces shall be furnished with all usual equipment and furnishings normally found in the space.

7.3.3.3 The measurements report shall include a complete account of the indoor arrangement for any given space, prevailing at the time of the measurements.

7.3.4 Personnel

Only the personnel needed for the normal operation of the equipment in the space and those carrying out the measurements shall be present in the space being tested.

7.4 Measurement Times and Locations

7.4.1 In spaces with windows or port lights where the minimum lighting level shall be provided by artificial light sources only in the night time, the lighting measurements shall be performed after dark.

7.4.2 Interior spaces without windows or port lights can be measured during daylight hours.

7.4.3 Measurements of task lighting shall be made as the task is carried out or in the plane of the task surface as defined in 4.

7.4.3.1 For task surfaces smaller than 0.2 m^2, a single measurement shall be taken at the center of the task surface.

7.4.3.2 For task surfaces 0.2 m^2 or larger, the illuminance shall be measured by dividing the task surface into a grid and averaging the measurements taken at the grid intersections.

7.5 Measurements Report

7.5.1 The results of the measurements conducted to determine the illuminance levels shall be presented to **TL** in a report. The format may vary depending on the measurement techniques and conditions, data analysis methods and the purpose of measurements. However, the report shall satisfy the rules and requirements listed below.

Table 2.5 Lighting Levels for Ships

Work Area or Type of Task	Illumination Level		Work Area or Type of Task	Illumination Level	
	Preferred Lux	Minimum Lux		Preferred Lux	Minimum Lux
Assembly (Bench Work)			**Muster Station**	-	200
Course Work Detail	540	325	**Medical Space**		
Medium Work Detail	810	540	Waiting Area	755	540
Precise Work Detail	3230	2155	Exam/Treatment Room	1075	810
Bakery	540	325	**Offices**		
Battery Room	300	200	General	755	540
Bridge	-	325	Computer Workstation	540	300
Business Machine Operation	1075	540	Ordinary Visual Tasks	540	325
Cargo Handling (Weather Decks)	-	150	**Paint Room**		
Chart Room			General	-	325
General Lighting	-	150	Color Matching	-	2155
On Chart Table	1075	810			
Control Rooms			**Pump Room**	340	225
General Lighting	540	-			
Computer Work	300	-	**Purifier Room (Water or Oil)**	500	-
Consoles (front)	540	325	**Passageways (walkways)**	215	150
Consoles (rear)	325	110	**Pump Rows, Valves**	200	-
Compressor / Pump / Generator	300	200	**Radar Room**	-	200
Crane Cab	540	400	**Radio Room**	-	540
Electrical Equip Testing	540	325	**Reading**		
Elevators	325	215	Large Print	325	110
Escape Trunks	-	30	News Print	540	325
Fan Room	-	150	Small Type/Prolonged Reading	755	540
Fire Pump Room	300	200	**Recreation Rooms**	-	300
Food Storage			**Repair Rooms**		
Non-refrigerated	-	200	General Lighting	540	325
Refrigerated	-	100	Instrument Repair	2155	1075
Galley	755	540	**Sanitary Spaces**		
Gyro Room	-	200	General	-	325
HVAC Room	300	200	Sinks and Mirrors	-	540
Instrument Shop	540	325	Toilets	-	150
Laundry			**Service Areas (General)**	210	110
General	-	540	**Shaft Alley**	215	110
Hand Pressing	-	100	**Snack and Coffee Bar**	-	500
Lay Down Areas	-	200	**Stairs and Ladders**	215	110
Laboratory	540	360	**Ship Stores**		
Library	-	540	General Warehouse	110	55
Loading/Off-Loading Area	-	150	Large Parts	200	-
Lounges	-	300	Small Parts	300	-
Manifold Area	-	100	Fine Parts	540	-
Machinery Room	-	200	**Steering Gear Room**	540	300
Machine Shop			**Switchboards**	540	325
General Lighting	540	325	**Tanks**	215	215
Fine Bench Work	1075	745	**Welding/Mechanical Shop**	500	-
Maintenance Platform	-	200	**Windlass Room**	-	100
			Work and Repair Areas	700	-
Mess Room (Cafeteria)	-	300			

The following details shall be provided for each period of testing:

- Power source for lighting during testing.

- Measurement conditions, times and locations.

The following results, per space, shall be provided in table format:

- Name and number of space.

- Task areas in the measured space, if any.

- Lighting level for general lighting.

- Lighting level for task lighting on each task surface or task plane in the measured space.

- Lighting level in cabins and staterooms with lights turned off and curtains, shutters, deadlights, etc. closed.

7.5.2 Actual measurement locations shall be indicated on appropriate drawings.

7.5.3 Depending on the measurement locations and conditions, **TL** may require additional information and documentation. If required by **TL**, the additional documentation is to be submitted without delay and in full, simultaneously and as a part of the regular measurements report.

F. Accommodatıon

1. General

1.1 There shall be adequate headroom in all seafarer accommodation; the minimum permitted headroom in all seafarer accommodation where full and free movement is necessary shall be not less than 203 cm (80 in.). The competent authority may permit some limited reduction in headroom in any space, or part of any space in such accommodation where it is satisfied that such reduction is reasonable and will not result in discomfort to the seafarers.

1.2 The accommodations shall be adequately insulated (insulation relating to noise and indoor climatic variables are addressed in C. Noise and D. Climate Control.

There shall be no direct openings into sleeping rooms from cargo and machinery spaces or from galleys, storerooms, drying rooms or communal sanitary areas.

1.3 That part of a bulkhead separating such places from sleeping rooms and external bulkheads shall be efficiently constructed of steel or other approved substance and be watertight and gas-tight.

1.4 The materials used to construct internal bulkheads, paneling and sheeting, floors and joining shall be suitable for the purpose and conducive to ensuring a healthy environment.

The bulkhead surfaces and deck heads are to be of material with a surface easily kept clean. No form of construction likely to harbor vermin is to be used.

The bulkhead surfaces and deck heads in sleeping rooms and mess rooms shall be capable of being easily kept clean and light in color with a durable, nontoxic finish.

The decks in all seafarer accommodation are to be of approved material and construction and shall provide a non-slip surface impervious to damp and easily kept clean.

Where the floorings are made of composite materials, the joints with the sides shall be profiled to avoid crevices.

Deck coverings (e.g., mats, carpeting, etc.) shall be supplied where slipping is possible due to occasional water, oil, or liquid on the floors.

1.5 Proper lighting (addressed in E. Lighting and sufficient draining shall be provided.

Deck drains shall be considered in all food service areas subject to flood type cleaning or where normal operations release or discharge water or other liquid onto the deck.

Deck drains for food service areas shall be considered in number and location so that complete drainage is possible under normal conditions of list and trim. There shall be no deck drains inside provision rooms except the thaw room. Deck drains shall be provided in the laundry.

1.6 Accommodation and recreational and catering facilities shall meet the requirements in Regulation 4.3, and the related provisions in the Maritime Labour Convention, 2006 – The Regulations and the Code, on health and safety protection and accident prevention, with respect to preventing the risk of exposure to hazardous levels of noise and vibration and other ambient factors and chemicals on board ships, and to provide an acceptable occupational and on-board living environment for seafarers. (hazardous levels of vibration, noise and the ambient environment qualities of indoor climate and lighting are addressed in B. Vibration, C. Noise, D. Climate Control and E. Lighting.

2. Ventilation and Heating

2.1 Sleeping rooms and mess rooms shall be adequately ventilated (addressed in D. Climate Control).

2.2 Ships, except those regularly engaged in trade where temperate climatic conditions do not require this, shall be equipped with air conditioning for seafarer accommodation, for any separate radio room and for any centralized machinery control room (addressed in D. Climate Control).

2.3 Adequate heat through an appropriate heating system shall be provided, except in ships exclusively on voyages in tropical climates (addressed in D. Climate Control).

2.4 With respect to requirements for lighting, subject to such special arrangements as may be permitted in passenger ships, sleeping rooms and mess rooms shall be lit by natural light and provided with adequate artificial light." (artificial light is addressed in Section 6, "E.Lighting").

2.5 With respect to requirements for hospital accommodation, ships carrying 15 or more seafarers and engaged in a voyage of more than three days' duration shall provide separate hospital accommodation to be used exclusively for medical purposes; the competent authority may relax this requirement for ships engaged in coastal trade; in approving on-board hospital accommodation, the competent authority shall ensure that the accommodation will, in all weathers, be easy of access, provide comfortable housing for the occupants and be conducive to their receiving prompt and proper attention.

2.6 All ships shall be provided with separate offices or a common ship's office for use by deck and engine departments; ships of less than 3,000 gross tonnage may be exempted by the competent authority from this requirement after consultation with the ship owners' and seafarers' organizations concerned.

2.7 Ships regularly trading to mosquito-infested ports shall be fitted with appropriate devices as required by the competent authority.
Suitable screens are to be provided, as appropriate, for side scuttles, ventilators, and doors to the open deck.

3. Berthing

3.1 In ships other than passenger ships, as defined in Regulation 2(e) and (f) of the International Convention for the Safety of Life at Sea, 1974, as amended (the "SOLAS Convention"), sleeping rooms shall be situated above the load line amidships or aft, except that in exceptional cases, where the size, type or intended service of the ship renders any other location impracticable, sleeping rooms may be located in the fore part of the ship, but in no case forward of the collision bulkhead.

3.2 In passenger ships, and in special ships constructed in compliance with the IMO Code of Safety for Special Purpose Ships, 1983, and subsequent versions (hereinafter called "special purpose ships"), the competent authority may, on condition that satisfactory arrangements are made for lighting and ventilation, permit the location of sleeping rooms below the load line, but in no case shall they be located immediately beneath working alleyways.

Accommodation and recreational and catering facilities shall be located as far as practicable from the engines, steering gear rooms, deck winches, ventilation, heating, and air-conditioning equipment, and other noisy machinery and apparatus.

The system of ventilation for sleeping rooms and mess rooms shall be controlled so as to maintain the air in a satisfactory condition and to ensure a sufficiency of air movement in all conditions of weather and climate.

3.3 In ships other than passenger ships, an individual sleeping room shall be provided for each seafarer; in the case of ships of less than 3,000 gross tonnage or special purpose ships, exemptions from this requirement may be granted by the competent authority after consultation with the ship owners' and seafarers' organizations concerned.

3.4 There shall be adequate berth arrangements on board, making it as comfortable as possible for the seafarer and any partner who may accompany the seafarer.

Separate sleeping rooms shall be provided for men and for women.

As far as practicable, sleeping rooms of seafarers shall be so arranged that watches are separated and that no seafarers working during the day share a room with watch keepers.

3.5 Sleeping rooms shall be of adequate size and properly equipped so as to ensure reasonable comfort and to facilitate tidiness. (Room size is covered in requirements 3.7, 3.8 and 3.9

Space occupied by berths and lockers, chests of drawers and seats shall be included in the measurement of the floor area. Small or irregularly shaped spaces which do not add effectively to the space available for free movement and cannot be used for installing furniture shall be excluded.

Outfitting for sleeping rooms shall, in addition to berths and lockers, contain the following:

- A table and chair,
- A mirror with a light,
- A small cabinet for toilet requisites for each person in the room,
- A book rack,
- Coat hooks.

An electric reading light at the head of each berth.

3.6 A separate berth for each seafarer shall in all circumstances be provided; the minimum inside dimensions of a berth shall be at least 198 cm by 80 cm.

The berth shall be at least 300 mm above the deck.

Head clearance above each berth shall be at least 610 mm.

The framework and leeboard of a berth shall be of approved material, hard, smooth, and not likely to corrode or to harbor vermin.

Berths constructed from tubular frames shall be completely sealed and without perforations which would give access to vermin.

3.7 In single berth seafarers' sleeping rooms the floor area shall not be less than:

- 4.5 m^2 in ships of less than 3,000 gross tonnage;
- 5.5 m^2 in ships of 3,000 gross tonnage or over but less than 10,000 gross tonnage;
- 7 m^2 in ships of 10,000 gross tonnage or over.

3.8 However, in order to provide single berth sleeping rooms on ships of less than 3,000 gross tonnage, passenger ships and special purpose ships, the competent authority may allow a reduced floor area.

3.9 In ships of less than 3,000 gross tonnage other than passenger ships and special purpose ships, sleeping rooms may be occupied by a maximum of two seafarers; the floor area of such sleeping rooms shall not be less than 7 m^2.

3.10 On passenger ships and special purpose ships the floor area of sleeping rooms for seafarers not performing the duties of ships' officers shall not be less than:

- 7.5 m^2 (80.73 ft^2) in rooms accommodating two persons;

- 11.5 m^2 (123.78 ft^2) in rooms accommodating three persons;

- 14.5 m^2 (156.08 ft^2) in rooms accommodating four persons.

3.11 On special purpose ships sleeping rooms may accommodate more than four persons; the floor area of such sleeping rooms shall not be less than 3.6 m^2 (38.75 ft^2) per person.

3.12 On ships other than passenger ships and special purpose ships, sleeping rooms for seafarers who perform the duties of ships' officers, where no private sitting room or day room is provided, the floor area per person shall not be less than:

- 7.5 m^2 (80.73 ft^2) in ships of less than 3,000 gross tonnage;

- 8.5 m^2 (91.49 ft^2) in ships of 3,000 gross tonnage or over but less than 10,000 gross tonnage;

- 10 m^2 (107.64 ft^2) in ships of 10,000 gross tonnage or over.

3.13 On passenger ships and special purpose ships the floor area for seafarers performing the duties of ships' officers where no private sitting room or day room is provided, the floor area per person for junior officers shall not be less than

- 7.5 m^2 (80.73 ft^2);

- For senior officers not less than 8.5 m^2 (91.49 ft^2);

- Junior officers are understood to be at the operational level, and senior officers at the management level.

3.14 The master, the chief engineer and the chief navigating officer shall have, in addition to their sleeping rooms, an adjoining sitting room, day room or equivalent additional space; ships of less than 3,000 gross tonnage may be exempted by the competent authority from this requirement after consultation with the ship owners' and seafarers' organizations concerned.

When applicable, requirements above will be requested for 1st officer as well.

3.15 For each occupant, the furniture shall include a clothes locker of ample space, minimum 475 liters or 0.475 m^3 (16.77 ft^3), or and a drawer or equivalent space of not less than 56 liters; if the drawer is incorporated in the clothes locker then the combined minimum volume of the clothes locker shall be 500 liters; it shall be fitted with a shelf and be able to be locked by the occupant so as to ensure privacy.

3.16 Each sleeping room shall be provided with a table or desk, which may be of the fixed, drop-leaf or slide-out type, and with comfortable seating accommodation as necessary.

4. Food Service

4.1 Mess rooms shall be located apart from the sleeping rooms and as close as practicable to the galley; ships of less than 3,000 gross tonnage may be exempted by the competent authority from this requirement after consultation with the ship owners' and seafarers' organizations concerned.

Mess lines and mess rooms are protected from weather, objectionable sights (such as garbage disposal areas), and objectionable odors (such as from engines, holds, toilets, fire room, etc.).

4.2 Mess rooms shall be of adequate size and comfort and properly furnished and equipped (including ongoing facilities for refreshment), taking account of the number of seafarers likely to use them at any one time; provision shall be made for separate or common mess room facilities as appropriate.

Mess room facilities may be either common or separate. The decision in this respect shall be taken after consultation with seafarers' and ship owners' representatives and subject to the approval of the competent authority. Account shall be taken of factors such as the size of the ship and the distinctive cultural, religious and social needs of the seafarers.

On ships other than passenger ships, the floor area of mess rooms for seafarers shall be not less than 1.5 m^2 per person of the planned seating capacity.

There shall be available at all times when seafarers are on board:

- A refrigerator, which shall be conveniently situated and of sufficient capacity for the number of persons using the mess room or mess rooms;
- Facilities for hot beverages; and
- Cool water facilities.

Where available pantries are not accessible to mess rooms, adequate lockers for mess utensils and proper facilities for washing utensils shall be provided.

Mess rooms have tables and seats sufficient for the number of persons likely to use them at any one time.
The tops of tables and seating are capable of being easily cleaned.

Sufficient storage for dry, refrigerated, and frozen food is provided based on the estimated mass and associated volume based on the duration of the voyage or normal food stores replenishment schedules.

Adequate lockers for mess utensils are provided.

5. Sanitary Spaces

5.1 All sanitary spaces shall have ventilation to the open air, independently of any other part of the accommodation.

Sanitary accommodation intended for the use of more than one person shall comply with the following: the accommodation shall be sufficiently lit, heated, and ventilated.

All toilet spaces shall be ventilated sufficiently to be reasonably free of disagreeable odors and condensation.

5.2 All seafarers shall have convenient access on the ship to sanitary facilities meeting minimum standards of health and hygiene and reasonable standards of comfort, with separate sanitary facilities being provided for men and for women.

Toilets shall be situated convenient to, but separate from, sleeping rooms and wash rooms, without direct access from the sleeping rooms or from a passage between sleeping rooms and toilets to which there is no other access; this requirement does not apply where a toilet is located in a compartment between two sleeping rooms having a total of not more than four seafarers; and where there is more than one toilet in a compartment, they shall be sufficiently screened to ensure privacy.

Sanitary spaces shall be gender identifiable without entering the space.

All toilets shall have flush water available at all times and have a hand washing station.

Water heaters supplying showers shall not support areas that have higher water temperature requirements, such as food service areas. If they do, then anti-scalding devices shall be provided.

Floors in sanitary spaces shall have a non-slip type deck covering and be easily cleaned.

Bulkheads in sanitary spaces shall be made of steel or other approved material and be watertight up to 230 mm (9 inches) above deck level.

A public sanitary facility shall be situated convenient to vessel control rooms.

5.3 There shall be sanitary facilities within easy access of the navigating bridge and the machinery space or near the engine room control centre; ships of less than 3,000 gross tonnage may be exempted by the competent authority from this requirement after consultation with the ship owners' and seafarers' organizations concerned.

The sanitary facility shall contain a toilet and washbasin having hot and cold running potable water.

A public sanitary facility shall be situated near the ship's office if it is not conveniently located near the navigation bridge.

5.4 In all ships a minimum of one toilet, one wash basin and one tub or shower or both for every six persons or less who do not have personal facilities shall be provided at a convenient location.

5.5 With the exception of passenger ships, each sleeping room shall be provided with a washbasin having hot and cold running fresh water, except where such a washbasin is situated in the private bathroom provided.

5.6 Hot and cold running fresh water shall be available in all wash places.

Water heaters supplying washbasins and showers shall not support areas that have higher water temperature requirements, such as food service areas. If they do, then anti-scalding devices shall be provided.

6. Recreation

6.1 All ships shall have a space or spaces on open deck to which the seafarers can have access when off duty, which are of adequate area having regard to the size of the ship and the number of seafarers on board.

6.2 Appropriate seafarers' recreational facilities, amenities and services, as adapted to meet the special needs of seafarers who must live and work on ships, shall be provided on board for the benefit of all seafarers, taking into account Regulation 4.3 and the associated Maritime Labour Convention, 2006 – The Regulations and the Code provisions on health and safety protection and accident prevention.

Furnishings for recreational facilities shall as a minimum include a bookcase and facilities for reading, writing and, where practicable, games.

Consideration shall also be given to including the following facilities at no cost to the seafarer, where practicable:

- A smoking room;
- Television viewing and the reception of radio broadcasts;
- Showing of films, the stock of which shall be adequate for the duration of the voyage and, where necessary, changed at reasonable intervals;
- Sports equipment including exercise equipment, table games, and deck games;
- Where possible, facilities for swimming;
- A library containing vocational and other books, the stock of which shall be adequate for the duration of the voyage and changed at reasonable intervals;
- Facilities for recreational handicrafts;
- Electronic equipment such as a radio, television, video recorders, DVD/CD player, personal computer and software, and cassette recorder/player;
- Where appropriate, the provision of bars on board for seafarers unless these are contrary to national, religious, or social customs; and

- Reasonable access to ship-to-shore telephone communications, and email and Internet facilities, where available, with any charges for the use of these services being reasonable in amount.

7. Laundry

7.1 Appropriately situated and furnished laundry facilities shall be available.

The laundry facilities provided for seafarers' use shall include:

- Washing machines;
- Drying machines or adequately heated and ventilated drying rooms; and
- Irons and ironing boards or their equivalent.

Facilities exist for washing and drying clothes on a scale appropriate to the size of the crew and the normal duration of the voyage.

Laundry facilities shall be sufficient to allow seafarers to be provided with clean and dry underwear once per day and clean and dry outerwear and bedding once per five (5) days.

Washers and dryers (if provided) are placed relative to each other to facilitate the transfer of clothing from the washer to the dryer and their capacities shall be matched.

Air vents from laundry space shall not re-circulate in the vessel.

SECTION 3

DESIGN PRINCIPLES

A. Materials

1. General

All materials to be used for the structural members designed according to the **TL** Hull Construction Rules are to conform to the **TL** Rules for Materials. Materials with different properties and characteristics may be accepted, provided that their specifications describing the chemical composition, mechanical properties, welding properties, manufacturing techniques, etc. are submitted to **TL** for approval.

2. Hull Structural Steel for Plates and Sections

2.1 Ordinary Hull Structural Steel

2.1.1 Ordinary hull structural steel is a hull structural steel with a minimum nominal upper yield point R_{eH} of 235 N/mm^2 and a tensile strength of 400 - 520 N/mm^2.

2.1.2 The material factor **k** in the formulae of the following sections is to be assigned 1.0 for the ordinary hull structural steel.

2.1.3 Ordinary hull structural steel is grouped into the grades **TL**-A, **TL**-B, **TL**-D, **TL**-E, which differ from each other in their toughness properties. Rules and requirements for the application of the individual grades to the hull structural members are provided in 2.3.

2.1.4 If for special structures the use of steels with yield properties less than 235 N/mm^2 has been accepted, the material factor k is to be determined by,

$$k = \frac{235}{R_{eH}}$$

2.2 Higher Tensile Hull Structural Steels

2.2.1 Higher tensile hull structural steel is a hull structural steel, the yield and tensile properties of which exceed those of ordinary hull structural steel. According to the Rules for Materials, for three groups of higher tensile hull structural steels the nominal upper yield stress R_{eH} is fixed at 315, 355 and 390 N/mm^2 respectively. Where higher tensile hull structural steel is used, the following values of the material factor **k** are to be used for the purpose of determining scantlings.

Table 3.1 Material factor k

R_{eH} [N/mm^2]	k
315	0.78
355	0.72
390	0.68

For the higher tensile hull structural steels with other nominal yield stresses, the material factor **k** may be determined by the following formula:

$$k = \frac{295}{R_{eH} + 60}$$

Warning:
When higher tensile structural steels are used, the permissible stress value may be restricted by the buckling and fatigue strength criteria.

2.2.2 Higher tensile hull structural steel is grouped into the following grades, which differ from each other in their toughness properties: **TL**-AH 32/36/40, **TL**-DH 32/36/40, **TL**-EH 32/36/40/47 and **TL**-FH 32/36/40.

Note: *For provisions related to **TL**-EH47, Chapter 2 Material Section 3 J is to be applied.*

2.2.3 Where structural members are completely or partly made from higher tensile hull structural steel, a suitable notation will be entered into the ship's certificate.

2.2.4 The structural members made of high tensile steel shall be identified in the drawings submitted for approval. These drawings are to be placed on board in case any repairs are to be carried out.

2.2.5 Regarding the rules and requirements for welding higher tensile hull structural steel, Chapter 3, Welding apply.

2.3 Material Selection for the Hull

2.3.1 Material classes

For the material selection for hull structural members, material classes as given in Table 3.2 are defined.

2.3.2 Material selection for longitudinal structural members

Materials in the various strength members are not to be

of lower grade than those corresponding to the material classes and grades specified in Table 3.2 to Table 3.8. General requirements are given in Table 3.2, while additional minimum requirements are given in the following:

Table 3.3: For ships, excluding liquefied gas carriers covered in Table 3.4, with length exceeding 150 m and single strength deck,

Table 3.4: for membrane type liquefied gas carriers with length exceeding 150 m,

Table 3.5: For ships with length exceeding 250 m,

Table 3.6: For single side bulk carriers subjected to SOLAS regulation XII/6.4.3,

Table 3.7: For ships with ice strengthening.

The material grade requirements for hull members of each class depending on the thickness are defined in Table 3.8.

For strength members not mentioned in Tables 3.2 to 3.7, Grade A/AH may generally be used. The steel grade is to correspond to the as-built plate thickness and material class.

Plating materials for stern frames supporting the rudder and propeller boss, rudders, rudder horns and shaft brackets are in general not to be of lower grades than corresponding to Class II. For rudder and rudder body plates subjected to stress concentrations (e.g. in way of lower support of semi-spade rudders or at upper part of spade rudders) Class III is to be applied.

2.3.3 Material selection for local structural members

2.3.3.1 The material selection for local structural members, which are not part of the longitudinal hull structure, may in general be effected according to Table 3.9. For parts made of forged steel or cast steel 3 is to be applied.

2.3.3.2 Rudder body plates, which are subjected to stress concentrations (e.g. in way of lower support of semi-spade rudders), are to be of class III material.

2.3.3.3 For members not specifically mentioned, grade A/AH may normally be used. However, TL may require higher grades depending on the stress level.

2.3.3.4 For top plates of machinery foundations located outside 0.6 **L** amidships, grade A ordinary hull structural steel may also be used for thicknesses above 40 mm.

2.3.4 Material selection for structural members exposed to low temperatures

2.3.4.1 The material selection for structural members which are continuously exposed to temperatures below 0°C, e.g. in or adjacent to refrigerated cargo holds, is governed by the design temperature of the structural members. The design temperature is determined by a statistical calculation taking into account the temperature variation in the design environment. The design environmental temperatures for unrestricted service are

Air : + 5 °C

Sea water : 0 °C.

2.3.4.2 For ships intended to operate permanently in areas with low air temperatures (below and including -20°C, e.g. regular service during winter seasons to Arctic or Antarctic waters), the materials in exposed structures are to be selected based on the design temperature t_D, to be taken as defined in 2.3.4.5.

Materials in the various strength members above the lowest ballast water line (BWL) exposed to air are not to be of lower grades than those corresponding to Classes I, II and III, as given in Table 3.10, depending on the categories of structural members (SECONDARY, PRIMARY and SPECIAL). For non-exposed structures (except as indicated in Note (6) of Table 3.10) and structures below the lowest ballast water line, 2.3.2 and 2.3.3 apply.

2.3.4.3 The material grade requirements for each material class depending on thickness and design temperature are defined in Table 3.11. For design temperatures below -55°C (t_D < -55°C), special materials shall be considered.

2.3.4.4 Single strakes required to be of class III or of grade E/EH or FH are to have breadths not less than 800+5 · **L** mm, but not exceeding 1800 mm.

Plating materials for stern frames, rudder horns, rudders and shaft brackets are not to be of lower grades than those corresponding to the material classes given in 2.3.3.

Table 3.2 Material classes and grades for ships in general

Structural member category	Material class / grade
Secondary: **1.** Longitudinal bulkhead strakes, other than that belonging to the Primary category **2.** Deck plating exposed to weather, other than that belonging to the Primary or Special category **3.** Side plating	- Class I within 0.4 L amidships - Grade A/AH outside 0.4 L amidships
Primary: **1.** Bottom plating, including keel plate **2.** Strength deck plating, excluding that belonging to the Special category **3.** Continuous longitudinal plating of strength members above strength deck, excluding hatch coamings **4.** Uppermost strake in longitudinal bulkhead **5.** Vertical strake (hatch side girder) and uppermost sloped strake in top wing tank	- Class II within 0.4 L amidships - Grade A/AH outside 0.4 L amidships
Special: **1.** Sheer strake at strength deck **(1)** **2.** Stringer plate in strength deck **(1)** **3.** Deck strake at longitudinal bulkhead, excluding deck plating in way of inner-skin bulkhead of double-hull ships **(1)**	- Class III within 0.4 L amidships - Class II outside 0.4 L amidships - Class I outside 0.6 L amidships
4. Strength deck plating at outboard corners of cargo hatch openings in container carriers and other ships with similar hatch opening configurations	- Class III within 0.4 L amidships - Class II outside 0.4 L amidships - Class I outside 0.6 L amidships - Minimum Class III within cargo region
5. Strength deck plating at corners of cargo hatch openings in bulk carriers, ore carriers, combination carriers and other ships with similar hatch opening configurations **5.1** Trunk deck and inner deck plating at corners of openings for liquid and gas domes in membrane type liquefied gas carriers	- Class III within 0.6 L amidships - Class II within rest of cargo region
6. Bilge strake in ships with double bottom over the full breadth and length less than 150 m **(1)**	- Class II within 0.6 L amidships - Class I outside 0.6 L amidships
7. Bilge strake in other ships **(1)**	- Class III within 0.4 L amidships - Class II outside 0.4 L amidships - Class I outside 0.6 L amidships
8. Longitudinal hatch coamings of length greater than 0.15 L including coaming top plate and flange **9.** End brackets and deck house transition of longitudinal cargo hatch coamings	- Class III within 0.4 L amidships - Class II outside 0.4 L amidships - Class I outside 0.6 L amidships - Not to be less than grade D/DH
(1) *Single strakes required to be of Class III within 0.4 L amidships are to have breadths not less than 800 + 5 L [mm], but not greater than 1800 mm, unless limited by the geometry of the ship's design.*	

Table 3.3 Minimum material grades for ships, excluding liquefied gas carriers covered in Table 3.4, with length exceeding 150 m and single strength deck

Structural member category	Material grade
• Longitudinal plating of strength deck where contributing to longitudinal strength • Continuous longitudinal plating of strength members above strength deck	Grade B/AH within 0.4 L amidships
Single side strakes for ships without inner continuous longitudinal bulkhead(s) between bottom and the strength deck	Grade B/AH within cargo region

Table 3.4 Minimum Material Grades for membrane type liquefied gas carriers with length exceeding 150 m (1)

Structural member category		Material grade
Longitudinal plating of strength deck where contributing to the longitudinal strength		Grade B/AH within 0.4L amidships
Continuous longitudinal plating of strength members above the strength deck	Trunk deck plating	Class II within 0.4L amidships
	• Inner deck plating • Longitudinal strength member plating between the trunk deck and inner deck	Grade B/AH within 0.4L amidships
(1) Table 3.4 is applicable to membrane type liquefied gas carriers with deck arrangements as shown in Figure 3.1. Table 3.4 may apply to similar ship types with a “double deck” arrangement above the strength deck.		

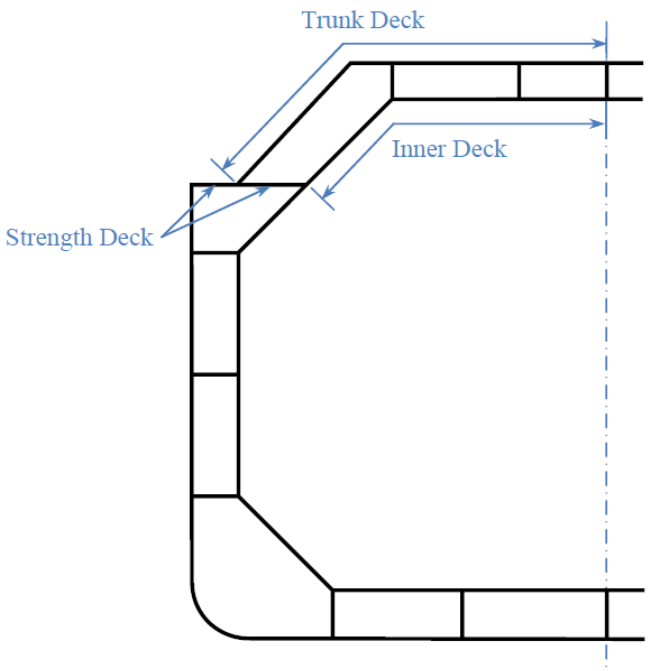

Figure 3.1 Typical deck arrangement for membrane type Liquefied Natural Gas Carriers

Table 3.5 Minimum material grades for ships with length exceeding 250 m

Structural member category	Material grade
Shear strake at strength deck **(1)**	Grade E/EH within 0.4 L amidships
Stringer plate in strength deck **(1)**	Grade E/EH within 0.4 L amidships
Bilge strake **(1)**	Grade D/DH within 0.4 L amidships

(1) *Single strakes required to be of Grade E/EH and within 0.4 L amidships are to have breadths not less than 800 + 5 L [mm], need not be greater than 1800 mm, unless limited by the geometry of the ship's design.*

Table 3.6 Minimum material grades for single-side skin bulk carriers subjected to SOLAS regulation XII/6.4.3

Structural member category	Material grade
Lower bracket of ordinary side frame **(1) (2)**	Grade D/DH
Side shell strakes included totally or partially between the two points located to 0.125 ℓ above and below the intersection of side shell and bilge hopper sloping plate or inner bottom plate **(2)**	Grade D/DH

(1) *The term "lower bracket" means webs of lower brackets and webs of the lower part of side frames up to the point of 0.125 ℓ above the intersection of side shell and bilge hopper sloping plate or inner bottom plate.*

(2) *The span of the side frame ℓ is defined as the distance between the supporting structures.*

Table 3.7 Minimum material grades for ships with ice strengthening

Structural member category	Material grade
Shell strakes in way of ice strengthening area for plates	Grade B/AH

Table 3.8 Steel grades to be used, depending on plate thickness and material class

Thickness t [mm] (1)		**> 15**	**> 20**	**> 25**	**> 30**	**> 35**	**> 40**	**> 50**
Material class	**≤ 15**	**≤ 20**	**≤ 25**	**≤ 30**	**≤ 35**	**≤ 40**	**≤ 50**	**≤ 100 (3)**
I	A/AH	A/AH	A/AH	A/AH	B/AH	B/AH	D/DH	D/DH **(2)**
II	A/AH	A/AH	B/AH	D/DH	D/DH **(4)**	D/DH **(4)**	E/EH	E/EH
III	A/AH	B/AH	D/AH	D/DH **(4)**	E/EH	E/EH	E/EH	E/EH

(1) *Actual thickness of the structural member.*

(2) *For thickness t > 60 mm. E/EH.*

(3) *For thickness t > 100 mm. the steel grade is to be agreed with* ***TL****.*

(4) *For nominal yield stresses* $R_{eH} \geq 390$ *N/mm*^{2} *, EH.*

Table 3.9 Material selection for local structural members

Structural member	Material class
Hawse pipe, stern tube, pipe stanchion **(3)**	I
Face plates and webs of girder systems, hatch covers	II **(1)**
Rudder body **(2)**, rudder horn, sole piece, stern frame, propeller brackets	II

(1) *Class I material sufficient, where rolled sections are used or the parts are machine cut from normalized, rolled-normalized or rolled thermo-mechanical plates.*

(2) *See 2.3.3.2*

(3) *For pipe stanchions for cargo reefer holds, Table 3.11 is applicable.*

Table 3.10 Material classes and grades for structures exposed to low temperatures

Structural member category	Material class	
	Within 0.4L amidships	Outside 0.4L amidships
SECONDARY : - Deck plating exposed to weather, in general - Side plating above BWL **(5)** - Transverse bulkheads above BWL **(5)(6)**	I	I
PRIMARY: - Strength deck plating **(1)** - Continuous longitudinal members above strength deck, excluding longitudinal hatch coamings - Longitudinal bulkhead above BWL **(5) (6)** - Top wing tank plating above BWL **(5) (6)**	II	I
SPECIAL : - Sheer strake at strength deck **(2)** - Stringer plate in strength deck **(2)** - Deck strake at longitudinal bulkhead **(3)** - Continuous longitudinal hatch coamings **(4)**	III	II

(1) *Plating at corners of large hatch openings to be specially considered. Class III or grade E/EH to be applied in positions where high local stresses may occur.*

(2) *Not to be less than grade E/EH within 0.4L amidships in ships with length exceeding 250 meters.*

(3) *In ships with breadth exceeding 70 meters at least three deck strakes to be of class III.*

(4) *Not to be less than grade D/DH..*

(5) *BWL = ballast water line.*

(6) *Applicable to plating attached to hull envelope plating exposed to low air temperature. At least one strake is to be considered in the same way as exposed plating and the strake width is to be at least 600 mm.*

2.3.4.5 The design temperature t_D is to be taken as the lowest mean daily average air temperature in the area of operation, (see Figure 3.2). The following definitions apply:

Mean : Statistical mean over an observation period

Average : Average during one day and night.

Lowest : Lowest during year.

For seasonally restricted service, the lowest expected value within the period of operation applies.

For the purpose of issuing a Polar Ship Certificate in accordance with the Polar Code, the design temperature t_D shall be no more than 13°C higher than the Polar Service Temperature (PST) of the ship.

In the Polar Regions, the statistical mean over observation period is to be determined for a period of at least 10 years.

2.4 Structural Members Stressed in the Direction of Their Thickness

In case of high local stresses in the thickness direction, e.g. due to shrinkage stresses in single bevel or double bevel T-joints with a large volume of weld metal, steels with guaranteed material properties in the thickness direction according to the Chapter 2, Rules for Materials are to be used.

Table 3.11 Material grade requirements for classes I, II and III at low temperatures

Class I				
Plate thickness [mm]	**t_D -20 / -25 °C**	**t_D -26 / -35 °C**	**t_D -36 / -45 °C**	**t_D -46 / -55 °C**
t ≤ 10	A / AH	B / AH	D / DH	D / DH
10 < t ≤ 15	B / AH	D / DH	D / DH	D / DH
15 < t ≤ 20	B / AH	D / DH	D / DH	E / EH
20 < t ≤ 25	D / DH	D / DH	D / DH	E / EH
25 < t ≤ 30	D / DH	D / DH	E / EH	E / EH
30 < t ≤ 35	D / DH	D / DH	E / EH	E / EH
35 < t ≤ 45	D / DH	E / EH	E / EH	FH
45 < t ≤ 50	E / EH	E / EH	FH	FH
Class II				
Plate thickness [mm]	**t_D -20 / -25 °C**	**t_D -26 / -35 °C**	**t_D -36 / -45 °C**	**t_D -46 / -55 °C**
t ≤ 10	B / AH	D / DH	D / DH	E / EH
10 < t ≤ 20	D / DH	D / DH	E / EH	E / EH
20 < t ≤ 30	D / DH	E / EH	E / EH	FH
30 < t ≤ 40	E / EH	E / EH	FH	FH
40 < t ≤ 45	E / EH	FH	FH	
45 < t ≤ 50	E / EH	FH	FH	
Class III				
Plate thickness [mm]	**t_D -20 / -25 °C**	**t_D -26 / -35 °C**	**t_D -36 / -45 °C**	**t_D -46 / -55 °C**
t ≤ 10	D / DH	D / DH	E / EH	E / EH
10 < t ≤ 20	D / DH	E / EH	E / EH	FH
20 < t ≤ 25	E / EH	E / EH	E / FH	FH
25 < t ≤ 30	E / EH	E / EH	FH	FH
30 < t ≤ 35	E / EH	FH	FH	
35 < t ≤ 40	E / EH	FH	FH	
40 < t ≤ 50	FH	FH		

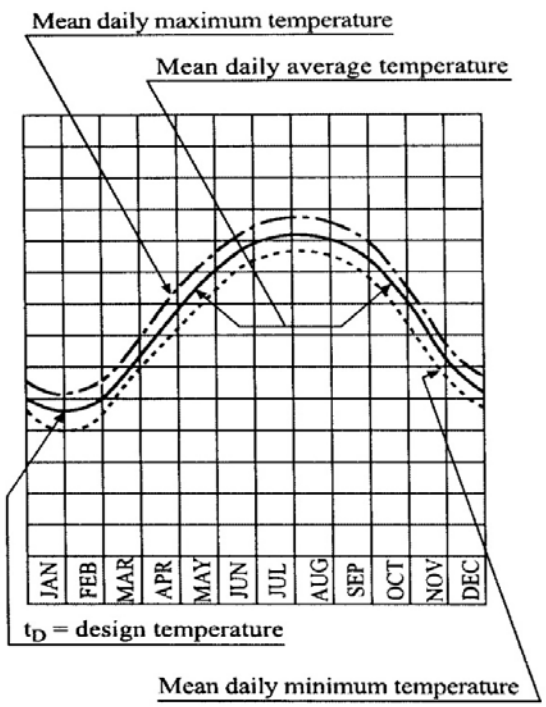

Figure 3.2 Commonly used definitions of temperatures

3. Forged Steel and Cast Steel

Forged steel and cast steel for stem, stern frame, rudder post as well as other structural components, which are subject of this Rule, are to comply with the **TL** Chapter 2, Materials. The tensile strength of forged steel and of cast steel is not to be less than 400 N/mm^2. Forged steel and cast steel are to be selected by considering the requirements of 2.3. In this respect, beside strength properties, the toughness requirement and suitability for welding shall be satisfied.

4. Aluminium Alloys

4.1 General

4.1.1 The characteristics of aluminium alloys are to comply with the requirements of the **TL** Chapter 2, Materials. Series 5000 aluminium-magnesium alloys or series 6000 aluminium-magnesium-silicon alloys are to be used.

4.1.2 In the case of structures subjected to low service temperatures or intended for other specific applications, the type of alloys to be used is subject to **TL** approval.

4.1.3 Unless otherwise agreed, the Young's modulus for aluminium alloys is equal to 70000 N/mm^2 and the Poisson's ratio equal to 0.33.

4.2 Extruded plating

4.2.1 Extrusions with built-in plating and stiffeners, referred to as extruded plating, may be used.

4.2.2 In general, the application is limited to decks, bulkheads, superstructures and deckhouses. Other uses may be permitted by **TL** on a case by case basis.

4.2.3 Extruded plating is to be oriented so that the stiffeners are parallel to the direction of main stresses.

4.2.4 Connections between extruded plating and primary members are to be given special attention.

4.3 Mechanical properties of weld joints

4.3.1 Welding heat input lowers locally the mechanical strength of aluminium alloys hardened by work hardening (series 5000 other than condition O/H111) or by heat treatment (series 6000).

4.3.2 The as-welded properties of aluminium alloys of series 5000 are in general those of condition O/H111. Higher mechanical characteristics may be taken into account, provided they are duly justified.

4.3.3 The as-welded properties of aluminium alloys of series 6000 are to be agreed by **TL**.

4.4 Material factor k_{Al}

4.4.1 The material factor k_{Al} for aluminium alloys is to be obtained from the following formula:

$$k_{Al} = \frac{235}{R'_{lim}}$$

where

R'_{lim} = Minimum guaranteed yield stress of the parent metal in welded condition $R'_{p0.2}$, in [N/mm^2], but not to be taken greater than

70% of the minimum guaranteed tensile strength of the parent metal in welded condition R_m' , in [N/mm^2]

$R'_{p0.2}$ = $\eta_1 \cdot R_{p0.2}$

R_m' = $\eta_2 \cdot R_m$

$R_{p0.2}$ = Minimum guaranteed yield stress, in N/mm^2, of the parent metal in delivery condition

R_m = Minimum guaranteed tensile strength, in N/mm^2, of the parent metal in delivery condition

η_1, η_2 = Specified in Table 3.12.

4.4.2 In the case of welding of two different aluminium alloys, the material factor k_{Al} to be considered for the scantlings is the greater material factor of the aluminium alloys of the assembly.

Table 3.12 Aluminium alloys for welded construction

Aluminium alloys	η_1	η_2
Alloys without work-hardening treatment (series 5000 in annealed condition O or annealed flattened condition H111)	1	1
Alloys hardened by work hardening (series 5000 other than condition O/ H111)	$\frac{R'_{p0.2}}{R_{p0.2}}$	$\frac{R'_m}{R_m}$
Alloys hardened by heat treatment (series 6000)(1)	$\frac{R'_{p0.2}}{R_{p0.2}}$	0.6

Notes:

(1) *When no information is available, coefficient η_1 is to be taken equal to the metallurgical efficiency coefficient β defined in Table 3.13.*

$R'_{p0.2}$: Minimum guaranteed yield stress, in N/mm^2, of material in welded condition.

R'_m : Minimum guaranteed tensile strength, in N/mm^2, of material in welded condition

Table 3.13 Aluminium alloys - Metallurgical efficiency coefficient β

Aluminium alloy	Temper condition	Gross thickness [mm]	β
6005 A (Open sections)	T5 or T6	t ≤ 6	0.45
		t > 6	0.40
6005 A (Closed sections)	T5 or T6	All	0.50
6061 (Sections)	T6	All	0.53
6082 (Sections)	T6	All	0.45

5. Austenitic Steels

Where austenitic steels are applied having a ratio $R_{p0.2}/R_m \leq 0.5$, after special approval the 1 % proof stress $R_{p1,0}$ may be used for scantling purposes instead of the 0.2 % proof stress $R_{p0.2}$.

6. Other Materials and Products

6.1 Other materials and products such as parts made of iron castings, where allowed, products made of copper and copper alloys, rivets, anchors, chain cables, cranes, masts, derrick posts, derricks, accessories and wire ropes are to comply with the applicable requirements of **TL** Chapter 2, Materials.

6.2 The use of plastics or other special materials not covered by these Rules is to be considered by **TL** on a case by case basis. In such cases, the requirements for the acceptance of the materials concerned are to be agreed by **TL**.

6.3 Materials used in welding processes are to comply with the applicable requirements of the **TL** Rules for Materials.

6.4 As a rule, the use of grey iron, malleable iron or spherical graphite iron cast parts with combined ferritic/perlitic structure is allowed only for manufacturing low stress elements of secondary importance.

6.5 Ordinary iron cast parts may not be used for windows or side scuttles. The use of high grade iron cast parts of a suitable type will be considered by **TL** on a case by case basis.

B. Structural Details

1. General

This section contains definitions and principles for using the formulae in the following sections as well as indications concerning structural details.

1.1 Permissible stresses and required sectional properties

In the following sections, the permissible stresses are determined in addition to the formulae for calculating the section moduli and cross sectional areas of webs of frames, beams, girders, stiffeners etc. These formulae may be used when determining the scantlings of those elements by means of direct strength calculations.

In principle, the required section moduli and web areas are related to an axis which is parallel to the connected plating.

The required sectional properties of commonly available profiles connected vertically to plating are given in tables.

Where webs of stiffeners and girders are not fitted vertically to the plating (e.g. frames on the shell in the flaring fore body) the sectional properties (moment of inertia, section moduli and shear area) have to be determined for an axis which is parallel to the plating.

For bulb profiles and flat bars, the section modulus of the inclined profile can be calculated in a simplified manner by multiplying the corresponding value for the vertically arranged profile by sin α where α is the smaller angle between the web and attached plating.

Note:
In general, for bulb profiles and flat bars, α needs only be taken into account when α is less than 75°.

Furthermore, with asymmetric profiles where additional stresses occur according to 10, the required section modulus must be increased by the factor k_{sp} depending on the type of profile (see B.10).

1.2 Plate panels subjected to lateral pressure

The formula for plate panels subjected to lateral pressure as given in the following sections are based on the assumption of an un-curved plate panel having an aspect ratio b/a ≥ 2.24.

For curved plate panels and/or plate panels having aspect ratios smaller than b/a ≈ 2.24, the thickness may be reduced as follows:

$$t = C \cdot a \cdot \sqrt{p \cdot k} \cdot f_1 \cdot f_2 + t_K$$

C = Constant, e.g. C=1.1 for tank plating

$f_1 = 1 - \frac{a}{2r}$

$f_{1min} = 0.75$

$f_2 = \sqrt{1{,}1 - 0{,}5\,(a/b)^2}$

$f_{2max} = 1.0$

r = Radius of curvature,

a = Smaller breadth of plate panel,

b = Larger breadth of plate panel ,

p = Applicable design load.

t_K = Corrosion addition according to 9.

The above does not apply to the plate panels subjected to ice pressure as defined in Section 14 and to longitudinally framed side shell plating as defined in Section 7.

2. Upper and Lower Hull Flange

2.1 All continuous longitudinal structural members up to z_0 below the strength deck at side and up to z_u above base line are considered to be the upper and lower hull flange respectively.

2.2 Where the upper and/or the lower hull flange are made from ordinary hull structural steel their vertical extent $z_0 = z_u$ equals 0.1 **H**.

On ships with continuous longitudinal structural members above the strength deck, a fictitious depth **H** = $e_B + e'_D$ is to be applied. Here,

e_B = The distance between the neutral axis of the midship section and the base line in [m],

e'_D = See Section 6, C.4.1.

2.3 The vertical extent z of the upper and lower hull flange respectively made from higher tensile steel of one quality is not to be less than:

z = e (1 - n · k)

e = Distance of deck at side or of the base line from the neutral axis of the midship section. For ships with continuous longitudinal structural members above the strength deck, see Section 6, C.4.1.

n = $W_{(a)}/W$,

$W_{(a)}$ = Actual deck or bottom section modulus,

W = Rule deck or bottom section modulus.

If higher tensile steel of two different qualities are used, the stresses shall not exceed the permissible stresses determined according to Section 6, C.1.

3. Unsupported Span

3.1 Stiffeners, frames

The unsupported span ℓ is either the length of the stiffeners between two supporting girders or their length including end attachments (brackets).

The frame spacings and spans are to be measured in a vertical plane parallel to the centerline of the ship. However, if the ship's side deviates more than 10° from this plane, the frame distances and spans shall be measured along the side of the ship.

Instead of the true length of curved frames, the length of the chord between the supporting points can be selected.

3.2 Corrugated Bulkhead Elements

The unsupported span ℓ of the corrugated bulkhead elements is their length between the bottom and deck or their length between vertical or horizontal girders. Where corrugated bulkhead elements are connected to box type elements of comparatively low rigidity, their depth is to be included into the span ℓ unless calculations prove otherwise.

3.3 Transverse members and girders

The unsupported span ℓ of transverse members and girders is to be determined according to Figure 3.3, depending on the type of end attachment.

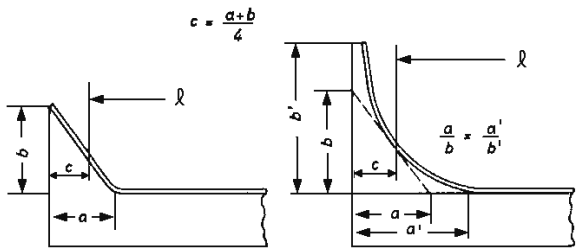

Figure 3.3 Unsupported span ℓ

In special cases, the rigidity of the adjoining girders is to be taken into account when determining the span of the girder.

4. End Attachments

4.1 Definitions

For determining scantlings of beams, stiffeners and girders the terms "constraint" and "simple support" will be used.

"Constraint" will be assumed where for instance the stiffeners are rigidly connected to other members by means of brackets or are running throughout over supporting girders.

"Simple support" will be assumed where for instance the stiffener ends are sniped or the stiffeners are connected to plating only, (see 4.3).

4.2 Brackets

4.2.1 For the scantlings of brackets, the required

modulus of the section is determining parameter. Where sections of different section moduli are connected to each other, the scantlings of the brackets are generally governed by the smaller section.

4.2.2 The thickness of brackets is not to be less than:

$$t = c \cdot \sqrt[3]{W / k_1} + t_K \text{ , [mm]}$$

c = 1.2 for non-flanged brackets

c = 0.95 for flanged bracket

k_1 = Material factor k for the section according to A.2.2

t_K = Corrosion allowance according to 9.

W = Section modulus of smaller section in [cm^3]

t_{min} = 5.0+ t_K [mm]

t_{max} = Web thickness of smaller section.

The thickness of brackets in tanks is not to be less than the minimum thickness t_{min} as per Section 12, B.2 Section 27 and Section 28, respectively.

4.2.3 The arm length of brackets is not to be less than:

$$\ell = 46{,}2 \sqrt[3]{\frac{W}{k_1}} \cdot \sqrt{k_2} \cdot c_t \quad [\text{mm}]$$

ℓ_{min} = 100 mm.

$$c_t = \sqrt{t / t_a}$$

t_a = "as built" thickness of bracket [mm]

$t_a \geq t$ (according to 4.2.2)

W = as defined in 4.2.2

k_2 = Material factor k for the bracket according to A.2.2

The arm length ℓ is the length of the welded connection.

Note :

For deviating arm length the thickness of brackets is to be estimated by direct calculations considering sufficient safety against buckling.

4.2.4 The throat thickness of the welded connection is to be determined according to Section 20 B.4.

4.2.5 Where flanged brackets are used, the width of the flange is to be determined according to the following formula:

b = 40 + W/30 [mm]

where, b is not to be taken less than 50 mm and need not be taken greater than 90 mm.

4.3 Sniped Ends of Stiffeners

Stiffeners may be sniped at the ends, if the thickness of the plating supported by stiffeners is not less than:

$$t = c \cdot \sqrt{p \cdot a\,(\ell - 0{,}5 \cdot a) / R_{eH}} \text{ , [mm]}$$

p = Design load in [kN/m^2]

ℓ = Unsupported length of stiffener in [m]

a = Spacing of stiffeners in [m]

R_{eH} = Minimum nominal upper yield stress of the plating material in [N/mm^2] according to Section. A.2.2

c = 15.8 for watertight bulkheads and for tank bulkheads when loaded by p_2 according to Section 5, D.8.

c = 19.6 otherwise.

4.4 Corrugated bulkhead elements

Care is to be taken that the forces acting at the supports of corrugated bulkheads are properly transmitted into the adjacent structure by fitting structural elements such as carlings, girders or floors in line with the corrugations.

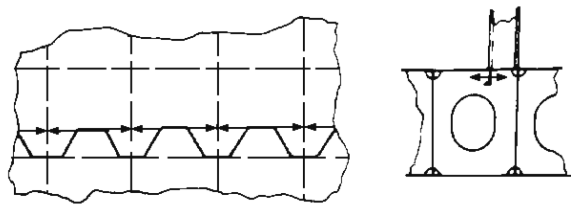

Figure 3.4 Corrugated bulkhead support

Guidance :

Where carlings or similar elements cannot be fitted in line with the web strips of corrugated bulkhead elements, these web strips cannot be included in the section modulus at the support point for transmitting the moment of constraint.

Deviating from the formula stipulated in Section 11, B.3.3 the section modulus of a corrugated element is then to be determined by the following formula:

$$W = t \cdot b \cdot (d + t) \quad [cm^3]$$

5. Effective Width of Plating

5.1 Frames and stiffeners

Generally, the spacing of frames and stiffeners may be taken as effective width of plating.

5.2 Girders

5.2.1 The effective width of plating e_m of the frames and girders may be determined according to Table 3.14 considering the type of loading.

Special calculations may be required for determining the effective width of one-sided or asymmetrical flanges.

5.2.2 The effective cross sectional area of plates is not to be less than the cross sectional area of the face plate.

5.2.3 The effective width of stiffeners and girders subjected to compressive stresses may be determined according to C, but is in no case to be taken greater than determined by 5.2.1.

5.3 Cantilevers

Where cantilevers are fitted at every frame, the effective width of plating may be taken as the frame spacing.

Where cantilevers are fitted at a greater spacing, the effective width of plating at the respective cross section may approximately be taken as the distance of the cross section from the point on which the load is acting, however, not greater than the spacing of the cantilevers.

Table 3.14 Effective width e_m of frames and girders

ℓ/e	0	1	2	3	4	5	6	7	≥8
e_{m1}/e	0	0.36	0.64	0.82	0.91	0.96	0.98	1.00	1.0
e_{m2}/e	0	0.20	0.37	0.52	0.65	0.75	0.84	0.89	0.9

e_{m1} is to be applied where girders are loaded by uniformly distributed loads or else by not less than 6 equally spaced single loads.

e_{m2} is to be applied where girders are loaded by 3 or less single loads.

Intermediate values may be obtained by direct interpolation.

ℓ = Length between zero-points of bending moment curve, i.e. unsupported span in case of simply supported girders and 0.6 X unsupported span in case of constraint of both ends of girder

e = Width of plating supported, measured from center to center of the adjacent unsupported fields.

6. Rigidity of Transverse Members and Girders

The moment of inertia of deck transverse members and girders, is not to be less than:

$$I = c \cdot W \cdot \ell \quad [cm^4]$$

c = 4.0 if both ends are simply supported

c = 2.0 if one end is constrained

c = 1.5 if both end are constrained

W = Section modulus of the structural member considered in [cm^3]

ℓ = Unsupported span of the structural member considered in [m].

7. Longitudinal and Transverse Members

7.1 Longitudinal Members

7.1.1 All longitudinal members taken into account for calculating the midship section modulus are to extend over the required length amidships and are to be tapered gradually to the required end thicknesses (see Section 6).

7.1.2 Abrupt discontinuities of strength of longitudinal members are to be avoided as far as practicable. Where longitudinal members having different scantlings are connected with each other, smooth transitions are to be provided.

Special attention in this respect is to be paid to the construction of continuous longitudinal hatch coamings forming part of the longitudinal hull structure.

7.1.3 At the ends of longitudinal bulkheads or continuous longitudinal walls suitable scarphing brackets are to be provided.

7.2 Transverse Members and Girders

7.2.1 Where transverse members and girders fitted in the same plane are connected to each other, major discontinuities of strength shall be avoided. The web depth of the smaller girder shall, in general, not be less than 60 % of the web depth of the greater one.

7.2.2 The taper between face plates with different dimensions is to be gradual. In general the taper shall not exceed 1: 3. At intersections the forces acting in the face plates are to be properly transmitted.

7.2.3 For transmitting the acting forces the face plates are to be supported at their knuckles. For supporting the face plates of cantilevers, (see Figure 3.5).

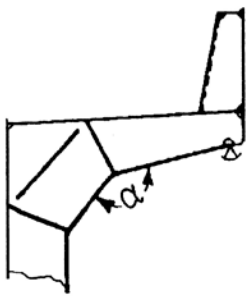

Figure 3.5 Support of face plates of cantilevers

7.2.4 Upon special approval the stiffeners at the knuckles may be omitted if the following condition is complied with:

$$\sigma_a \le \sigma_p \frac{b_e}{b_f} \quad [N/mm^2]$$

σ_a = Actual stress in the face plate at the knuckle in [N/mm^2]

σ_p = Permissible stress in the face plate in [N/mm^2]

b_f = Breadth of face plate in [mm]

b_e = Effective breadth of face plate:

$b_e = t_w + n_1 [t_f + c(b - t_f)]$ [mm]

t_w = Web thickness in [mm]

t_f = Face plate thickness in [mm]

$$b = \frac{1}{n_1}(b_f - t_w) \quad [mm]$$

$$c = \frac{1}{\left[(b - t_f)^2 / R \cdot t_f\right] - n_2} + \frac{n_3 \cdot t_f}{\alpha^2 \cdot R}$$

c_{max} = 1.0

2α = Knuckle angle in [º], (see Figure 3.6).

α_{max} = 45º

R = Radius of rounded face plates

R = t_f for knuckled face plates

n_1 = 1 for un-symmetrical face plates (face plate at one side only)

n_1 = 2 for symmetrical face plates

n_2 = 0 for face plates not supported by brackets

$n_2 = 0.9 \frac{(b - t_f)^2}{R \cdot t_f}$ ≤1.0 for face plates of multi-web girders

n_3 = 3 if no radial stiffener is fitted

n_3 = 1500 if one radial stiffener is fitted

n_3 = 3000 if two or more radial stiffeners are fitted or if one knuckle stiffener is fitted according to (a) in Figure 3.6

$$n_3 = \left(\frac{d}{t_f} - 8\right)^4$$

if one stiffener is fitted according to (b) in Figure 3.6

$3 \le n_3 \le 3000$

d = Distance of the stiffener from the knuckle [mm]

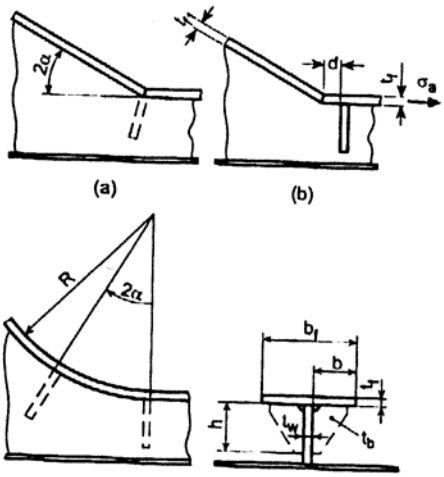

Figure 3.6 Typical stiffeners of rounded or knuckled face plates

For proof of fatigue strength of the weld seam in the knuckle, the stress concentration factor K_S (angle 2α< 35º according to Figure 3.6) related to the stress σ_a in the face plate of thickness t_f may be estimated as follows and may be evaluated with case 5 of Table 3.32

$$K_S = \frac{t_f}{t_{f1}}\left[1 + \frac{6 \cdot n_4}{1 + \left[\frac{t_f}{t_{f1}}\right]^2} \cdot \tan\left[\frac{t_{f1}}{R} \cdot 2\alpha\right]\right]$$

n_4 = 7.143 for $\frac{d}{t_f} > 8$

$$= \frac{d}{t_f} - 0.51 \cdot \sqrt[4]{\frac{d}{t_f}} \quad \text{for } 8 \ge \frac{d}{t_f} > 1.35$$

$$= 0.5 \cdot \frac{d}{t_f} + 0.125 \quad \text{for } 1.35 \ge \frac{d}{t_f} \ge -0.25$$

The welding seam has to be shaped according to Figure 3.7.

Scantlings of stiffeners (guidance):

thickness : $t_b = \frac{\sigma_a}{\sigma_p} \cdot t_f \cdot 2\sin\alpha$

height: $h = 1.5 \cdot b$

7.2.5 For preventing the face plates from tripping adequately spaced stiffeners or tripping brackets are to be provided. The spacing of these tripping elements shall not exceed 12 · b_f (b_f = Breadth of face plate).

7.2.6 The webs are to be stiffened to prevent buckling see also C.).

7.2.7 The location of lightening holes shall be such that the distance from hole edge to face plate is not less than 0.3 x web depth.

7.2.8 In way of high shear stresses lightening holes in the webs are to be avoided as far as possible.

7.3 Knuckles (General)

Flanged structural elements transmitting forces perpendicular to the knuckle, are to be adequately supported at their knuckle, i.e. the knuckles of the inner bottom are to be located above floors, longitudinal girders or bulkheads.

If longitudinal structures, such as longitudinal bulkheads or decks, include a knuckle which is formed by two butt-welded plates, the knuckle is to be supported in the vicinity of the joint rather than at the exact location of the joint. The minimum distance to the supporting structure is to be at least (see Figure 3.7),

$$25 + \frac{t_f}{2} \le 50 \quad [\text{mm}]$$

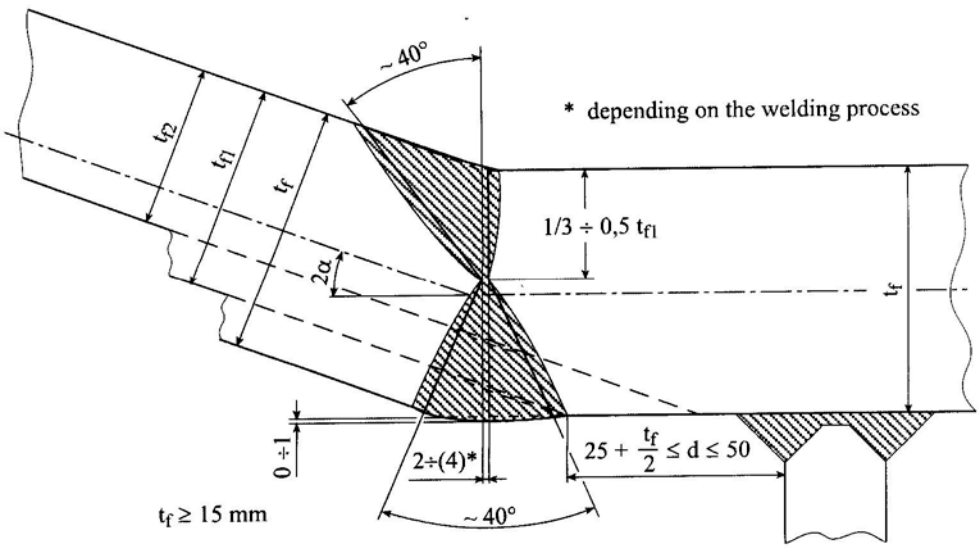

Figure 3.7 Welding and support of knuckles

On bulk carriers at knuckles between inner bottom and tank side slopes in way of floors the welding cut-outs must be closed by collar plates or insert plates, (see Figure 3.8).

In both cases a full penetration weld is required to inner bottom and bottom girder.

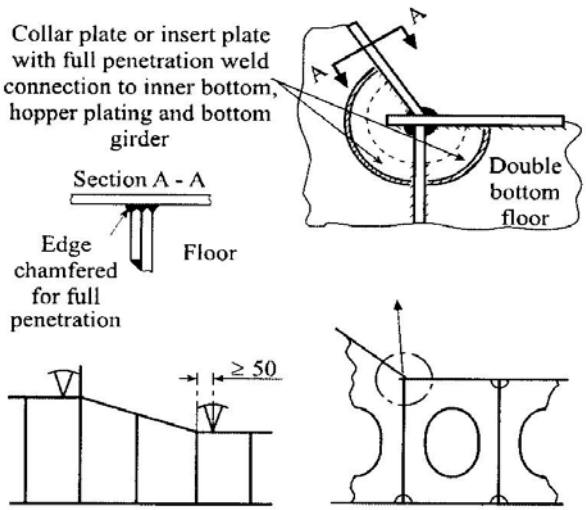

Figure 3.8 Knuckles of the double bottom

8. Evaluation of Notch Stresses

The notch stress σ_K evaluated for linear-elastic material behaviour at free plate edges, e.g. at hatch corners, openings in decks, walls, girders etc., should, in general, fulfill the following criterion:

$$\sigma_K \le f \cdot R_{eH}$$

f = 1.1 for ordinary hull structural steel

f = 0.9 for higher tensile steel with R_{eH} = 315 N/mm^2

f = 0.8 for higher tensile steel with R_{eH} = 355 N/mm^2

f = 0.73 for higher tensile steel with R_{eH} = 390 N/mm^2

If plate edges are free of notches and corners are rounded-off, a 20 % higher notch stress σ_K may be permitted.

A further increase of stresses may be permitted on the basis of a fatigue strength analysis as per D.

For some types of openings the notch factors are given in Figures. 3.8 and 3.9.

They apply to stress conditions with uniaxial or biaxial normal stresses.

In case of superimposed stresses due to longitudinal and shear loads, the maximum notch stress σ_{Kmax} of rectangular openings with rounded corners can approximately be calculated as follows:

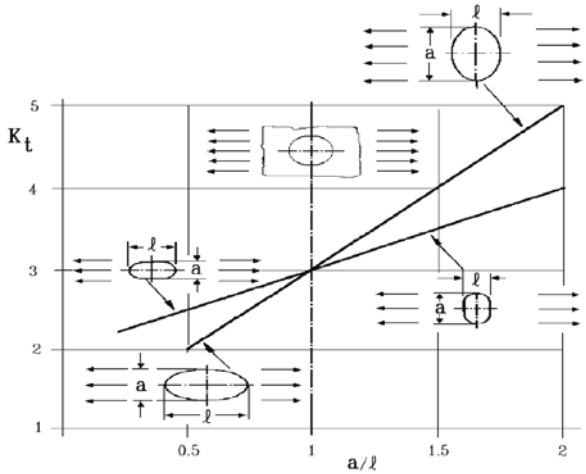

Figure 3.9 Notch factor K_t for rounded openings

$$\sigma_{Kmax} = +K_{tv} \cdot \sqrt{\sigma_1^2 + 3 \cdot \tau_1^2}$$

for σ_1 = Tensile stress

$$= -K_{tv} \cdot \sqrt{\sigma_1^2 + 3 \cdot \tau_1^2}$$

for σ_1 = compressive stress

K_{tv} = Notch factor for equivalent stress

$$= m \cdot \sqrt{\rho} + c$$

m,c = Parameters according to Figure 3.11.

ℓ, a = Length and height of opening

τ_1 = Shear stress related to gross area of section

σ_1 = Longitudinal stress (in direction of length ℓ of opening) related to gross area of section

r = Radius of rounded corner

ρ = Ratio of smaller length to radius of corner (ℓ/r or a/r).

ρ_{min} = 3

Note:

Because the notch factor and the equivalent stress are always positive, the sign of σ_1 governs the most unfavorable superposition of the stress components in any of the four corners. A load consisting of shear only, results in notch stresses of equal size with two positive and two negative values in the opposite corners.

An exact evaluation of notch stresses is possible by means of finite element calculations

For fatigue investigations the stress increase due to geometry of cut-outs has to be considered, (see Table 3.32).

Note :

These notch factors can only be used for girders with multiple openings if there is no correlation between the different openings regarding deformations and stresses.

9. Corrosion Allowances

9.1 The scantling requirements of the following sections imply the following general corrosion additions t_K:

t_K = 1.5 mm for t' ≤ 10 mm.

t_K = $\frac{0.1 \cdot t'}{\sqrt{k}}$ + 0.5 mm , max. 3.0 mm.

for t' > 10 mm.

t' = Required rule thickness excluding t_K in [mm].

k = Material factor according to A.2.2

9.2 For structural elements in specified areas t_K is not to be less than given in Table 3.15:

The requirements for corrosion protection are given in Section 22.

9.3 For structures in dry spaces such as box girders of container ships and for similar spaces the corrosion allowance is $t_K = \frac{0,1 \cdot t'}{\sqrt{k}}$ max. 2.5 mm. however, not less than 1.0 mm.

9.4 Corrosion additions for hatch covers and hatch coamings are to be determined according to Section 15.

9.5 Corrosion additions for container ships with a length L of 90 m and greater and operated in unrestricted service are to be determined according to Additional Rules for Longitudinal Strength Assessment of Container Ships.

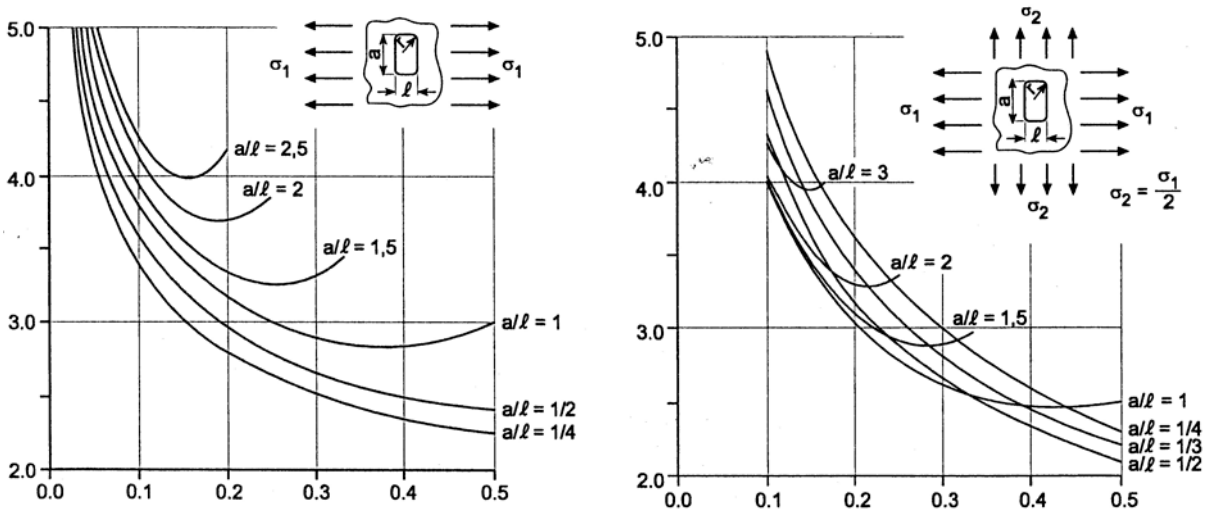

Figure 3.10 Notch factor K_t for rectangular openings with rounded corners at uniaxial state of stresses (left) and at multiaxial state of stress (right).

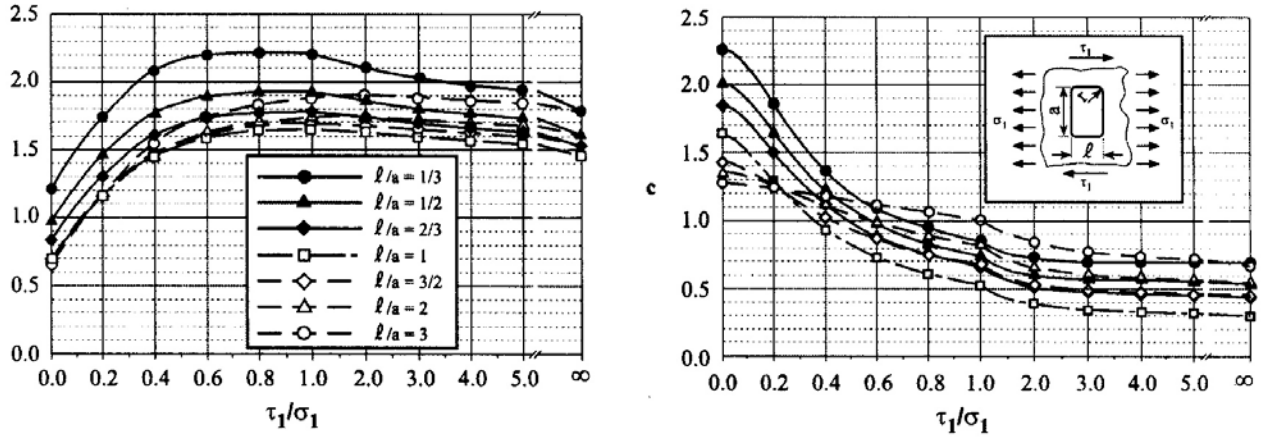

Figure 3.11 Parameters m and c to determine the notch factors of rectangular openings loaded by superimposed longitudinal and shear stresses

Table 3.15 Minimum corrosion additions

Area	$t_{K\,min}$ [mm]
In ballast tanks where the weather deck forms the tanktop,1.5 m. below tanktop.**(1)**	2.5
In cargo oil tanks where the weather deck forms the tanktop, 1.5 m. below tanktop. Horizontal members in cargo oil and fuel oil tanks.	2.0
Deck plating below elastically mounted deckhouses	3.0
(1) *t_K = 2.5 mm for all structures within topside tanks of bulk carriers. With longitudinal bulkheads exposed to grab operation and assigned to the notation "G" the corrosion addition t_K=2.5 mm.*	

10. Additional Stresses in Asymmetric Sections

10.1 Additional Stresses for Fatigue Strength Analysis

The additional stress σ_h occurring in non-symmetric sections may be calculated by the following formula:

$$\sigma_h = \frac{Q \cdot \ell_f \cdot t_f}{c \cdot W_y \cdot W_z}(b_1^2 - b_2^2) \quad [N/mm^2]$$

Q = Load on section parallel to its web within the unsupported span ℓ_f in [kN]

Q = p · **a** · ℓ_f [kN] in case of uniformly distributed load p [kN/m^2]

ℓ_f = Unsupported span of flange [m]

t_f, b_1, b_2 = Flange dimensions [mm] as shown in Figure 3.12

$b_1 \geq b_2$

W_y = Section modulus of section related to the y-y axis including the effective width of plating [cm^3]

W_z = Section modulus of the partial section consisting of flange and half of web area related to the z-z axis in [cm^3] (Bulb sections may be converted into a similar L-section)

c = Factor depending on kind of load, stiffness of the section's web and length and kind of support of the profile.

Table 3.16 Increase factor k_{sp}

Type of profile	k_{sp}
Flat bars and symmetric T-profiles	1.00
Bulb profiles	1.03
Asymmetric T-profiles $\left(\frac{b_2}{b_1} \approx 0{,}5\right)$	1.05
Rolled angels (L-profiles)	1.15

For profiles clamped at both ends and constant area load c = 80 can be taken for approximation. A precise calculation may be required, e.g. for longitudinal frames of tankers.

This additional stress σ_h is to be added directly to other stresses such as those resulting from local and hull girder bending.

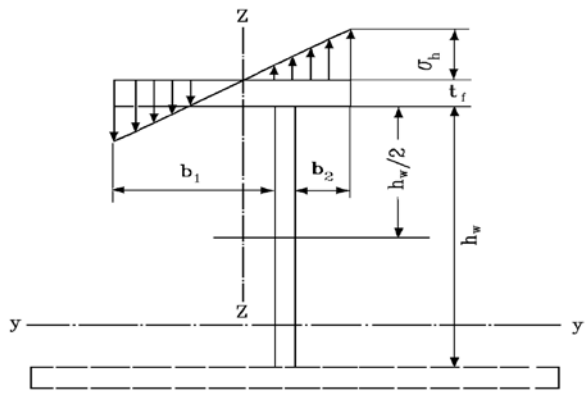

Figure 3.12 Asymmetrical profile

10.2 Correction of Section Modulus

The required section modulus W_y according to item 1.1 is to be multiplied with the factor k_{sp} according to Table 3.16.

C. Buckling Assessment

1. General

1.1 The requirements of this section apply to the buckling assessment of plate panels and longitudinals. These buckling strength requirements are related to plate panels and longitudinals subject to hull girder compression stresses and shear stresses based on design values of still water and wave bending moments and shear forces.

1.2 The hull buckling strength requirements are applicable to ships of 90 m or greater length, at 0.4L amidships. The assessment of hull buckling strength outside 0.4L amidships and of ships less than 90 m in length shall be considered as special cases.

1.3 The stiffened plate panels with circular or oval cut-outs will be considered special cases.

1.4 The hull buckling strength may be assessed by direct calculations, e.g. by F.E.M., in which case, **TL** shall be provided with documentation outlining the procedures, input data and results. Such calculations are to comply with the recommendations and requirements of Section 4.

2. Symbols and Definitions

2.1 Plates

s = Shorter side of plate panel in [m]

l = Longer side of plate panel in [m]

t_K = Standard deduction for corrosion in [mm], (see Table 3.17).

t_a = Thickness of plating, stiffener flange and web used in Table 3.17 calculating standard deduction t_K , in [mm]

t = t_a - t_K, net thickness, in [mm],of plating

m = Number of half waves, given in Table 3.18

K = Given in Table 3.18

Table 3.17 Standard deduction for corrosion

Structure	t_K [mm]	Limit values min-max [mm]
Compartments carrying dry bulk cargoes	0.05 t_a	0.5 – 1
One side exposure to water ballast and/or liquid cargo **(1)**		
One side exposure to water ballast and/or liquid cargo **(2)**	0.10 t_a	2-3
Two side exposure to water ballast and/or liquid cargo **(1)**		
Two side exposure to water ballast and/or liquid cargo **(2)**	0.15 t_a	2-4

(1) *Vertical surfaces and surfaces sloped at an angle greater than 25° to the horizontal line..*

(2) *Horizontal surfaces and surfaces sloped at an. angle less than 25° to the horizontal line*

2.2 Longitudinals

l = Span, in [m], of longitudinal

s = Spacing of profiles, in [m]

A = Cross- sectional area, in [cm^2], of longitudinal, including plate flange and calculated with thickness as specified in Table 3.17.

I_a = Moment of inertia, in [cm^4], of longitudinal, including plate flange and calculated with thickness as specified in Table 3.17.

I_P = Polar moment of inertia of the stiffener related to the point O, in [cm^4], (see Figure 3.13 and Table 3.19).

I_t = St. Venant's moment of inertia of the stiffener, in [cm^4], (see Figure 3.13 and Table 3.19).

Table 3.18 Number of half waves

m	K range $\left[K = \frac{*Cl^4}{\pi^4 EI_w}10^6\right]$
1	$0 \langle K \le 4$
2	$4 \langle K \le 36$
3	$36 \langle K \le 144$
4	$144 \langle K \le 400$
5	$400 \langle K \le 900$
.	.
.	.
m	$(m-1)^2 m^2 \langle K \le (m+1)^2 m^2$

$$*C = \frac{k_p E t^3}{3s\left(1+\frac{1.33 k_p h_w t^3}{1000 s t_w^3}\right)}10^{-3} \quad where,\ k_p = 1-\frac{\sigma_a}{\sigma_{Ep}}$$

- *C is spring stiffness exerted by supporting plate panel.*
- *k_p is not to be taken less than zero. For bulb plates , built up profiles and rolled angles,, kp need not to be taken less than 0.2.*
- *σ_{Ep} is elastic critical buckling stress (σ_E) of supporting plate derived from **Table 3.20.***
- *for h_w , t_w and I_w see **2.2**, for σ_a,, see **2.3**.*

I_w = Sectorial moment of inertia of the stiffener related to the point O, in [cm^6], (see Figure 3.13 and Table 3.19).

h_w = Web height, in [mm], (see Figure 3.13 and Table 3.19).

t_w = Web thickness, in [mm], considering standard deductions as specified in Table 3.17, (see Figure 3.13 and Table 3.19).

b_f = Flange width, in [mm], (see Figure 3.13 and Table 3.19).

t_f = Flange thickness, in [mm], considering standard deductions as specified in Table 3.17, (see Figure 3.13 and Table 3.19).

A_w = Web area $h_w \cdot t_w$

A_f = Flange area $b_f \cdot t_f$

2.3 Stress

σ_a = The calculated longitudinal compressive stress in [N/mm^2],

σ_c = The critical compressive buckling stress in [N/mm^2]

σ_E = The ideal elastic (Euler) compressive buckling stress in [N/mm^2]

σ_F = Yield stress of material in [N/mm^2]

τ_a = The calculated shear stress in [N/mm^2]

τ_c = The critical shear buckling stress in [N/mm^2]

τ_E = The ideal elastic (Euler) shear buckling stress in [N/mm^2]

τ_F = Yield stress in shear of material in [N/mm^2]

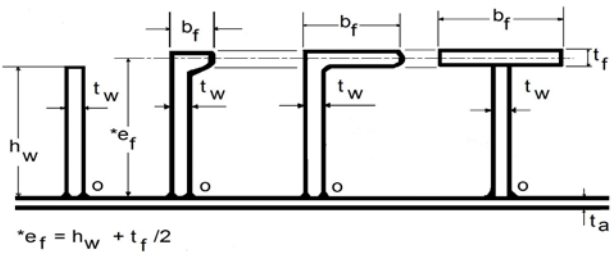

Figure 3.13 Main dimensions of typical longitudinal stiffeners

2.4 Material Properties

E = Young's modulus

E = $2.06 \cdot 10^5$ [N/mm^2] for steel

E = $0.69 \cdot 10^5$ [N/mm^2] for aluminium alloys

3. Critical Buckling Stress

3.1 Plates

3.1.1 The critical buckling stress in compression σ_c is determined as given Table 3.20.

3.1.2 The critical buckling stress in shear τ_c is determined as given Table 3.21.

Table 3.19 Moments of inertia

Profile	Flat Bar	Profiles with Bulb or Flange
I_P	$\frac{h_w^3.t_w}{3.10^4}$	$\frac{A_w.h_w^2}{3.10^4}+\frac{A_f e_f^2}{10^4}$
	$\frac{h_w.t_w^3}{3.10^4}\left[1-0{,}63\frac{t_w}{h_w}\right]$	$\frac{A_w.t_w^2}{3.10^4}\left[1-0{,}63\frac{t_w}{h_w}\right]+$ $\frac{A_f.t_f^2}{3.10^4}\left[1-0{,}63\frac{t_f}{b_f}\right]$
I_W	$\frac{A_w^3}{36.10^6}$	for bulb and angle profiles: $\frac{A_f.e_f^2.b_f^2}{12.10^6}\left[\frac{A_f+2.6A_w}{A_f+A_w}\right]$
		for T- profiles $\frac{b_f^3.t_f.e_f^2}{12.10^6}$

3.2 Longitudinals

The critical buckling stress in compression σ_c, and the critical buckling stress in shear τ_c are determined as given Table 3.20 and Table 3.21,respectively.

4. Scantling Criteria

4.1 The critical buckling stress in compression σ_c of plates panels and longitudinals, as derived Table 3.20 is to satisfy the following:

$$\sigma_c \geq \beta\sigma_a$$

where,

β = 1 for plating and for web plating of longitudinals

β = 1.1 for longitudinals

σ_a = Calculated bending stress, (see Table 3.24).

4.2 The critical buckling stress in shear τ_c of plates panels, as derived Table 3.21 is to satisfy the following:

$$\tau_c \geq \tau_a$$

where,

τ_a = Calculated shear stress, (see Table 3.25).

Table 3.20 The critical compressive buckling stress

σ_c [N/mm^2]	Cases
σ_E **(1)**	$\sigma_E \le \frac{\sigma_F}{2}$
$\sigma_F\left[1-\frac{\sigma_F}{4\sigma_E}\right]$ **(2)**	$\sigma_E \rangle \frac{\sigma_F}{2}$

(1) *σ_E is calculated according to Table 3.22(for plates)*
σ_E is calculated according to Table 3.23(for longitudinals)

(2) *σ_F may be taken as 235 N/mm^2 for mild steel. It shall not be taken less than the limit to the yield point of materials.*

Table 3.21 The critical shear buckling stress

τ_c [N/mm^2]	Cases
τ_E **(1)**	$\tau_E \le \frac{\sigma_F}{2\sqrt{3}}$
$\tau_F\left[1-\frac{\tau_F}{4\tau_E}\right]$ **(2)**	$\tau_E \rangle \frac{\sigma_F}{2\sqrt{3}}$

(1) $\tau_E = \frac{0.9E}{10^6} t^2\left[\frac{5.34}{s^2}+\frac{4}{l^2}\right]$ *for plates.*

(2) $\tau_F = \frac{\sigma_F}{\sqrt{3}}$ *for σ_F see **Table 3.20**.*

Table 3.22 The Euler compressive buckling stress for plating, in [N/mm^2]

For plating with longitudinal stiffeners
(parallel to compressive stress)

$$\sigma_E = \frac{3{,}6E}{10^6}\left[\frac{t}{s}\right]^2$$

For plating with transverse stiffeners
(perpendicular to compressive stress)

$$\sigma_E = \frac{0.9}{10^6} cE\left[1+\left(\frac{s}{l}\right)^2\right]^2\left[\frac{t}{s}\right]^2$$

where,

c =1.30 when the plating is supported by floors or deep girders

c = 1.21 when stiffeners are angles or T-sections

c = 1.10 when stiffeners are bulb bars

c = 1.05 when stiffeners are flat bars

Table 3.23 The Euler compressive buckling stress for longitudinals, in [N/mm^2]

For the column buckling mode(perpendicular to plane of plating) **without rotation of the cross section,** see Notes 1and 3.

$$\sigma_E = 0.001E\frac{I_a}{Al^2}$$

For torsional buckling, see Note 3.

$$\sigma_E = \frac{\pi^2}{10^4 I_p l^2} EI_\omega\left[m^2+\frac{K}{m^2}\right]+0.385E\left[\frac{I_t}{I_p}\right]$$

For web and flange buckling, see Note 2 and 3.

$$\sigma_E = 3.8E\left(\frac{t_w}{h_w}\right)^2$$

Note:

1) *A plate flange equal to the frame spacing may be included.*

2) *For flanges on angles and t-sections of longitudinals, buckling is taken care of by the following requirement:*

$\frac{b_f}{t_f} \le 15$; where, *b_f = flange width for angles*
b_f = half the width for T-section

3) *All symbols as defined in **C2**.*

Table 3.24a Calculated bending stress, in [N/mm^2]

$$\sigma_a = \frac{M_s + M_w}{I_n} e10^5$$

$$\sigma_a = \min\frac{30}{k}$$

Table 3.24b Variables used for calculating bending stress σ_a

M_s = Still water bending moment [kN.m] as in Section 6 **(1).**

M_w = wave bending moment [kN.m] as in Section 6 **(1).**

I_n = moment of inertia, in [cm^4], of the hull girder

e = vertical distance, in [m], from neutral axis to considered point

k = 1.0 for ordinary hull structural steel

k < 1.0 for higher tensile steel according to Table 3.1 in 2.2

(1) *M_s and M_w are to be taken as sagging or hogging bending moments, respectively, for members above or below the neutral axis. Where the ship is always in hogging condition in still water, the sagging bending moment (M_s +M_w) is to be specially considered.*

Table 3.25 Calculated shear stress, in [N/mm^2]

Ships without effective longitudinal bulkheads for side shell $\tau_a = \frac{50\lvert Q_s + Q_w \rvert}{t} \cdot \frac{S}{I}$ N/mm^2
Ships with two effective longitudinal Bulkheads for side shell $\tau_a = \frac{100\lvert (0.5-\varphi)(Q_s + Q_w) + \Delta Q_{sh} \rvert}{t} \cdot \frac{S}{I}$ N/mm^2 for longitudinal bulkheads $\tau_a = \frac{100\lvert \varphi(Q_s + Q_w) + \Delta Q_{bl} \rvert}{t} \cdot \frac{S}{I}$ N/mm^2
where, Q_s = Still water shear forces Q_w = The wave shear forces, ΔQ_{sh} = Shear force acting upon the side shell plating ΔQ_{bl} = Shear force acting upon the longitudinal bulkhead plating t = The thickness of side shell S = First moment in cm^3, about the neutral axis, of the area of the effective longitudinal members between the vertical level at which the shear stress is being determined and the vertical extremity of effective longitudinal members, taken at the section under consideration φ = Ratio of shear force shared by the longitudinal bulkhead to the total shear force, (see Section 6). I = Moment of inertia in cm^4 about the horizontal neutral axis at the section under consideration

D. Fatigue Assessment

1. General

1.1 This section provides requirements, rules and recommendations pertaining to the assessment of the fatigue strength of structural details which are predominantly subjected to cyclic loads

1.2 The aim of fatigue design is to ensure that the structure has an adequate fatigue life. The calculated fatigue life also forms the basis for an efficient inspection program during fabrication and during the operational life of the structure.

1.3 The fatigue strength assessment is to be carried out either on the basis of a permissible peak stress range for standard stress spectra (see 5.2.1) or on the basis of a cumulative damage ratio (see 5.2.2).

1.4 The notched details i.e. the welded joints as well as notches at free plate edges are to be considered individually.

1.5 The rules are applicable to structures made of ordinary and higher-tensile hull structural steels according to Section A.2 as well as aluminium alloys Section A.4. Other materials such as cast steel can be treated in an analogous manner by using appropriate design "S-N" curves.

2. Definitions

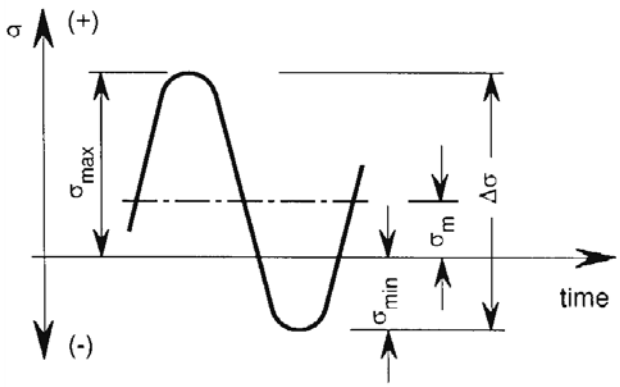

Figure 3.14 Dynamic load cycle

$\Delta\sigma$ = Applied stress range (σ_{max}- σ_{min}) in [N/mm^2], (see Figure 3.14).

σ_{max} = Maximum upper stress of a stress cycle in [N/mm^2]

σ_{min} = Maximum lower stress of a stress cycle in [N/mm^2]

σ_m = Mean stress (σ_{max}/2 + σ_{min} /2) in [N/mm^2]

$\Delta\sigma_{max}$ = Applied peak stress range within a stress range spectrum in [N/mm^2]

$\Delta\sigma_p$ = Permissible stress range in [N/mm^2]

$\Delta\tau$ = Corresponding range for shear stress in [N/mm^2]

n = Number of applied stress cycles

N = Number of endured stress cycles according to "S-N" curve (= endured stress cycles under constant amplitude loading)

$\Delta\sigma_R$ = Fatigue strength reference value of "S-N" curve at $2 \cdot 10^6$ cycles of stress range in [N/mm^2] (= detail category number according to Table 3.32)

cf_m = Correction factor for material effect

cf_R = Correction factor for mean stress effect

cf_w = Correction factor for weld shape effect

cf_i = Correction factor for importance of structural element

cf_s = Additional correction factor for structural stress analysis

f_n = Factor considering stress spectrum and number of cycles for calculation of permissible stress range

$\Delta\sigma_{Rc}$ = Corrected fatigue strength reference value of "S-N" curve at $2 \cdot 10^6$ stress cycles in [N/mm^2]

D = Cumulative damage ratio.

3. Scope

3.1 The requirements of this section apply to fatigue cycles induced by wave loads. Fatigue induced by vibrations, low cycle loads, transient loads such as thermal loads, or impact loads such as slamming, bow flare impacts and sloshing in partly filled tanks, is out of the scope of this section.

3.2 Low cycle fatigue problems in connection with extensive cyclic yielding have to be specially considered. When applying the following rules, the calculated nominal stress range should not exceed 1.5 times the minimum nominal upper yield point. In special cases the fatigue strength analysis may be performed by considering the local elasto-plastic stresses.

3.3 No fatigue strength analysis is required if the peak stress range due to dynamic loads in the seaway (stress spectrum A according to 3.4) and/or due to changing draught or loading conditions, respectively, fulfils the following conditions:

- Peak stress range only due to seaway-induced dynamic loads:

  $$\Delta\sigma_{max} \leq 2.5\ \Delta\sigma_R$$

- Sum of the peak stress ranges due to seaway induced dynamic loads and due to changes of draught or loading condition, respectively:

  $$\Delta\sigma_{max} \leq 4.0\ \Delta\sigma_R.$$

For welded structures of detail category 80 or higher a fatigue strength analysis is required only in case of extraordinary high dynamic stresses.

3.4 The stress ranges $\Delta\sigma$ which are to be expected during the service life of the ship or structural component, respectively, may be described by a stress range spectrum (long-term distribution of stress range). Figure 3.15 shows three standard stress range spectra A, B and C, which differ from each other in regard to the distribution of stress range $\Delta\sigma$ as a function of the number of load cycles.

In case of only seaway-induced stresses, for a design life time of about 20 years normally the stress range spectrum A is to be assumed with a number of cycles $n_{max} = 5 \cdot 10^7$. For design life time of 30 years the number of cycles $n_{max} = 7.5 \cdot 10^7$ is to be assumed.

The maximum and minimum stresses result from the maximum and minimum relevant seaway-induced load effects. The different load-effects for the calculation of $\Delta\sigma_{max}$ are, in general, to be superimposed conservatively. Table 3.26 shows examples for the individual loads which have to be considered in normal cases.

Under extreme seaway conditions stress ranges exceeding $\Delta\sigma_{max}$ occur (see Section 6, D.1). These stress ranges, which $n<10^4$ can be neglected

regarding the fatigue life, when the stress ranges $\Delta\sigma_{max}$ derived from loads according to Table 3.26 are assigned to the spectrum A.

For ships of unconventional hull shape and for ships for which a special mission profile applies, a stress range spectrum deviating from spectrum A may be applied which may be evaluated by the spectral method.

Other significant fluctuating stresses, e.g. in longitudinals due to deflections of supporting transverse members in longitudinal and transverse structures of ships with large deck openings (see Section 6) as well as additional stresses due to the application of asymmetrical sections, have to be considered (see B.10).

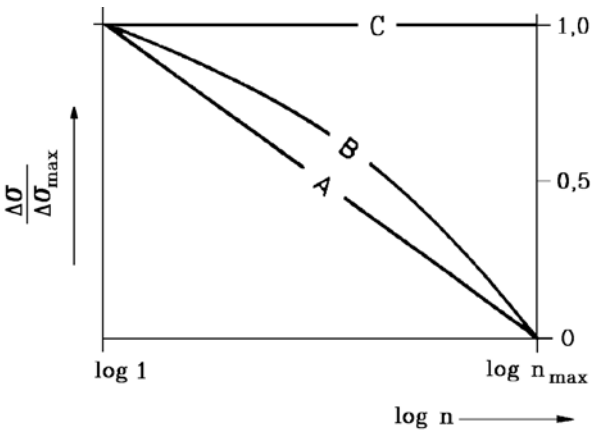

A : Straight-line spectrum (typical stress range spectrum of seaway-induced stress ranges)

B : Parabolic spectrum (approximated normal distribution of stress range $\Delta\sigma$)

C : Rectangular spectrum (constant stress range within the whole spectrum; typical spectrum of engine-or propeller-excited stress ranges).

Figure 3.15 Standard stress range spectra A, B and C

3.5 Additional stress cycles resulting from changing mean stresses, e.g. due to, changing loading conditions or draught, need generally not be considered as long as the seaway-induced stress ranges are determined for the loading condition being most critical with respect to fatigue strength and the maximum change in mean stress is less than the maximum seaway-induced stress range.

Larger changes in mean stress are to be included in the stress range spectrum by superposing the largest stress ranges conservatively (e.g. in accordance with the "rainflow counting method"). If nothing else is specified, 10^3 load cycles have to be assumed for changes in loading condition or draught.

3.6 The fatigue strength analysis is, depending on the detail considered, based on one of the following types of stress:

- For notches of free plate edges the notch stress σ_k, determined for linear-elastic material behavior, is relevant, which can normally be calculated from a nominal stress σ_n and a theoretical stress concentration factor K_t.

  Values for K_t are given in Figure 3.9 and Figure 3.10 for different types of cut-outs. The fatigue strength is determined by the detail category (or $\Delta\sigma_R$) according to Table 3.32, type E2 and E3.

- For welded joints the fatigue strength analysis is normally based on the nominal stress σ_n at the structural detail considered and on an appropriate detail classification as given in Table 3.32, which defines the detail category (or $\Delta\sigma_R$).

- For those welded joints, for which the detail classification is not possible or additional stresses occur, which are not or not adequately considered by the detail classification, the fatigue strength analysis may be performed on the basis of the structural stress σ_s in accordance with subsection 7.

4. Quality Assurance

Weld quality assurance is based on adequate organization of work flow in fabrication, destructive and non-destructive inspection of materials and welds, and the individual acceptance levels for the different types of weld imperfections.

4.1 The detail classification of the different welded joints as given in Table 3.32 is based on the assumption that the fabrication of the structural detail or welded joint, respectively, corresponds in regard to external defects, at least to quality group B according to ISO 5817 and in regard to internal defects, at least to quality group C. Further information about the tolerances can also be found in the relevant Standards;

e.g. ISO 10042 may be used for aluminium.

4.2 Relevant information has to be included in the manufacturing document for fabrication. If it is not possible to comply with the tolerances given in the standards, this has to be accounted for when designing the structural details or welded joints, respectively. In special cases an improved manufacture as stated in 4.1 may be required, e.g. stricter tolerances or improved weld shapes, (see 6.2.4).

4.3 The following stress increase factors k_m for considering significant influence of axial and angular misalignment are already included in the fatigue strength reference values $\Delta\sigma_R$ (Table 3.32):

k_m = 1.15 butt welds (corresponding type A1, A2, A11)

= 1.30 butt welds (corresponding type A3 ÷ A10)

= 1.45 cruciform joints (corresponding type D1 ÷ D5)

= 1.25 fillet welds on one plate surface (corresponding type C7, C8)

Other additional stresses have to be considered separately.

5. Fatigue Strength Analysis for Free Plate Edges and for Welded Joints Using Detail Classification

5.1 General

5.1.1 Corresponding to their notch effect, welded joints are normally classified into detail categories considering particulars in geometry and fabrication, including subsequent quality control, and definition of nominal stress. Table 3.32 shows the detail classification based on recommendations of the International Institute of Welding (**IIW**) giving the detail category number (or $\Delta\sigma_R$).

In Table 3.33 $\Delta\sigma_R$ - values for steel are given for some intersections of longitudinal frames of different shape and webs, which can be used for the assessment of the longitudinal stresses.

It has to be noted that some influence parameters cannot be considered by the detail classification and that a large scatter of fatigue strength has therefore to be reckoned with.

5.1.2 Details which are not contained in Table 3.32 may be classified either on the basis of local stresses in accordance with C. or, else, by reference to published experimental work or by carrying out special fatigue tests, assuming a sufficiently high confidence level (see 6.1) and taking into account the correction factors as given in 7.2.2.

5.1.3 Regarding the definition of nominal stress, the arrows in Table 3.32 indicate the location and direction of the stress for which the stress range is to be calculated. The potential crack location is also shown in Table 3.32. Depending on this crack location, the nominal stress range has to be determined by using either the cross sectional area of the parent metal or the weld throat thickness, respectively. Bending stresses in plate and shell structures have to be incorporated into the nominal stress, taking the nominal bending stress acting at the location of crack initiation.

The factor K_s for the stress increase at transverse butt welds between plates of different thickness (see type A5 in Table 3.32) can be estimated in a first approximation as follows:

$$K_S = \frac{\text{larger plate thickness}}{\text{smaller plate thickness}}$$

Additional stress concentrations which are not characteristic of the detail category itself, e.g. due to cut-outs in the neighborhood of the detail, have also to be incorporated into the nominal stress.

5.1.4 In the case of combined normal and shear stress the relevant stress range is to be taken as the range of the principal stress at the potential crack location which acts approximately perpendicular (within ±45°) to the crack front as shown in Table 3.32 as long as it is larger than the individual stress components.

5.1.5 Where solely shear stresses are acting the largest principal stress $\sigma_1 = \tau$ may be used in combination with the relevant detail category.

Table 3.26 Maximum and minimum loads for seaway induced cyclic loads

Load	Maximum load	Minimum load
Vertical longitudinal bending moments (Section 6) **(1)**	$M_{SW} + M_{ST} + f_P \cdot M_{WVhog}$	$M_{SW} + M_{ST} + f_P \cdot M_{WVsag}$
Vertical longitudinal bending moments and horizontal wave bending moments **(1)** (Section 6)	$M_{SW} + M_{ST} + f_P \cdot (0.6\, M_{WVhog} + M_{WH})$	$M_{SW} + M_{ST} + f_P \cdot (0.6\, M_{WVsag} - M_{WH})$
Vertical longitudinal bending moments, horizontal wave bending moments and torsional moments (Section 6.) **(1)**	$f_F \cdot \{M_{SW} + M_{ST} + f_P\, [(0.43+C) \cdot M_{WVhog} + M_{WH} + M_{WT}]\}$	$f_F \cdot \{M_{SW} + M_{ST} + f_P\, [(0.43+C(0.5-C)) \cdot M_{WVhog} + C(0.43+C) \cdot M_{WVsag} - M_{WH} - M_{WT}]\}$
	$C = \left(\frac{x}{L} - 0.5\right)^2$	
Loads on weather decks **(2)** (Section 5, D.4)	P_{WD}	0
Load on ship's sides **(2) (4)**		
- Below **T**	$P_S + P_{WS}$	$P_S - P_{WS}$ but ≥ 0
- Above **T** (Section 5, C.2 and D.2.)	P_{WS}	0
Load on ship's bottom **(2) (4)** (Section 5, C.2 and D.3)	$P_S + P_{WB}$	$P_S + P_{WB}$
Liquid pressure in completely filled tanks (Section 5, C.3 and D.8.1) **(4)**	$P_{ST} + P_{DT}$	$P_{ST} + P_{DT}$ but $\geq 100\, p_v$
Loads due to cargo (Section 5, C.4 and D.6)	$P_{SC} + P_{DC}$	$P_{SC} + P_{DC}$
Loads due to friction forces **(3)** (Section 17, C.5.2.8)	P_h	$- P_h$
Loads due to rudder forces **(3)** (Section 14, B)	C_R Q_R	$-C_R$ $-Q_R$

(1) *Maximum and minimum load are to be so determined that the largest applied stress range $\Delta\sigma$ as per Figure 3.14 at conservative mean stress is obtained having due regard to the sign (plus, minus).*

(2) *f_P = Coefficient corresponding to the probability level, taken equal to:*

= 1.0 for strength assessments corresponding to the probability level of 10^{-8}

= 0.5 for strength assessments corresponding to the probability level of 10^{-4}

= 1.0 for stiffeners if no other cyclic load components are considered

f_F = Weighting factor for the simultaneousness of global and local loads.

(3) *In general the largest load is to be taken in connection with the load spectrum B without considering further cyclic loads.*

(4) *Assumption of conservative super positioning for the shell structure: Where appropriate, proof is to be furnished for T_{min}.*

5.2 Permissible Stress Range for Standard Stress Range Spectra or Calculation of the Cumulative Damage Ratio

5.2.1 For standard stress range spectra according to Figure 3.14, the permissible peak stress range can be calculated as follows:

$$\Delta\sigma_p = f_n \cdot \Delta\sigma_{Rc}$$

$\Delta\sigma_{Rc}$ = Detail category or fatigue strength reference value, respectively, corrected according to 6.2

n = Factor as given in Table 3.27.

The peak stress range of the spectrum must not exceed the permissible value, i.e.

$$\Delta\sigma_{max} \leq \Delta\sigma_p$$

5.2.2 If the fatigue strength analysis is based on the calculation of the cumulative damage ratio, the stress range spectrum expected during the envisaged service life is to be established (see 3.4) and the cumulative damage ratio D is to be calculated as follows:

$$D = \sum_{i=1}^{I} \left(n_i / N_i\right)$$

I = Total number of blocks of the stress range spectrum for summation (normally $I \geq 20$)

n_i = Number of stress cycles in block i

N_i = Number of endured stress cycles determined from the corrected design "S-N" curve (see 6). taking $\Delta\sigma = \Delta\sigma_i$

$\Delta\sigma_i$ = Stress range of block i

To achieve an acceptable high fatigue life, the cumulative damage sum should not exceed D = 1.

If the expected stress range spectrum can be superimposed by two or more standard stress spectra according to 3.4, the partial damage ratios D_i due to the individual stress range spectra can be derived from Table 3.27. In this case a linear relationship between number of load cycles and cumulative damage ratio may be assumed. The numbers of load cycles given in Table 3.27 apply for a cumulative damage ratio of D=1.

6. Design "S-N" Curves

6.1 General

6.1.1 The capacity of welded steel joints with respect to the fatigue strength is characterized by S-N curves which give the relationship between the stress range applied to a given detail and the number of constant amplitude load cycles to failure. These S-N curves are applicable to steels with minimum yield strength less than 400 N/mm^2. For steels with higher yield strength, data obtained from an approved test program is to be used.

The design S-N curves for the calculation of the cumulative damage ratio according to 5.2.2 are shown in Figure 3.16 for welded joints at steel and in Figure 3.17 for notches at plate edges of steel plates. For aluminium alloys (Al) corresponding S-N curves apply with reduced detail categories $\Delta\sigma_R$ acc. to Table 3.32. The S-N curves represent the lower limit of the scatter band of 95% of all test result available (corresponding to 97.5% survival probability) considering further detrimental effects in large structures.

To account for different influence factors, the design "S-N" curves have to be corrected according to 6.2.

6.1.2 The "S-N" curves represent section wise linear relationships between log ($\Delta\sigma$) and log (N):

$$\log(N) = 7.0 + m \cdot Q$$

Q = $\log(\Delta\sigma_R / \Delta\sigma) - 0.69897/m_0$

m = Slope exponent of "S-N" curve, (see 6.1.3 and 6.1.4).

m_0 = Inverse slope in the range $N \leq 1 \cdot 10^7$

m_0 = 3 for welded joints

m_0 = 3.5 ÷5 for free plate edges (see Figure 3.17).

Table 3.27 Factor f_n for the determination of the permissible stress range for standard stress range spectra

Stress range spectrum	Welded joints (m_0 = 3) n_{max}=				Plates edges Type E1 (m_0 = 5) n_{max} =				Type E2 (m_0 = 4) n_{max} =				Type E3 (m_0 = 3.5) n_{max} =			
	10^3	10^5	$5 \cdot 10^7$	10^8	10^3	10^5	$5 \cdot 10^7$	10^8	10^3	10^5	$5 \cdot 10^7$	10^8	10^3	10^5	$5 \cdot 10^7$	10^8
A		(17.2)	3.53	3.02		(8.1)	3.63	3.32		(9.2)	3.68	3.28		(10.3) (12.2) **(2)**	3.65	3.19
B		(9.2)	1.67	1.43	(9.5)	5.0	1.95	1.78	(11.2)	5.9	1.86	1.65		6.6 7.5 **(2)**	1.78	1.55
C	(12.6)	2.71	0.424 0.543 **(1)**	0.369 0.526 **(1)**	4.57	1.82	0.606 0.673 **(1)**	0.561 0.653 **(1)**	(5.2)	2.11	0.532 0.621 **(1)**	0.482 0.602 **(1)**	(8.8)	2.35	0.483 0.587 **(1)**	0.430 0.569 **(1)**

For definition of type E1 to type E3 see Table 3.32

For definition of mo see 6.1.2

The values given in parentheses may be applied for interpolation.

For interpolation between any pair of values (n_{max1} ; f_{n1}) and (n_{max2} ; f_{n2}), the following formula may be applied in the case of stress spectrum A or B:

$$\log f_n = \log f_{n1} + \log\left(n_{max}/n_{max1}\right)\frac{\log\left(f_{n2}/f_{n1}\right)}{\log\left(n_{max2}/n_{max1}\right)}$$

For the stress spectrum C intermediate values may be calculated according to 6.1.2 by taking $N = n_{max}$ and $f_n = \Delta\sigma / \Delta\sigma_R$.

(1) *f_n for non-corrosive environment, see also 6.1.4.*

(2) *for $\Delta\sigma_R$= 100 [N/mm^2]*

The S-N curve for detail category 160 forms the upper limit also for S-N curves of free edges of steel plates with detail categories 100-140 in the range of low stress cycles, (see Figure 3.17).

The same applies accordingly to detail categories 71 or 80 of aluminum alloys, (see type E1 in Table 3.32).

6.1.3 For structures subjected to variable stress ranges, the “S-N” curves shown by the solid lines in Figure 3.16 and Figure 3.17 have to be applied ("S-N" curves of type "M"), i.e.

$m = m_0$ for $N \le 10^7$ $(Q \le 0)$

$m = 2 \cdot m_0 - 1$ for $N > 10^7$ $(Q > 0)$.

6.1.4 For stress ranges of constant magnitude (stress range spectrum C) in non-corrosive environment from $N = 1 \cdot 10^7$ the "S-N" curves of type "O" in Figure 3.16 and 3.16 can be used, thus:

$m = m_0$ for $N \le 10^7$ $(Q \le 0)$

$m = 22$ for $N > 10^7$ $(Q > 0)$.

6.2 Correction of the reference value of the design "S-N" curve

6.2.1 A correction of the reference value of the "S-N" curve (or detail category) is required to account for additional influence factors on fatigue strength as follows:

$$\Delta\sigma_{Rc} = cf_m \cdot cf_R \cdot cf_w \cdot cf_i \cdot \Delta\sigma_R$$

cf_m, cf_R, cf_w, cf_i defined in 6.2.2 - 6.2.5.

For the description of the corrected design "S-N" curve, the formulae given in 6.1.2 may be used by replacing $\Delta\sigma_R$ by $\Delta\sigma_{Rc}$.

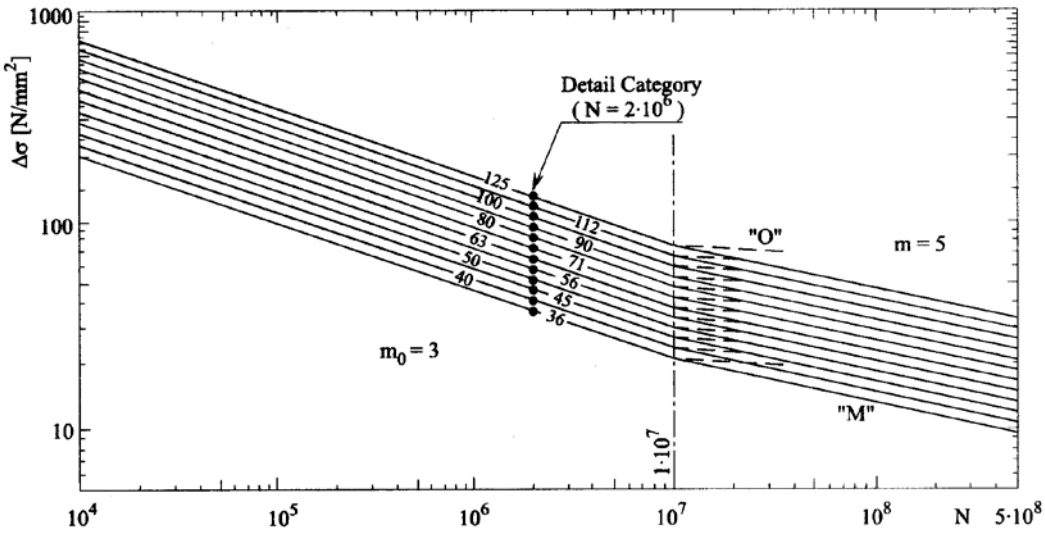

Figure 3.16 "S-N" curves for welded joints at steel

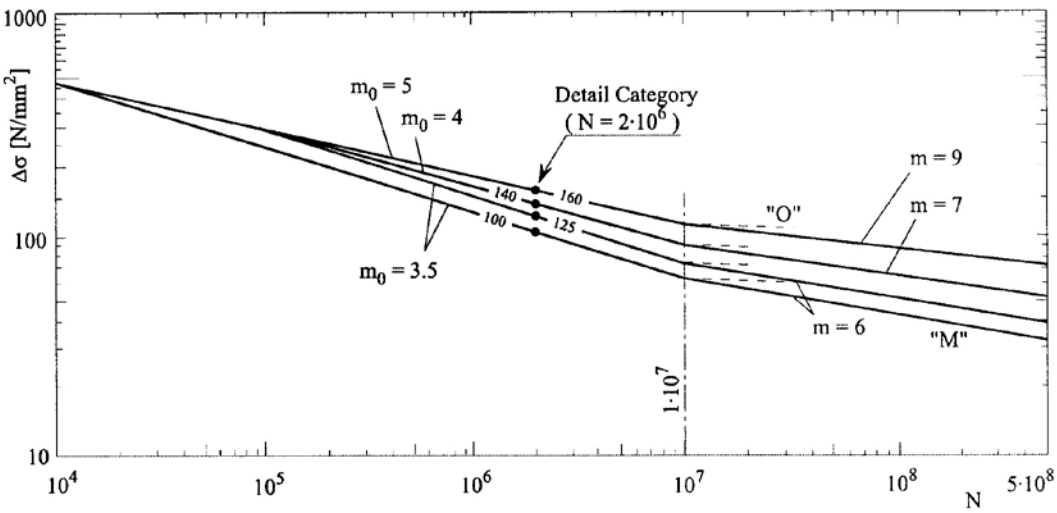

Figure 3.17 "S-N" curves for notches at plate edge of steel plate

6.2.2 Material effect (cf_m)

The correction factor is calculated according Table 3.28

6.2.3 Effect of mean stress (cf_R)

The correction factor is calculated according Table 3.29

Table 3.28 Material effect (cf_m)

cf_m	Material
1.0	For welded joints
$1+\frac{{}^{*}R_{eH}-235}{1200}$	For free edges of steel plates
1.0	For aluminum alloys
$^{*}R_{eH}$ *Minimum nominal upper yield point of the steel [N/mm²].*	

6.2.4 Effect of weld shape (cf_w)

In normal cases:

$cf_w = 1.0$

A factor $cf_w > 1.0$ applies for welds treated e.g. by grinding. By grinding, the surface defects such as slag inclusions, porosity and crack-like undercuts shall be removed and a smooth transition from the weld to the base material shall be achieved. Final grinding shall be performed transversely to the weld direction. The depth should be approx. 0.5 mm. larger than that of visible undercuts. For ground weld toes of fillet and K-butt welds machined by

Table 3.29. Effect of mean stress (cf_R)

cf_R	Range
1.0	tensile pulsating stresses $\sigma_m \geq \frac{\Delta\sigma_{max}}{2}$
$1 + c^* \left[1 - \frac{2\sigma_m}{\Delta\sigma_{max}}\right]$	alternating stresses $-\frac{\Delta\sigma_{max}}{2} \leq \sigma_m \leq \frac{\Delta\sigma_{max}}{2}$
$1 + 2c^*$	compressive pulsating stresses $\sigma_m \leq -\frac{\Delta\sigma_{max}}{2}$
** c = 0*	*for welded joints subjected to constant stress cycles (stress range spectrum C)*
= 0.15	*for welded joints subjected to variable stress cycles (corresponding to stress range spectrum A or B)*
= 0.3	*for free plate edges*

- Disc grinder: $cf_w = 1.15$

- Burr grinder: $cf_w = 1.30$

For butt welds ground flush the corresponding detail category has to be chosen, e.g. type A1, A10 or A12 in Table 3.32.

For endings of stiffeners or brackets, e.g. type C4 or C6 in Table 3.32, which have a full penetration weld and are completely ground flush to achieve a notch-free transition, the following factor applies:

$$cf_w = 1.4$$

The assessment of a local post-weld treatment of the weld surface and the weld toe by other methods, e.g. ultrasonic impact treatment has to be agreed on in each case.

6.2.5 Influence of importance of structural element (cf_i)

In general the following applies:

$$cf_i = 1.0$$

For secondary structural elements failure of which may cause failure of larger structural areas, the correction factor cf_i is to be taken as:

$$cf_i = 0.9$$

For notches at plate edges in general the following correction factor is to be taken which takes into account the radius of rounding.

$$cf_i = 0.9 + 5/r \leq 1.0.$$

r = Notch radius in [mm]; for elliptical rounding, the mean value of the two main half axes may be taken.

6.2.6 Plate thickness effect

6.2.6.1 In order to account for the plate thickness effect, application of the reduction factor cf_t is required by **TL** for butt welds oriented transversely to the direction of applied stress for plate thicknesses t > 25 mm.

$$cf_t = \left(\frac{25}{t_{eff}}\right)^n$$

where,

n : The thickness correction exponent (see Table 3.30).

t_{eff} : The effective thickness, (see Table 3.31).

6.2.6.2 The plate thickness correction factor is not required in the case of assessment based on effective notch stress procedure or fracture mechanics.

6.2.6.3 The same rules as for steel are recommended for aluminium plates.

6.2.6.4 For all other weld connections consideration of the thickness effect may be required subject to agreement with **TL**.

Table 3.30 Thickness correction exponents

Joint category	Condition	n
Cruciform joints, transverse T-joints, plates with transverse attachments, ends of longitudinal stiffeners	as-welded	0,3
Cruciform joints, transverse T-joints, plates with transverse attachments, Ends of longitudinal stiffeners	toe ground	0,2
Transverse butt welds	as-welded	0,2
Butt welds ground flush, base material, longitudinal welds or attachments to plate edges	any	0,1

Table 3.31 The effective thickness

t_{eff}	Cases
t	$L_T / t > 2$
$t_{eff} = 0.5\ L_T$ or $t_{eff} = t$ whichever is the larger	$L_T / t \leq 2$

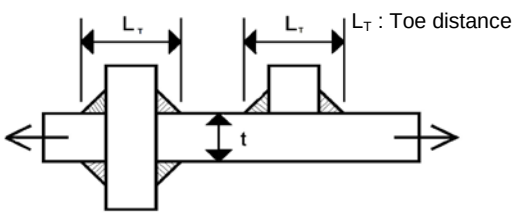

7. Structural Hot Spot Stresses

7.1 General

7.1.1 Alternatively to the procedure described in the preceding paragraphs, the fatigue strength analysis for welded joints may be performed on the basis of local stresses.

7.1.2 The structural or geometric stress **σs** at the Hot Spot includes all stress raising effects of a structural detail excluding that due to the local weld profile itself. For common plate and shell structures in ships the assessment based on the structural Hot Spot Stress is normally sufficient.

7.1.3 The structural stress is defined as the stress being extrapolated to the weld toe excluding the local stress concentration in the local vicinity of the weld, (see Figure 3.18).

7.2 Determination of Structural Hot Spot Stress

The structural Hot Spot Stress can be determined either by measurement or by calculation e.g. by the finite element method using shell or volumetric models under the assumption of linear stress distribution over the plate thickness.

The requirements regarding the calculation and measurement of Hot Spot Stress are given in 7.3.

Normally, the stress is extrapolated linearly to the weld toe over two reference points which are located 0.5 and 1.5 x plate thickness away from the weld toe. In some cases the structural stress can be calculated from the nominal stress σ_n and a structural stress concentration factor K_s, which has been derived from parametric investigations using the methods mentioned. Parametric equations should be used with due consideration of their inherent limitations and accuracy.

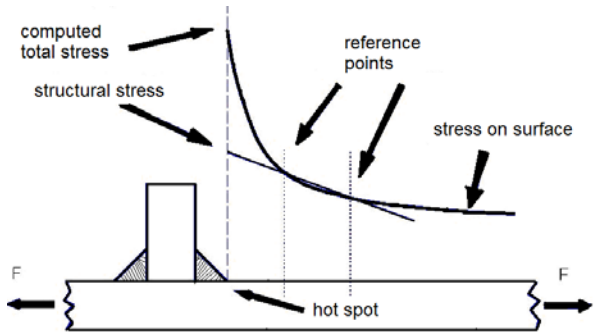

Figure 3.18 Structural stress

7.2.1 For the fatigue strength analysis based on structural stress, the "S-N" curves shown in Figure 3.16 apply with the following reference values:

$\Delta\sigma_R$ = 100 (resp. 36 for Al)
for the butt welds types A1-A6 and for K-butt welds with fillet welded ends, e.g. type D1 in Table 3.32, and for fillet welds which carry no load or only part of the load of the attached plate, e.g. type C1-C9 in Table 3.32

$\Delta\sigma_R$ = 90 (resp. 32 for Al)
for fillet welds, which carry the total load of the attached plate, e.g. types D2 in Table 3.32.

In special cases, where e.g. the structural stresses are obtained by non-linear extrapolation to the weld toe and where they contain a high bending portion, increased reference values of up to 15 % can be allowed.

7.2.2 The reference value $\Delta\sigma_{Rc}$ of the corrected "S-N" curve is to be determined according to 6.2, taking into account the following additional correction factor which describes further influencing parameters not included in the calculation model such as e.g. misalignment:

$$f_s = \frac{1}{k'_m - \frac{\Delta\sigma_{s,b}}{\Delta\sigma_{s,max}}(k'_m - 1)}$$

$\Delta\sigma_{s,max}$ = Applied peak stress range within a stress range spectrum

$\Delta\sigma_{s,b}$ = Bending portion of $\Delta\sigma_{s,max}$

k'_m = k_m -0.05

k_m = Stress increase factor due to misalignments under axial loading, at least k_m acc. 4.3.

The permissible stress range or cumulative damage ratio, respectively, has to be determined according to 5.2.

7.2.3 In addition to the assessment of the structural stress at the weld toe, the fatigue strength with regard to root failure has to be considered by analogous application of the respective detail category, e.g. type D3 of Table 3.32. In this case the relevant stress is the stress in the weld cross section caused by the axial stress in the plate perpendicular to the weld. It is to be converted at a ratio of t/2a.

7.3 Measurement of Structural Hot Spot Stress

The recommendations and requirements regarding the measurement of Hot Spot Stress provided in this section does not apply to tubular joints. Such measurements shall be considered and accepted by **TL** on their own merit.

7.3.1 The recommended placement and number of strain gauges depends on the extent of shell bending stresses, the wall thickness and the type of structural stress.

7.3.2 The center point of the first gauge, whose gauge length should not exceed **0.2 t**, is located at a distance of **0.4 t** from the weld toe. If this is not possible for example due to a small plate thickness, the leading edge of the gauge should be placed at a distance of **0.3 t** from the weld toe. The following extrapolation procedure and number of gauges are recommended by **TL** (Figure 3.19)

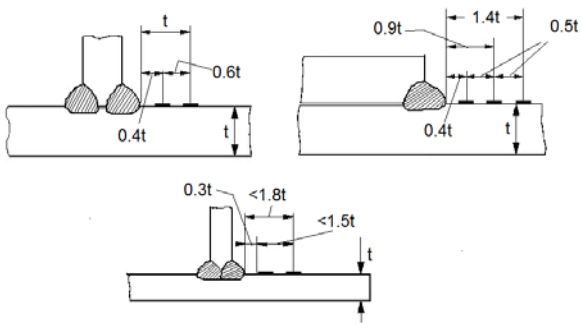

Figure 3.19 Strain gauges in plate structures

7.3.2.1 For weld toe on plate surface

a) Two gauges at reference points **0.4 t** and **1.0 t** and linear extrapolation:

$$\varepsilon_h = 0.67\left(2.5\varepsilon_{0.4t} - \varepsilon_t\right)$$

b) Three gauges at reference points **0.4 t**, **0.9 t** and **1.4 t**, and quadratic extrapolation. This method is particularly suitable for cases of pronounced non-linear structural stress increase towards the Hot Spot,

$$\varepsilon_h = 0.72\left(3.5\varepsilon_{0.4t} - 3.112\varepsilon_{0,9t} + \varepsilon_{1,4t}\right)$$

Precise positioning is not necessary if multi-grid strip gauges are used, since the results can be used to plot the stress distribution approaching the weld toe. The stresses at the required positions can then be read from the fitted curve.

7.3.2.2 For weld toe at plate edge;

Three gauges are attached to the plate edge at reference points 4, 8 and 12 mm distant from the weld toe. The Hot Spot Strain is determined by quadratic extrapolation to the weld toe:

$$\varepsilon_h = 3\left(\varepsilon_{4mm} - \varepsilon_{8mm} + \frac{1}{3}\varepsilon_{12mm}\right)$$

7.3.3 If the stress state is close to uniaxial, the approximation to the structural Hot Spot Stress is obtained approximately from fallowing eqn.

$$\sigma_h = E.\varepsilon_h$$

For biaxial stress states, the actual stress may be up to 10% higher than that obtained from above eqn.. In this case, use of rosette strain gauges is recommended. If the ratio of longitudinal to transversal strains;

$$\varepsilon_x . \ , \ \varepsilon_y$$

is available, for example from FEA, the structural Hot Spot Stress σ_h can then be resolved from below eqn., assuming that this principal stress is approximately perpendicular to the weld toe.

$$\sigma_h = E.\varepsilon_x \frac{1 + \nu \frac{\varepsilon_y}{\varepsilon_x}}{1 - \nu^2}$$

The above equations also apply if strain ranges are measured, producing the range of structural Hot Spot Stress $\mathbf{\Delta\sigma_h}$.

Table 3.32 Catalogue of details

A. Butt welds, transverse loaded				
Type No.	**Joint configuration showing mode of fatigue cracking and stress σ considered**	**Description of joint**	**Detail category $\Delta\sigma_R$**	
			Steel	**Al**
A1		Transverse butt weld ground flush to plate, 100% NDT (Non-Destructive Testing)	112	45
A2		Transverse butt weld made in the shop in flat position, max. weld reinforcement 1 mm + 0.1 x weld width, smooth transitions, NDT	90	36
A3		Transverse butt weld not satisfying conditions for joint type No.A2, NDT Al: Butt weld with toe angle $\leq 50^o$	80	32 25
A4	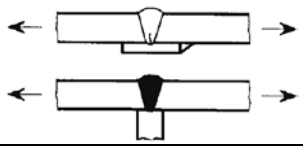	Transverse butt weld on backing strip or three-plate connection with unloaded branch Butt weld, welded on ceramic backing, root crack	71 80	25 28
A5	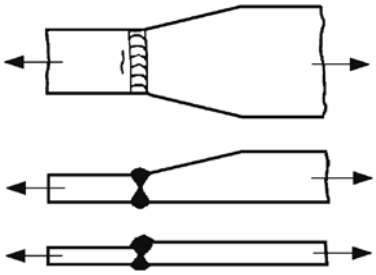	Transverse butt welds between plates of different widths or thickness, NDT as for joint type No.A2, slope 1: 5 as for joint type No.A2, slope 1: 3 as for joint type No.A2, slope 1: 2 as for joint type No.A3, slope 1: 5 as for joint type No.A3, slope 1: 3 as for joint type No.A3, slope 1: 2 For the third sketched case the slope results from the ratio of the difference in plate thicknesses to the breadth of the welded seam. Additional bending stress due to thickness change to be considered, see also D.5.1.3.	 90 80 71 80 71 63	 32 28 25 25 22 20
A6		Transverse butt welds welded from one side without backing bar, full penetration root controlled by NDT not NDT For tubular profiles $\Delta\sigma_R$ may be lifted to the next higher detail category.	 71 36	 28 12
A7		Partial penetration butt weld; the stress is to be related to the weld throat sectional area, weld overfill not to be taken into account.	36	12

Table 3.32 Catalogue of details (continued)

A. Butt welds, transverse loaded				
Type No.	**Joint configuration showing mode of fatigue cracking and stress σ considered**	**Description of joint**	**Detail category $\Delta\sigma_R$**	
			Steel	**Al**
A8	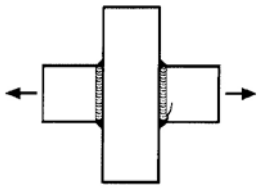	Full penetration butt weld at crossing flanges Welded from both sides.	50	18
A9	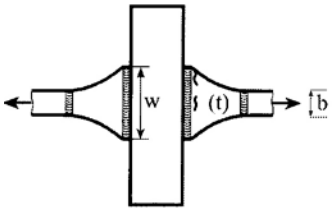	Full penetration butt weld at crossing flanges Welded from both sides Cutting edges in the quality according to type E2 or E3 Connection length w ≥ 2b $\sigma_{nominal} = \frac{F}{b \cdot t}$	63	22
A10	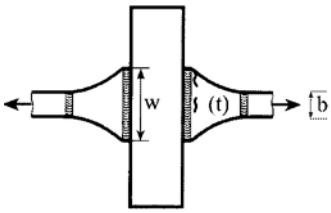	Full penetration butt weld at crossing flanges Welded from both sides, NDT, weld ends ground, butt weld ground flush to surface Cutting edges in the quality according to type E2 or E3 with $\Delta\sigma_R$ = 125 Connection length w ≥ 2b $\sigma_{nominal} = \frac{F}{b \cdot t}$	80	32
A11	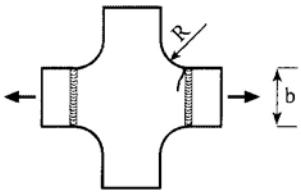	Full penetration butt weld at crossing flanges welded from both sides made in shop at flat position, radius transition with R ≥ b Weld reinforcement ≤ 1 mm + 0.1 x weld width, smooth transitions, NDT, weld ends ground Cutting edges in the quality according to type E2 or E3 with $\Delta\sigma_R$ = 125	90	36
A12	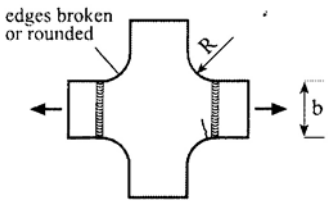	Full penetration butt weld at crossing flanges, radius transition with R ≥ b Welded from both sides, no misalignment, 100 % NDT, weld ends ground, butt weld ground flush to surface Cutting edges broken or rounded according to type E2	100	40

Table 3.32 Catalogue of details (continued)

B. Longitudinal load-carrying weld				
Type No.	**Joint configuration showing mode of fatigue cracking and stress σ considered**	**Description of joint**	**Detail category $\Delta\sigma_R$**	
			Steel	**Al**
B1	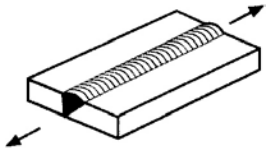	Longitudinal butt welds both sides ground flush parallel to load direction without start/stop positions, NDT with start/stop positions	 125 125 90	 50 50 36
B2	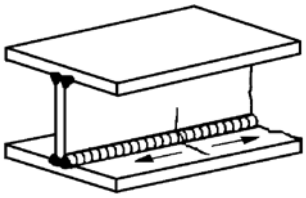	Continuous automatic longitudinal fully penetrated K-butt without stop/start positions (based on stress range in flange adjacent to weld)	125	50
B3	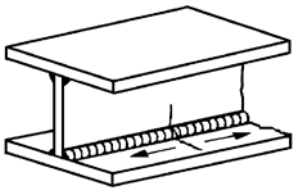	Continuous automatic longitudinal fillet weld penetrated K-butt weld without stop/start positions (based on stress range in flange adjacent to weld)	100	40
B4	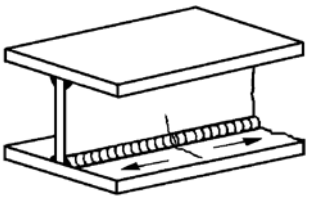	Continuous manual longitudinal fillet or butt weld (based on stress range in flange adjacent to weld)	90	36

Table 3.32 Catalogue of details (continued)

Type No.	Joint configuration showing mode of fatigue cracking and stress σ considered	Description of joint	Detail category $\Delta\sigma_R$	
			Steel	Al
B5	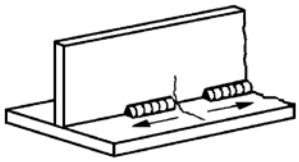	Intermittent longitudinal fillet weld (based on stress range in flange at weld ends) In presence of shear τ in the web, the detail category has to be reduced by the factor (1 – Δτ / Δσ), but not below 36 (steel) or 14 (Al). τ/σ = 0 0.0 - 0.2 0.2 - 0.3 0.3 - 0.4 0.4 - 0.5 0.5 - 0.6 0.6 - 0.7 > 0.7	 80 71 63 56 50 45 40 36	 32 28 25 22 20 18 16 14
B6	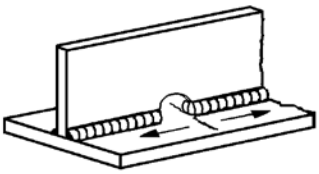	Longitudinal butt weld, fillet weld or intermittent fillet weld with cut outs (based on stress range in flange at weld ends) If cut out is higher than 40 % of web height In presence of shear τ in the web, the detail category has to be reduced by the factor (1 – Δτ / Δσ), but not below 36 (steel) or 14 (Al). τ/σ = 0 0.0 - 0.2 0.2 - 0.3 0.3 - 0.4 0.4 - 0.5 0.5 - 0.6 > 0.6 *Note* *For Ω-shaped scallops, an assessment based on local stresses in recommended.*	 71 63 56 50 45 40 36	 28 25 22 20 18 16 14

Table 3.32 Catalogue of details (continued)

C. Non-load-carrying attachments				
Type No.	**Joint configuration showing mode of fatigue cracking and stress σ considered**	**Description of joint**	**Detail category $\Delta\sigma_R$**	
			Steel	**Al**
C1	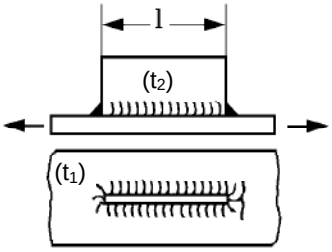	Longitudinal gusset welded on beam flange, bulb or plate: ℓ ≤ 50 mm 50 mm < ℓ ≤ 150 mm 150 mm < ℓ ≤ 300 mm ℓ > 300 mm For $t_2 \leq 0.5\ t_1$, $\Delta\sigma_R$ may be increased by one category, but not over 80 (steel) or 28 (Al); not valid for bulb profiles. When welding close to edges of plates or profiles (distance less than 10 mm) and/or the structural element is subjected to bending, $\Delta\sigma_R$ is to be decreased by one category.	 80 71 63 56	 28 25 20 18
C2	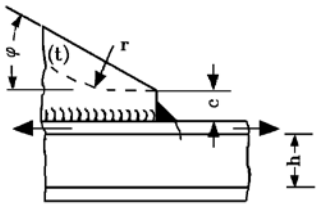	Gusset with smooth transition (sniped end or radius) welded on beam flange, bulb or plate; c ≤ 2 t_2, max. 25 mm r ≥ 0.5 h r < 0.5 h or φ ≤ 20° φ > 20° see joint type C1 For $t_2 \leq 0.5\ t_1$, $\Delta\sigma_R$ may be increased by one category; not valid for bulb profiles. When welding close to the edges of plates or profiles (distance less than 10 mm), $\Delta\sigma_R$ is to be decreased by one category.	 71 63	 25 20
C3	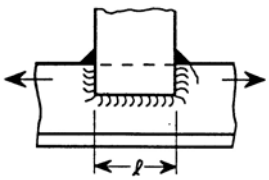	Fillet welded non-load-carrying lap joint welded to longitudinally stressed component. – flat bar – to bulb section – to angle section For ℓ > 150 mm, $\Delta\sigma_R$ has to be decreased by one category, while for ℓ ≤ 50 mm, $\Delta\sigma_R$ may be increased by one category. If the component is subjected to bending, $\Delta\sigma_R$ has to be reduced by one category.	 56 56 50	 20 20 18

Table 3.32 Catalogue of details (continued)

C. Non-load-carrying attachments				
Type No.	**Joint configuration showing mode of fatigue cracking and stress σ considered**	**Description of joint**	**Detail category $\Delta\sigma_R$**	
			Steel	**Steel**
C4	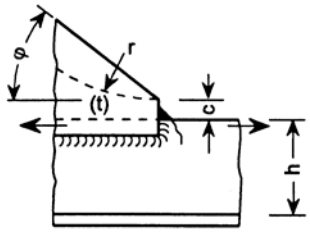	Fillet welded lap joint with smooth transition (sniped end with φ ≤ 20° or radius) welded to longitudinally stressed component. – flat bar – to bulb section – to angle section c ≤ 2 t, max. 25 mm	 56 56 50	 20 20 18
C5	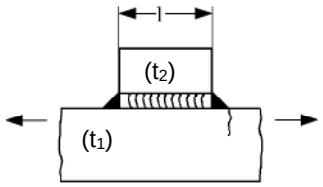	Longitudinal flat side gusset welded on plate or beam flange edge ℓ ≤ 50 mm 50 mm < ℓ ≤ 150 mm 150 mm < ℓ ≤ 300 mm ℓ > 300 mm For $t_2 \leq 0.7\ t_1$, $\Delta\sigma_R$ may be increased by one category, but not over 56 (steel) or 20 (Al). If the plate or beam flange is subjected to in-plane bending, $\Delta\sigma_R$ has to be decreased by one category.	 56 50 45 40	 20 18 16 14
C6	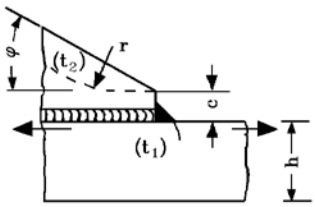	Longitudinal flat side gusset welded on plate edge or beam flange edge, with smooth transition (sniped end or radius); c ≤ 2 t_2, max. 25 mm r ≥ 0.5 h r < 0.5 h or φ ≤ 20° φ > 20° see joint type C5 For $t_2 \leq 0.7\ t_1$, $\Delta\sigma_R$ may be increased by one category.	 50 45	 18 16
C7	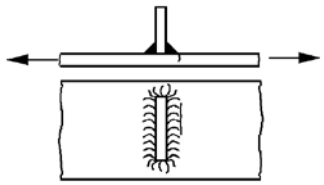	Transverse stiffener with fillet welds (applicable for short and long stiffeners)	80	28
C8	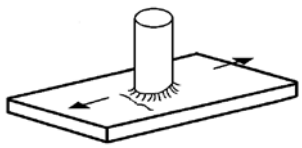	Non-load-carrying shear connector	80	28

Table 3.32 Catalogue of details (continued)

C. Non-load-carrying attachments				
Type No.	**Joint configuration showing mode of fatigue cracking and stress σ considered**	**Description of joint**	**Detail category $\Delta\sigma_R$**	
			Steel	**Al**
C9	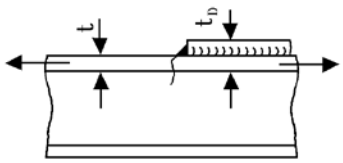	End of long doubling plate on beam, welded ends (based on stress range in flange at weld toe) $t_D \leq 0.8\ t$ $0.8\ t < t_D \leq 1.5\ t$ $t_D > 1.5\ t$ The following features increase $\Delta\sigma_R$ by one category accordingly: – reinforced ends according to Section 20, Figure 20.4 – weld toe angle ≤ 30 ° – length of doubling ≤ 300 mm For length of doubling ≤ 150 mm, $\Delta\sigma_R$ may be increased by two categories.	 56 50 45	 20 18 16

D. Cruciform joints and T-joints				
Type No.	**Joint configuration showing mode of fatigue cracking and stress σ considered**	**Description of joint**	**Detail category $\Delta\sigma_R$**	
			Steel	**Al**
D1	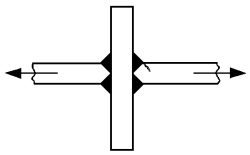	Cruciform or tee-joint K-butt welds with full penetration or with defined incomplete root penetration according to Section 20, Figure 20.9. cruciform joint tee-joint	 71 80	 25 28
D2	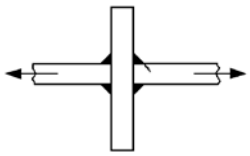	Cruciform or tee-joint with transverse filet welds, toe failure (root failure particularly for throat thickness a < 0.7 · t, see joint type D3) cruciform joint tee-joint	 63 71	 22 25

Table 3.32 Catalogue of details (continued)

D. Cruciform joints and T-joints				
Type No.	**Joint configuration showing mode of fatigue cracking and stress σ considered**	**Description of joint**	**Detail category $\Delta\sigma_R$**	
			Steel	**Al**
D3	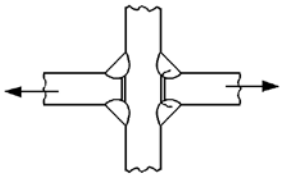	Welded metal in transverse load-carrying filet welds at cruciform or tee-joint, root failure (based on stress range in weld throat), see also joint type No. D2 a ≥ t/3 a < t/3 ***Note:*** *Crack initiation at weld root*	 36 40	 12 14
D4	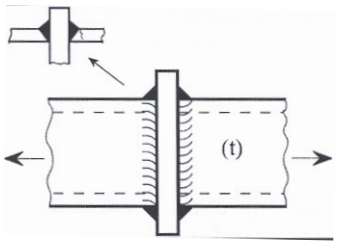	Full penetration weld at the connection between a hollow section (e.g. pillar) and a plate, for tubular section for rectangular hollow section For t ≤ 8 mm, $\Delta\sigma_R$ has to be decreased by one category.	 56 50	 20 18
D5	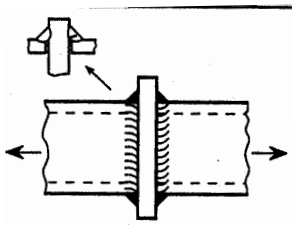	Fillet weld at the connection between a hollow section (e.g. pillar) and a plate, for tubular section for rectangular hollow section The stress is to be related to the weld sectional area. For t ≤ 8 mm, $\Delta\sigma_R$ has to be decreased by one category.	 45 40	 16 14
D6	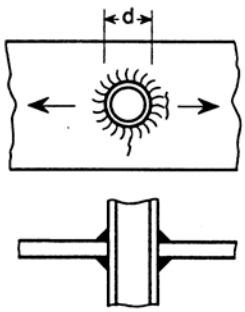	Continuous butt or fillet weld connecting a pipe penetrating through a plate d ≤ 50 mm d > 50 mm ***Note*** *For large diameters an assessment based on local stress is recommended.*	 71 63	 25 22

Table 3.32 Catalogue of details (continued)

E. Unwelded base material				
Type No.	**Joint configuration showing mode of fatigue cracking and stress σ considered**	**Description of joint**	**Detail category $\Delta\sigma_R$**	
			Steel	**Al**
E1	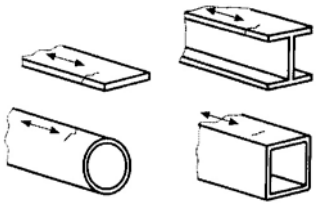	Rolled or extruded plates and sections as well as seamless pipes, no surface or rolling defects	160 (m_0=5)	71 (m_0=5)
E2		Plate edge sheared or machine-cut by any thermal process with surface free of cracks and notches, cutting edges broken or rounded. Stress increase due to geometry of cut-outs to be considered. **(1)**	140 (m_0=4)	40 (m_0=4)
E3	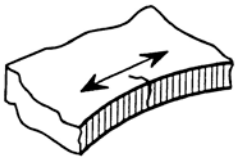	Plate edge not meeting the requirements of type E2, but free from cracks and severe notches. Machine cut or sheared edge: Manually thermally cut: Stress increase due to geometry of cut-outs to be considered.	125 (m_0=3.5) 100 (m_0=3.5)	36 (m_0=3.5) 32 (m_0=3.5)

(1) *Stress concentrations caused by an opening to be considered as follows:*

$\Delta\sigma_{max} = K_t \cdot \Delta\sigma_N$

K_t : *Notch factor according to Section B, 8*

$\Delta\sigma_{max}$: *Nominal stress range related to net section*

Alternatively direct determination of $\Delta\sigma_{max}$ from FE-calculation, especially in case of hatch openings or multiple arrangement of openings.

Table 3.33 Various intersections

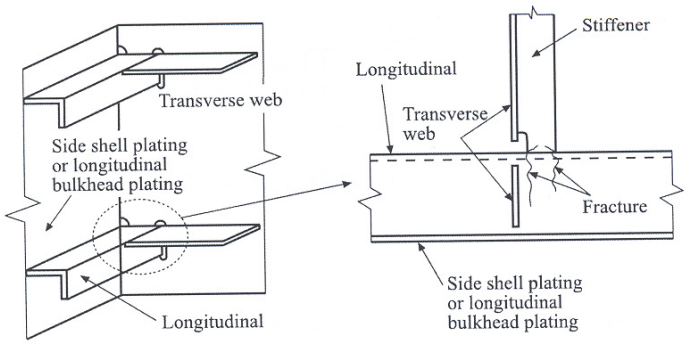

Joint configuration Loads Locations being at risk for cracks	Description of joint	Detail category $\Delta\sigma_R$ steel			
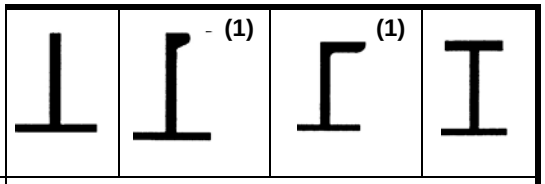			- (1)	(1)	
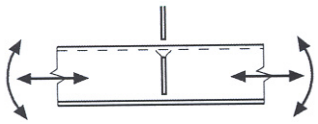	None watertight intersection without heel stiffener	80	80	80	80
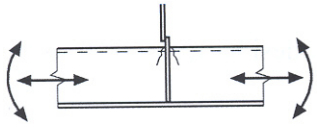	Watertight intersection without heel stiffener (without cyclic load on the transverse member)	71	71	71	71
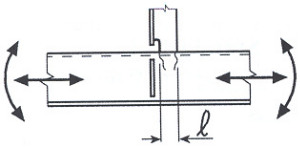 (2)	With heel stiffener direct connection ℓ≤150 ℓ>150 overlapping connection ℓ≤150 ℓ>150	 45 40 50 45	 56 50 50 45	 56 50 45 40	 63 56
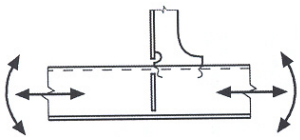 (2)	With heel stiffener and integrated bracket	45	56	56	63
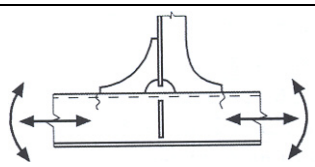	With heel stiffener and integrated bracket and with backing bracket direct connection overlapping connection	 50 56	 63 56	 63 50	 71
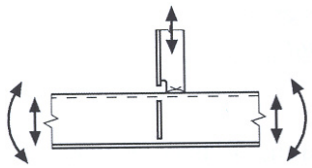	With heel stiffener but considering the load transferred to the stiffener crack initiation at weld toe crack initiation at weld root Stress increase due to eccentricity and shape of cut out has to be observed.	 80	 71 40	 71 40	 71 40

(1) *Additional stresses due to asymmetric sections have to be observed, see Section B, 10.*
(2) *To be increased by one category, when longitudinal loads only*

Table 3.34 Examples of structure or equipment details

Structure or equipment detail	Description of structure or equipment detail	Type No.	Joint configuration showing mode of fatigue cracking and stress σ considered	Description of joint	Detail category $\Delta\sigma_R$ Steel
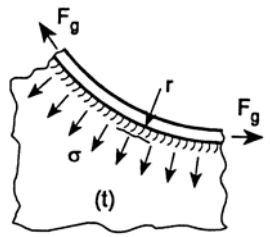	Unstiffened flange to web joint, to be assessed according to type D1, D2 or D3, depending on the type of joint: $\sigma = \frac{F_g}{r \cdot t}$ Furthermore, the stress in longitudinal weld direction has to be assessed according to type B2 ÷ B4. In case of additional shear or bending, also the highest principle stress may become relevant in the web, see B.1.4.	D1	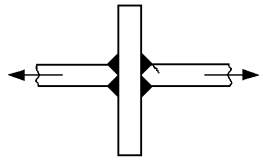	Cruciform or tee-joint K-butt welds with full penetration or with defined incomplete root penetration according to Section 20, Figure 20.9. Cruciform joint Tee-joint	 71 80
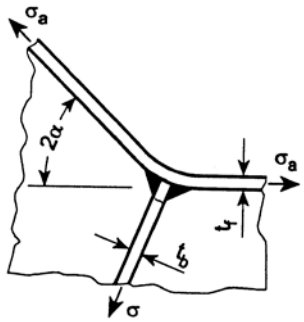	Joint at stiffened knuckle of a flange, to be assessed according to type D1, D2 or D3, depending on the type of joint. The stress in the stiffener at the knuckle can normally be calculated as follows: $\sigma = \sigma_a \frac{t_f}{t_b} 2 \sin \alpha$	D2	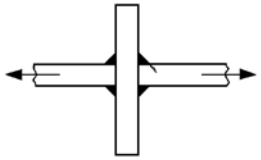	Cruciform or tee-joint with transverse fillet welds, toe failure (root failure particularly for throat thickness a < 0.7 · t, see joint type D3) Cruciform joint Tee-joint.	 63 71
		D3	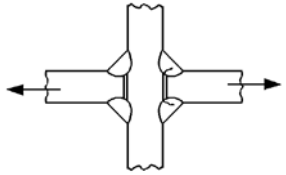	Welded metal in transverse load-carrying fillet welds at cruciform or tee-joint, root failure (based on stress range in weld throat), see also joint type No.D2	36
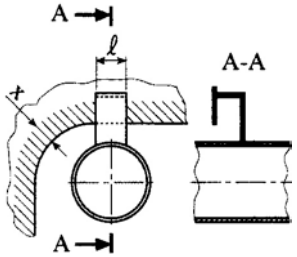	Holder welded in way of an opening and arranged parallel to the edge of the opening. Not valid for hatch corner	C1	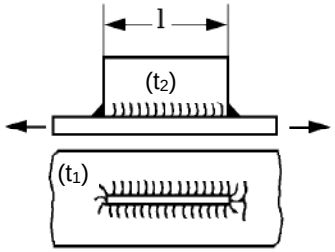	ℓ ≤ 150 mm In way of the rounded corner of an opening with the radius r a minimum distance x from the edge to be kept (hatched area): x [mm] = 15 + 0.175 · r [mm] 100 mm ≤ r ≤ 400 mm In case of an elliptical rounding, the mean value is to be applied to both axes.	71

Table 3.34 Examples of structure or equipment details

Structure or equipment detail	Description of structure or equipment detail	Type No.	Joint configuration showing mode of fatigue cracking and stress σ considered	Description of joint	Detail category $\Delta\sigma_R$ Steel
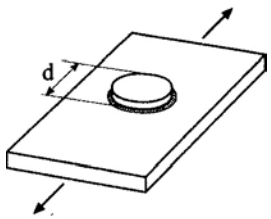	Circular doubler plate with max. 150 mm. diameter.	C9	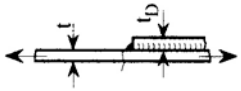	$t_D \leq 0.8\ t$ $0.8\ t < t_D \leq 1.5\ t$ $t_D > 1.5\ t$	71 63 56
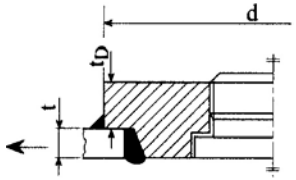	Drain plugs according to DIN 87721-1 (diameter about 190 mm) Assessment corresponding to doubling plate.	C9	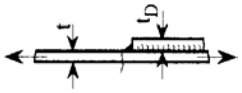	$t_D \leq 0.8\ t$ $0.8\ t < t_D \leq 1.5\ t$ $t_D > 1.5\ t$ $150 < d \leq 300$ mm. d = Diameter	63 56 50
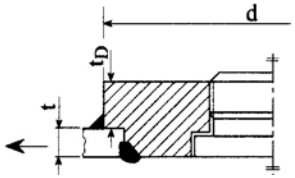	Drain plugs with partial penetration butt weld	A7		Partial penetration butt weld; the stress is to be related to the weld throat sectional area, weld overfill not to be taken into account	36
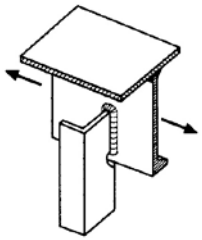	The detail category is also valid for not fully circumferential welded holders For stiffeners loaded in bending $\Delta\sigma_R$ to be downgraded by one category	C7	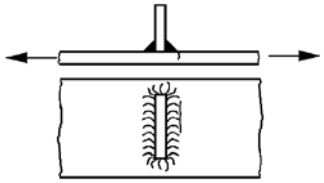	Transverse stiffener with fillet welds (applicable for short and long stiffeners)	80

E. Testing Procedures of Watertight Compartments

1. General

These test procedures are to confirm the watertightness of tanks and watertight boundaries and the structural adequacy of tanks which consist of the watertight subdivisions of ships. These procedures may also be applied to verify the weathertightness of structures and shipboard outfitting. The tightness of all tanks and watertight boundaries of ships during new construction and those relevant to major conversions or major repairs **(1)** is to be confirmed by these test procedures prior to the delivery of the ship.

2. Application

2.1 All gravity tanks **(2)** and other boundaries required to be watertight or weathertight are to be tested in accordance with sub-section E. and proven to be tight and structurally adequate as follows:

2.1.1 Gravity Tanks for their tightness and structural adequacy,

2.1.2 Watertight Boundaries Other Than Tank Boundaries for their watertightness, and

2.1.3 Weathertight Boundaries for their weathertightness.

2.2 The testing of cargo containment systems of liquefied gas carriers is to be in accordance with standards deemed appropriate by **TL.**

2.3 The testing of structures not listed in Table 3.35 or 3.36 is to be specially considered.

3. Test Types and Definitions

3.1 The following two types of tests are specified in this requirement:

Structural Test: A test to verify the structural adequacy of tank construction. This may be a hydrostatic test or, where the situation warrants, a hydropneumatic test.

Leak Test: A test to verify the tightness of a boundary. Unless a specific test is indicated, this may be a hydrostatic / hydropneumatic test or an air test. A hose test may be considered an acceptable form of leak test for certain boundaries, as indicated by Footnote **(3)** of Table 3.35.

3.2 The definition of each test type is as follows:

Hydrostatic Test (Leak and Structural): A test wherein a space is filled with a liquid to a specified head.

Hydropneumatic Test (Leak and structural): A test combining a hydrostatic test and an air test wherein a space is partially filled with a liquid and pressurized with air.

Hose Test (Leak): A test to verify the tightness of a joint by a jet of water with the joint visible from the opposite side.

Air Test (Leak): A test to verify tightness by means of air pressure differential and leak indicating solution. It includes tank air test and joint air tests, such as compressed air fillet weld tests and vacuum box tests.

Compressed Air Fillet Weld Test (Leak): An air test of fillet welded tee joints wherein leak indicating solution is applied on fillet welds.

Vacuum Box Test (Leak): A box over a joint with leak indicating solution applied on the welds. A vacuum is created inside the box to detect any leaks.

---

(1) *Major repair means a repair affecting structural integrity.*

(2) *Gravity tank means a tank that is subject to vapour pressure not greater than 70 kPa.*

Ultrasonic Test (Leak): A test to verify the tightness of the sealing of closing devices such as hatch covers by means of ultrasonic detection techniques.

Penetration Test (Leak): A test to verify that no visual dye penetrant indications of potential continuous leakages exist in the boundaries of a compartment by means of low surface tension liquids (i.e. dye penetrant test).

4. Test Procedures

4.1 General

Tests are to be carried out in the presence of a Surveyor at a stage sufficiently close to the completion of work with all hatches, doors, windows, etc. installed and all penetrations including pipe connections fitted, and before any ceiling and cement work is applied over the joints. Specific test requirements are given in 4.4 and Table 3.35. For the timing of the application of coating and the provision of safe access to joints, see 4.5, 4.6 and Table 3.37.

4.2 Structural test procedures

4.2.1 Type and time of test

Where a structural test is specified in Table 3.35 or Table 3.36, a hydrostatic test in accordance with 4.4.1 will be acceptable. Where practical limitations (strength of building berth, light density of liquid, etc.) prevent the performance of a hydrostatic test, a hydropneumatic test in accordance with 4.4.2 may be accepted instead.

A hydrostatic test or hydropneumatic test for the confirmation of structural adequacy may be carried out while the vessel is afloat, provided the results of a leak test are confirmed to be satisfactory before the vessel is afloat.

4.2.2 Testing Schedule for New Construction or Major Structural Conversion

4.2.2.1 The tank boundaries are to be tested from at least one side. The tanks for structural test are to be selected so that all representative structural members are tested for the expected tension and compression.

4.2.2.2 Structural tests are to be carried out for at least one tank of a group of tanks having structural similarity (i.e. same design conditions, alike structural configurations with only minor localized differences determined to be acceptable by the attending Surveyor) on each vessel provided all other tanks are tested for leaks by an air test. The acceptance of leak testing using an air test instead of a structural test does not apply to cargo space boundaries adjacent to other compartments in tankers and combination carriers or to the boundaries of tanks for segregated cargoes or pollutant cargoes in other types of ships.

4.2.2.3 Additional tanks may require structural testing if found necessary after the structural testing of the first tank.

4.2.2.4 Where the structural adequacy of the tanks of a vessel were verified by the structural testing required in Table 3.35, subsequent vessels in the series (i.e. sister ships built from the same plans at the same shipyard) may be exempted from structural testing of tanks, provided that:

4.2.2.4.1 Watertightness of boundaries of all tanks is verified by leak tests and thorough inspections are carried out.

4.2.2.4.2 Structural testing is carried out for at least one tank of each type among all tanks of each sister vessel.

4.2.2.4.3 Additional tanks may require structural testing if found necessary after the structural testing of the first tank or if deemed necessary by the attending Surveyor.

For cargo space boundaries adjacent to other compartments in tankers and combination carriers or boundaries of tanks for segregated cargoes or pollutant cargoes in other types of ships, the provisions of paragraph 4.2.2.2 shall apply in lieu of paragraph 4.2.2.4.2.

4.2.2.5 Sister ships built (i.e. keel laid) two years or more after the delivery of the last ship of the series, may be tested in accordance with 4.2.2.4 at the discretion of **TL**, provided that:

4.2.2.5.1 General workmanship has been maintained (i.e. there has been no discontinuity of shipbuilding or significant changes in the construction methodology or technology at the yard, shipyard personnel are appropriately qualified and demonstrate an adequate level of workmanship as determined by the **TL**) and:

4.2.2.5.2 An enhanced NDT programme is implemented for the tanks not subject to structural tests.

4.2.2.6 For the watertight boundaries of spaces other than tanks structural testing may be exempted, provided that the watertightness of boundaries of exempted spaces is verified by leak tests and inspections. Structural testing may not be exempt and the requirements for structural testing of tanks in 4.2.2.1 to 4.2.2.5 shall apply, for ballast holds, chain lockers and a representative cargo hold if intended for in-port ballasting.

4.3 Leak test procedures

For the leak tests specified in Table 3.35, tank air tests, compressed air fillet weld tests, vacuum box test in accordance with 4.4.4 through 4.4.6, or their combination, will be acceptable. Hydrostatic or hydropneumatic tests may also be accepted as leak tests provided that 4.5, 4.6 and 4.7 are complied with. Hose tests will also be acceptable for such locations as specified in Table 3.35, Footnote 3 in accordance with 4.4.3.

Air tests of joints may be carried out in the block stage provided that all work on the block that may affect the tightness of a joint is completed before the test. See also 4.5.1 for the application of final coatings and 4.6 for the safe access to joints and the summary in Table 3.37.

4.4 Test Methods

4.4.1 Hydrostatic Test

Unless another liquid is approved, the hydrostatic tests are to consist of filling the space with fresh water or sea water, whichever is appropriate for testing, to the level specified in Table 3.35 or Table 3.36.

In cases where a tank for higher density is to be tested with fresh water or sea water, the testing pressure height is to be specially considered.

All external surfaces of the tested space are to be examined for structural distortion, bulging and buckling, other related damage and leaks.

4.4.2 Hydropneumatic test

Hydropneumatic tests, where approved, are to be such that the test condition, in conjunction with the approved liquid level and supplemental air pressure, will simulate the actual loading as far as practicable. The requirements and recommendations for tank air tests in 4.4.4 will also apply to hydropneumatic tests.

All external surfaces of the tested space are to be examined for structural distortion, bulging and buckling, other related damage and leaks.

4.4.3 Hose test

Hose tests are to be carried out with the pressure in the hose nozzle maintained at least at $2 \cdot 10^5$ Pa during the test. The nozzle is to have a minimum inside diameter of 12 mm and be at a perpendicular distance from the joint not exceeding 1.5 m. The water jet is to impinge directly upon the weld.

Where a hose test is not practical because of possible damage to machinery, electrical equipment insulation or outfitting items, it may be replaced by a careful visual examination of welded connections, supported where necessary by means such as a dye penetrant test or ultrasonic leak test or the equivalent.

4.4.4 Tank air test

All boundary welds, erection joints and penetrations, including pipe connections, are to be examined in accordance with approved procedure and under a stabilized pressure differential above atmospheric pressure not less than $0.15 \cdot 10^5$ Pa, with a leak indicating solution such as soapy water/detergent or a proprietary brand applied.

A U-tube with a height sufficient to hold a head of water corresponding to the required test pressure is to be arranged. The cross sectional area of the U-tube is not to be less than that of the pipe supplying air to the tank. Instead of using a U-tube, two calibrated pressure gauges may be acceptable to verify required test pressure.

A double inspection is to be made of tested welds. The first is to be immediately upon applying the leak indication solution; the second is to be after approximately four or five minutes in order to detect those smaller leaks which may take time to appear.

4.4.5 Compressed air fillet weld test

In this air test, compressed air is injected from one end of a fillet welded joint and the pressure verified at the other end of the joint by a pressure gauge. Pressure gauges are to be arranged so that an air pressure of at least $0.15 \cdot 10^5$ Pa can be verified at each end of all passages within the portion being tested.

Note: Where a leak test is required for fabrication involving partial penetration welds, a compressed air test is also to be applied in the same manner as to fillet weld where the root face is large, i.e., 6-8 mm.

4.4.6 Vacuum box test

A box (vacuum testing box) with air connections, gauges and an inspection window is placed over the joint with a leak indicating solution applied to the weld cap vicinity. The air within the box is removed by an ejector to create a vacuum of $0.20 \cdot 10^5$ – $0.26 \cdot 10^5$ Pa inside the box.

4.4.7 Ultrasonic test

An ultrasonic echo transmitter is to be arranged inside of a compartment and a receiver is to be arranged on the outside. The watertight/weathertight boundaries of the compartment are scanned with the receiver in order to detect an ultrasonic leak indication. A location where sound is detectable by the receiver indicates a leakage in the sealing of the compartment.

4.4.8 Penetration test

A test of butt welds or other weld joints uses the application of a low surface tension liquid at one side of a compartment boundary or structural arrangement. If no liquid is detected on the opposite sides of the boundary after the expiration of a defined period of time, this indicates tightness of the boundaries. In certain cases, a developer solution may be painted or sprayed on the other side of the weld to aid leak detection

4.4.9 Other test

Other methods of testing may be considered by **TL** upon submission of full particulars prior to the commencement of testing.

4.5 Application of coating

4.5.1 Final coating

For butt joints welded by an automatic process, the final coating may be applied any time before the completion of a leak test of spaces bounded by the joints, provided that the welds have been carefully inspected visually to the satisfaction of the Surveyor.

Surveyors reserve the right to require a leak test prior to the application of final coating over automatic erection butt welds.

For all other joints, the final coating is to be applied after the completion of the leak test of the joint. See also Table 3.37.

4.5.2 Temporary coating

Any temporary coating which may conceal defects or leaks is to be applied at the time as specified for the final coating (see item 4.5.1). This requirement does not apply to shop primer.

4.6 Safe access to joints

For leak tests, safe access to all joints under examination is to be provided. See also Table 3.37.

4.7 Hydrostatic or hydropneumatic tightness test

In cases where the hydrostatic or hydropneumatic tests are applied instead of a specific leak test, examined boundaries must be dew-free, otherwise small leaks are not visible.

Table 3.35 Test Requirements for Tanks and Boundaries

Item number	Tank or boundary to be tested	Test type	Test head or pressure	Remarks
1	Double bottom tanks **(4)**	Leak and Structural **(1)**	The greater of - top of the overflow, - to 2.4m above top of tank **(2)**, or - to bulkhead deck	
2	Double bottom voids **(5)**	Leak	See 4.4.4 through 4.4.6, as applicable	Including pump room double bottom and bunker tank protection double hull required by MARPOL Annex I
3	Double side tanks	Leak and Structural **(1)**	The greater of - top of the overflow, - to 2.4m above top of tank **(2)**, or - to bulkhead deck	
4	Double side voids	Leak	See 4.4.4 through 4.4.6, as applicable	
5	Deep tanks other than those listed elsewhere in this table	Leak and Structural **(1)**	The greater of - top of the overflow, or - to 2.4m above top of tank **(2)**	
6	Cargo oil tanks	Leak and Structural **(1)**	The greater of - top of the overflow, - to 2.4m above top of tank **(2)**, or - to top of tank **(2)** plus setting of any pressure relief valve	
7	Ballast hold of bulk carriers	Leak and Structural **(1)**	Top of cargo hatch coaming	
8	Peak tanks	Leak and Structural **(1)**	The greater of - top of the overflow, or - to 2.4m above top of tank **(2)**	After peak to be tested after installation of stern tube
9	1. Fore peak spaces with equipment	Leak	See 4.4.3 through 4.4.6, as applicable	
	2. Fore peak voids	Leak and structural **(1), (9)**	To bulkhead deck	
	3. Aft peak spaces with equipment	Leak	See 4.4.3 through 4.4.6, as applicable	
	4. Aft peak voids	Leak	See 4.4.4 through 4.4.6, as applicable	After peak to be tested after installation of stern tube
10	Cofferdams	Leak	See 4.4.4 through 4.4.6, as applicable	

11	1. Watertight bulkheads	Leak **(8)**	See 4.4.3 through 4.4.6, as applicable **(7)**	
	2. Superstructure end bulkheads	Leak	See 4.4.3 through 4.4.6, as applicable	
12	Watertight doors below freeboard or bulkhead deck	Leak **(6)**, **(7)**	See 4.4.3 through 4.4.6, as applicable	
13	Double plate rudder blades	Leak	See 4.4.4 through 4.4.6, as applicable	
14	Shaft tunnels clear of deep tanks	Leak **(3)**	See 4.4.3 through 4.4.6, as applicable	
15	Shell doors	Leak **(3)**	See 4.4.3 through 4.4.6, as applicable	
16	Weathertight hatch covers and closing appliances	Leak **(3)**, **(7)**	See 4.4.3 through 4.4.6, as applicable	Hatch covers closed by tarpaulins and battens excluded
17	Dual purpose tanks/dry cargo hatch covers	Leak **(3)**, **(7)**	See 4.4.3 through 4.4.6, as applicable	In addition to structural test in item 6 or 7
18	Chain lockers	Leak and Structural **(1)**	Top of chain pipe	
19	Lubricating oil sump. tanks and other similar tanks/spaces under main engines	Leak	See 4.4.3 through 4.4.6, as applicable	
20	Ballast ducts	Leak and Structural **(1)**	The greater of - ballast pump maximum pressure, or - setting of any pressure relief valve	
21	Fuel Oil Tanks	Leak and Structural **(1)**	The greater of - top of the overflow, - to 2.4m above top of tank **(2)**, or - to top of tank **(2)** plus setting of any pressure relief valve, or - to bulkhead deck	

Notes:

(1) *Refer to item 4.2.2.*

(2) *The top of a tank is the deck forming the top of the tank, excluding any hatchways.*

(3) *Hose Test may also be considered as a medium of the test. See 3.2.*

(4) *Including tanks arranged in accordance with the provisions of SOLAS regulation II-1/9.4.*

(5) *Including duct keels and dry compartments arranged in accordance with the provisions of SOLAS regulation II-1/11.2 and II-1/9.4 respectively, and/or oil fuel tank protection and pump room bottom protection arranged in accordance with the provisions of MARPOL Annex I, Chapter 3, Part A regulation 12A and Chapter 4, Part A, regulation 22 respectively.*

(6) *Where water tightness of a watertight door has not been confirmed by prototype test, testing by filling watertight spaces with water is to be carried out. See SOLAS regulation II-1/16.2 and MSC.1/Circular.1464.*

(7) *As an alternative to the hose testing, other testing methods listed in 4.4.7 through 4.4.9 may be applicable subject to adequacy of such testing methods being verified. See SOLAS regulation II-1/11.1. For watertight bulkheads (item 11.1) alternatives to the hose testing may only be used where a hose test is not practicable.*

(8) *A "Leak and structural test", see 4.2.2 is to be carried out for a representative cargo hold if intended for in-port ballasting. The filling level requirement for testing cargo holds intended for in-port ballasting is to be the maximum loading that will occur in-port as indicated in the loading manual.*

(9) *Structural test may be waived where demonstrated to be impracticable to the satisfaction of **TL**.*

Table 3.36 Additional Test Requirements for Special Service Ships/Tanks

Item number	Type of Ship/Tank	Structures to be tested	Type of Test	Test Head or Pressure	Remarks
1	Liquefied gas carriers	Integral Tanks	Leak and structural	Refer to Türk Loydu Rules Chapter 10 Liquefied Gas Carriers Section 4	
		Hull structure supporting membrane or semi-membrane tanks			
		Independent tanks type A			
		Independent tanks type B			
		Independent tanks type C		Refer to Türk Loydu Rules Chapter 10 Liquefied Gas Carriers Section 4	
2	Edible liquid tanks	Independent tanks	Leak and structural	The greater of - top of the overflow, or - to 0.9m above top of tank **(1)**	
3	Chemical carriers	Integral or independent cargo tanks	Leak and structural	The greater of - to 2.4m above top of tank **(1)**, or - to top of tank **(1)**plus setting of any pressure relief valve	Where a cargo tank is designed for the carriage of cargoes with specific gravities larger than 1.0, an appropriate additional head is to be considered

Note:

(1) *Top of tank is deck forming the top of the tank excluding any hatchways.*

Table 3.37 Application of Leak Test, Coating and Provision of Safe Access For Type of Welded Joints

Type of welded joints		Leak test	Coating (1)		Safe Access (2)	
			Before leak test	After leak test but before structural test	Leak test	Structural test
Butt	Automatic	Not required	Allowed **(3)**	N/A	Not required	Not required
	Manual or Semiautomatic **(4)**	Required	Not allowed	Allowed	Required	Not required
Fillet	Boundary including penetrations	Required	Not allowed	Allowed	Required	Not required

Note:

(1) *Coating refers to internal (tank/hold coating), where applied, and external (shell/deck) painting. It does not refer to shop primer.*

(2) *Temporary means of access for verification of the leak test.*

(3) *The condition applies provided that the welds have been carefully inspected visually to the satisfaction of the Surveyor.*

(4) *Flux Core Arc Welding (FCAW) semiautomatic butt welds need not be tested provided that careful visual inspections show continuous uniform weld profile shape, free from repairs, and the results of NDE testing show no significant defects.*

SECTION 4

DIRECT STRENGTH CALCULATIONS

A. General

1. Introduction

1.1 This document contains procedures and basics on the strength analyses of the ship structures with Finite Element Method (FEM). The aim is to prevent errors in selecting methods, in the modelling, in executing analyses, in evaluating results and to provide feasible engineering judgment (approach).

1.2 For The strength calculations of ship structures with using FEM, below topics are described in more detail in the following sections:

- Determination of the objective, type and extent of the analysis,
- Building up the concurrent engineering approach or model,
- Modelling of the structure,
- Determination of loads and boundary conditions compatible with the type and the objective of the analysis,
- Execution of the analysis,
- Evaluation and assessment of results.

1.3 Depending on the type and objective of the analysis, certain simplifications are possible on loads and boundary conditions in the finite element analysis. Needed information about the simplifications can be obtained from the specialist literature and the descriptions of the commercial FEM software products. If the planned simplifications are not sourced from literature or from the descriptions of commercial software; should be discussed with **TL**. The simplifications should be in convenience with the engineering nature of the analyzed situation. The content and details of the simplifications should be explained in the analysis document.

1.4 The type and extent of the analysis depends primarily on the kind of the structural response to be assessed. In general, the following structural responses are investigated foremost in strength analyses:

- Deformations and stresses for specified load conditions,
- Failure behaviour of the structure and magnitude of the ultimate load that causes failure,
- Dynamic and vibrational responses of the analyzed structure.

1.5 Beyond these standard loading and boundary conditions, some special cases should be investigated (e.g. for example temperature loads in case of ships with hot or cold cargoes.); for loads varying with time, the vibration behaviour of the structure must be taken into account.)

1.6 It should be noted that when the structural response of the ship structure is investigated, linear or/and non-linear effects; should be taken into account according to type of analysis and nature of the engineering case. Non-linear effects should be taken into account in the following cases:

- For an analysis of the failure behaviour of the structure,
- Geometric Non-linearity: for relatively flexible structures with large deformations,
- Local failure behaviour of structural members or components e.g. buckling of plate panels,
- Material Non – linearity: if a plasticisation of structural areas is considered.

1.7 The evaluation of the deformation and stress results can usually be subdivided into the following categories depending on the structural conditions:

- Global deformations and stresses of the hull girder and primary structural components,
- Local deformations and stresses of the primary and secondary structural components,
- Locally increased stresses at structural details and discontinuities.

The objective of the analyses, loading and boundary conditions, extent of modelling and the evaluation depend on one of these categories.

2. Definition of the Aim, Type and Scope of the Analysis

2.1 The aim, type and scope of the strength analysis using Finite element Method should be determined. Because, the extent of the model, boundary conditions, type of elements and loads depend on these reasons.

2.2 The objective of the analysis becomes definite with the establishment of the conditions in A.1.4.

2.3 The type of the analysis becomes definite with the establishment of the conditions in A.1.6.

2.4 The scope of the analysis is related to the extent of the finite element model and the mesh density of the model (Defined in B.1.3).

3. Global Deformations and Stresses

3.1 The global deformations and stresses are the structural responses of hull girder and primary structural components caused by the normal, shear, bending and torsional loads that act on the whole structure.

3.2 The primary structural components consist of floors, bottom girders, side and deck transverses, stringers, transverse and longitudinal bulkheads, transverse and longitudinal deck strips, deck girders and comparable components, each including the effective part of the plating and stiffeners.

3.3 Effective plate widths should be taken into account in the computation of the global deformations and stresses.

3.4 Global stresses are the nominal stresses that caused by the shear forces and bending moments that depend on the cross – section properties. These stresses include effective widths but not locally increased stresses. Locally increased stresses should be investigated detailed later.

4. Local Deformations and Stresses

4.1 Additionally to global deformations and stresses; secondary structural components like stiffeners and plates, should be analysed individually under local loads that causes local deformations and stresses.

4.2 In the local analyses, secondary structural components that include frames, stiffeners, beams and their plating must be modelled with bending, torsional and shear stiffeners as well as supporting and tripping brackets.

4.3 The effective width effects should be taken into account in the analyses.

4.4 The local deformations and stresses should be superimposed to global deformations and stresses respectively.

5. Local Discontinuous and Increased Stresses

5.1 At geometrical discontinuous areas and structural details, there may be locally increased stresses that cause fatigue. For this reason, these areas should be investigated in fatigue manner. The three types of locally increased stresses are listed below:

- Maximum stress in notch root;
- Structural or hot spot stress, defined additionally for welded joints;
- Special parameters for assessing the stress at crack tips;

5.2 The maximum stress in the notch root, e.g. of the rounded edges of cut-outs, can occur at the structural details or discontinuous structural areas. Under these conditions, the elastic limit of the material may be exceeded with realistic load conditions. For this reason, a limit should be determined that beyond the elastic limit that is called “notch stress” σ_k. In the case of very sharp notches, local supporting effects can be applied depending on enlarged radius of notch radius.

5.3 In the complex welded structures the stress can increase as a result of the structural geometry that caused by weld toe. This leads to the structural or "hot spot" σ_h stresses and these stresses should be assessed under assumption of material elastic behaviour.

5.4 In the assessment of Crack tips special parameters are used like stress intensity, J-Integral or crack tip opening. For detailed calculation of these parameters, the applicable literature can be used.

5.5 Except the direct calculation, detailed stress concentration factors or detailed catalogues can be used for calculating the locally increased stresses. If this way is chosen to calculate the locally increased stresses, nominal stress values should be computed with sufficient accuracy in accordance with their definition.

B. Modelling and Boundary Conditions

1. Extent of Modelling

1.1 For the structural analysis of the ship structures can be categorized in four groups:

- Global 3D FEA Model
- Partial 3D FEA Model
- Frame models
- Local models

1.2 Global 3D FEA model is used for global strength analysis to determine the structural response of primary structural members such as longitudinal members, transverse bulkheads and main supporting members of hull girder and entire hull. To get the correct structural behaviour, the loads should be applied realistically.

1.3 Global 3D FEA analyses establish the scantling requirements of plates and stiffeners and they are sufficient to estimate steel weight. Also, the "net" thickness or scantlings correspond to the minimum strength requirements of **TL** Rules.

1.4 Partial 3D FEA analyses are to verify the strength of the parts of the hull girder and its structural components. Like Global 3D models, partial analyses are used for complex behaviour of the investigated part.

1.6 Frame models are used to determine the strength behaviour of the transverses of the hull girder (figure). The investigations are made for to evaluate the in-plane bending behaviour of the transverse webs.

1.7 Local models are used for strength analysis of secondary or special components of the hull with structural details. These models are used for investigating the structural areas where relatively high stress levels were found in global 3D models. Suspected areas or details not adequately represented in Global 3D FEA model can be modelled locally. Also, foundations, the structural components under liquid loads, masts, shaft structure, propeller structures etc... should be examined with local detailed models.

2. Element Selection

2.1 The element selection for the FEA analysis of ship structures depends on the objective and the type of analysis. The characteristics of the selected element should be represented with sufficient accuracy for the stiffness of the structure and stresses to be analyzed. While performing a structural analysis, adequate knowledge for the element characteristics is a prerequisite; the program documentation and applicable literature should be consulted.

2.2 The following types of elements are used for structural analysis of ship structures.

- Truss elements (1D elements with only axial stiffness without bending stiffness),
- Beam elements (1D elements with axial, bending, shear and torsional stiffness),
- Membrane elements (Plane stress elements) (2D elements with membrane stiffness in plane without bending stiffness about the axis lying in the plane),

- Shell elements (2D elements with in-plane stiffness, bending and torsional stiffness),

- Solid elements (3D elements),

- Boundary and spring elements.

While using different element types together, special attention should be paid for the compatibility of the displacement functions as well as the transferability of the boundary loads and stresses.

2.3 The selected element for the analysis should be reflecting the deformations and stresses for the load cases or the eigen values to be analyzed or reflect the failure behaviour when determining the magnitude of the ultimate load.

2.4 In cases of pure bending behaviour in accordance with beam or plate theory- especially plate panels, stiffeners, web frames, decks, superstructures as well as entire hull girder- beam and shell elements are suitable. In the situations that bending behaviour of membrane elements in their plane or solid elements to be permitted; plane stress elements or solid elements can be used with higher-order displacement functions (with additional mid-side nodes) or a finer mesh may have to be chosen.

2.5 3D models of the hull girder or of individual primary structural components can be modelled with membrane elements if only global deformations and stresses are to be determined. In this situation only the membrane stiffness of the modelled structures is taken into account. In addition, the relevant parts of the secondary components must be considered in the model. Also, the longitudinal stiffeners should be taken into account with using beam elements.

2.6 In local models, all structural stiffness components should be taken into account. For this type of model, shell or solid elements are suitable to reflect the real physical behaviour. If the plane structures of investigated area are loaded within in their plane, membrane (plane stress elements) can be used for modelling.

3. Mesh Density

3.1 The selection of mesh density strongly depends on the conditions of the stiffness, types of analysis and failure behaviour (if investigated) of material. Also, the characteristics of the selected element should reflect the real physical behaviour. The structure should be modelled with suitable mesh density for sufficient accuracy because of abovementioned reasons.

3.2 The selection of element type and mesh density have great influence on the calculation of the locally increased stress and ultimate load. Insufficiently mesh density, frequently leads to a considerable underestimation of local stresses and overestimation of the ultimate load.

3.3 The geometry of the structure and the positions of the loads or supports must be taken into account while determining the mesh density.

3.4 For Global 3D FEA and partial 3D FEA, models can be meshed very coarsely. The spacing of the primary structural components can be used as element dimensions. This approximation is adequate for reflecting the bending behaviour of the primary structural components with sufficient accuracy by the suitable element types is used. During modelling process, the reduced effective widths should be considered. The same applies for grillages and local strength analyses of stiffeners if the width of the elements in the plating corresponds to half or whole stiffener spacing.

3.5 Generally, the aspect ratio of the elements should not be greater than 3:1.

3.6 To calculate locally increased stresses, the mesh density must be increased gradually in accordance with the stress gradient.

4. Approximations

4.1 Due to complexity of the ship structures, some simplifications are necessary in modelling especially for Global 3D model. These simplifications are allowable as long as the results are only impaired to a negligible extent.

4.2 A common simplification for global or partial 3D FEA models carries on combining some several secondary components into primary structural components. The combined components should lie at the geometrical centre of affected components if possible and should reflect the equivalent stiffness.

4.3 Small secondary components which are considered that they cannot affect the stiffness in global manner may be neglected in Global 3D FEA model (brackets at frames, buckling stiffeners…)

4.4 Large openings that directly affect the structural stiffness must be modelled. The thickness reduction and element deletion is not recommended because these approximations directly cause unrealistic stress distribution.

4.5 The plate thickness and the scantlings of the profiles should be taken into account as designed.

5. Boundary Conditions

5.1 In all types of models, the boundary conditions should reflect the physical behaviour. For this reason, the boundary conditions should prevent rigid body motions and reflect the interaction between adjacent structural areas at the model edges.

5.2 For global 3D models, in stress analysis of ship structures (still water, hogging and sagging conditions), to apply a realistic boundary condition; the load equilibrium should be provided. The main structural components and masses that have directly influence on stiffness behaviour should be included. The corresponding load pattern against this situation must be applied. However the load equilibrium is provided, because of the nature of Finite Element Method, a boundary condition must be applied. Its place can be the exact or a closer point to the neutral axis on the mid-ship section with all degrees of freedom. So that, physical response of ship in nature; can be achieved with this approximation.

5.3 In nature (still water, hogging and sagging conditions), the hull girder is subjected bending and torsional moments and shear forces at any section of the ship. At the two ends of the ship, there are no either bending moment or shear forces. In partial 3D models, the boundary effects from absent part of the model should be transferred as bending moments and shear forces – or normal and shear stresses- to the end of the partial 3D model. Although the loads are in equilibrium, the finite element model still needs some support in order to provide static stability. These supports should be effect the vertical, horizontal, bending moment distribution and model responses at minimum or negligible level.

5.4 If the loading pattern and construction of the structure allow, the symmetry boundary conditions can be used for partial 3D and local models.

5.5 While applying boundary conditions, it should be avoided that non-existing degrees of freedom are created or existing degrees of freedom are ignored at the boundaries.

6. Data Verification

6.1 All the FEA models of the ship structures should satisfy certain requirements and the input data should be checked for the errors.

6.2 The data checks can be made with computer codes and visualization programs.

6.3 The following subjects should be checked:

– Material properties,

– Plate thicknesses / cross section properties,

– Beam orientations,

– Element properties,

- Aspect ratio
- Free edges
- Warping
- Shapes
- Overlapping
- Coincidence of nodes and elements

– Mesh density and mesh transitions,

– Loads and boundary conditions,

– Unit compatibility,

– Solution options.

C. Loading Approximations

1. General

1.1 For the strength analyses of the ship structures, the loads can be classified as below:

- Hydrostatic pressure of sea water (still water, wave crest and wave through) acting on whole ship,

- Hydrodynamic loads (wave - induced) acting on hull girder,

- Hydrostatic pressure loads of cargo and ballast tanks acting on the ballast and tank structures,

- Motion – induced dynamic cargo and ballast loads on the cargo and ballast structure,

- Loads from ship's operation e.g. due to action of rudders, shafts, engines, and wind loads, ice loads,

- Load from unusual situations e.g. grounding, collision.

1.2 In load case selection, the balance of forces and moments should be provided or clearly defined; sensible section/reaction forces and deformations are acquired at boundaries or supports.

1.3 If the load case acts on the structure in nonlinear manner; linear superposition should not be applied for this situation. Also, the contact circumstances of the structures should be taken into account in nonlinear manner.

2. Deterministic Procedures

2.1 In the decision of strength of structural parts under analysis, deterministic load situations are adequate for assessment. These load cases are insufficient to describe the real nature of the loads; however they are physically meaningful approaches.

2.2 The load cases can be acquired with two approaches:

- The load components using Section 5,

- Direct computation of loads.

2.3 Deterministic load cases are listed below:

- Waves from ahead and wave from astern,

- Oblique waves from astern and ahead,

- Oblique waves from astern and ahead (when ship is heeling).

2.4 The cargo and ballast loads and conditions should be taken into account for each corresponding load case.

2.5 Load cases for container ships with a length L of 150 m and greater are to be determined according to Additional Rule for Longitudinal Strength Assessment of Container Ships, F

3. Non-Deterministic Procedures

3.1 The wave induced loads and motions can be computed with two possible ways:

- Frequency domain analysis and evaluation with the aid of spectral method,

- Time domain analysis.

3.2 The natural seaways are usually characterized by the energy spectra. The use of suitable spectrum should be discussed with **TL**. The results must be assessed statically, whilst considering the frequency of occurrence of the seaways, cargo distributions, ship courses and speed.

3.3 The hydrodynamic loads and the ship motions should be calculated as realistically as possible by considering all influencing parameters.

3.4 In frequency domain analysis, the first action is to determine the structural response to harmonic elementary waves in the form of transfer functions for each case of particular cargo distribution, ship speed and heading relative to wave direction. At this point, a sufficient number of wave frequencies must be taken in order to consider the resonance peaks of the structural response with sufficient accuracy. For a specified natural seaway, the spectrum of the structural response is obtained from the transfer function and the wave spectrum.

3.5 In time domain analysis, the loading process should be generated in a suitable manner from the characteristic data of the wave spectrum. The time domain analysis of the structural response must be selected large enough, so that the subsequent statistical evaluation can be performed with sufficient accuracy with respect to the expected values.

4. Modelling of Loads

4.1 The loads should be applied to the model realistically. If necessary, the finite element modelling of the structure should be adopted to the modelling of loads.

4.2 Distributed loads can be converted into nodal forces or moments considering the displacement functions of elements.

4.3 For Global 3D models, still water, the wave crest and wave trough load situations should be applied as external pressure to the hull surface. The position of the crest and trough can be arranged possibly varied.

4.4 For partial 3D models, the loads should be applied as bending moments and shear forces at the model boundaries that are computed from Section 6 for corresponding section for corresponding case.

4.5 Another way to apply loads to partial 3D models is to use Global 3D model results. The investigated boundary deformations of the global 3D model can be applied to the corresponding partial 3D model boundaries. The deformation values of Global 3D model must be interpolated for the intermediate nodes (boundary nodes for partial 3D model).

4.6 For local 3D models, if the effects of the global load cases are investigated; 4.5 can be applied with the same way. If a local load situation is investigated; with appropriate boundary condition, the local load(s) can be applied as nature.

5. Load Input Check

5.1 The input for load data must be checked against possible errors. For this purpose, the special computer codes or visualization programs can be used.

5.2 The reaction forces and moments should be checked. For balanced load cases, reaction forces and moments are negligible.

5.3 The magnitude of total mass and center of mass of the structure can be checked.

5.4 All the checks should be documented.

D. Evaluation of Results

1. Reasonableness of Results

1.1 During the evaluation process, the plausibility of the results must be examined. This can be made with visualization of results and checking of deformations to see whether their magnitudes lie within expected range and whether their distributions are meaningful with respect to the loads and boundary conditions.

1.2 Also, the reaction forces and moments should be checked whether their magnitudes are in expected range or can be neglected.

1.3 In the partial 3D models that is taken from global 3D model or the local model that is taken from partial or global model; the stresses neat the boundaries should be checked for the two models.

1.4 For the non – linear computations, the check should be made that the solution was determined with sufficient accuracy in the non-linear zone.

2. Deformation Results

2.1 The deformation results should be plotted generally for other people understanding. For every component of displacement should be plotted for each axis.

2.2 For strength analysis of ship structures, excessively large deformations are being avoided that exceeds the material load carrying capacity or strain limits.

2.3 The deformation results should be plausible for engineering judgment.

3. Stress Results

3.1 For specified load cases, generally the stress results are evaluated.

3.2 The stress results must be checked with respect to permissible values as defined in the **TL** Rules. The stress results are categorized in A.1.7.

3.3 The stress evaluation should be made for each type of analysis for their own purpose. For example in Global 3D FEA or partial 3D FEA analysis, the results should be evaluated in global manner. Also, all the simplifications should be taken into account.

3.4 Local stresses at structural details and discontinuities must be included in the assessment.

3.5 For material induced non – linear analysis, the elastic – plastic stress results – if exists – should be assessed.

4. Buckling Strength

4.1 In general, the safety with respect to the ultimate load must be assessed and found adequate. If in accordance with A.1.4. the magnitude of the ultimate load or the corresponding eigenvalues are calculated directly within the extent of the strength analysis, these structural responses can be used directly for the assessment. However, if the stresses and deformations were calculated for specified load conditions, an adequate safety against buckling or the effects of an associated load transfer must be taken into account. The latter can generally only be assumed for redundant systems, e. g. For stiffened plate panels for which the stiffeners can take over part of the loads of the plates subject to buckling. The following paragraphs refer to the buckling assessment within the scope of calculation of stresses and deformations for specified load conditions.

4.2 The safety with respect to buckling failure must be determined by considering all calculated stress components in the member area under assessment, on the basis of the assumptions given in the Section 3.C. In the buckling analysis of stiffeners, the effective width of the associated plating must be taken into account.

4.3 The effect of the load transfer in the post buckling regime for plate panels can be estimated approximately with the assumptions given in the Section 3.C concerning effective width. The increased stress in the edge area of the plate or in the stiffeners must not exceed the relevant permissible values.

4.4 To improve the clarity, it is advisable to perform the assessment with the aid of tabulated usage factors, which are obtained from the ratio of the actual and the permissible stress or load.

5. Fatigue Strength

5.1 Fatigue strength aspects should generally be taken into account in the assessment of ship structures, owing to the cyclic stresses that are usually present. In strength analyses for specified load conditions, a simplified assessment can be performed if the load cases according to C.2. are chosen such that the maximum stress ranges are approximately attained in the components under consideration. Then further assumptions can be made on the stress spectra

and for assessment on the basis of the parameters prescribed by the **TL** Rule, Hull.

5.2 In the assessment of the stresses with regard to fatigue strength, the stress type must be considered, i.e. whether nominal stresses or locally increased notch or structural stresses are calculated with the chosen model; see also A.1.7.

5.3 For the assessment, it is recommended that usage factors be applied; these are obtained from the ratio of the maximum actual stress range to the permissible stress range for an equivalent stress spectrum of the same shape and number of load cycles.

6. Presentation of Results

6.1 All the analysis input data; assumptions and results must be documented clearly and completely.

6.2 The results should be shown with graphical plots and table of lists.

6.3 The units that are used in the analysis should be compatible with **TL** Rules for Hull.

SECTION 5

DESIGN LOADS

A. Introduction

1. General

1.1 This section provides the design loads for the scantling calculations. The design loads cover the following load situations:

- **Local still water (static) loads;** including hydrostatic sea pressure loads, internal static pressure loads due to cargo and ballast and static forces due to weights carried in ship spaces and on decks.

- **Local wave loads;** including external wave pressure loads, inertial pressure loads and forces due to the ship accelerations applied to the weights carried in the ship spaces.

- **Local dynamic loads;** including impact loads and slamming loads.

2. Definitions

2.1 Coordinate System

2.1.1 The ship's geometry, motions, accelerations and loads are defined with respect to the following right-handed coordinate system as shown in Figure 5.1:

– Origin: at the intersection of the longitudinal plane of symmetry of ship, the aft end of L and the baseline,

– X axis: longitudinal axis, positive forwards,

– Y axis: transverse axis, positive towards portside,

– Z axis: vertical axis, positive upwards.

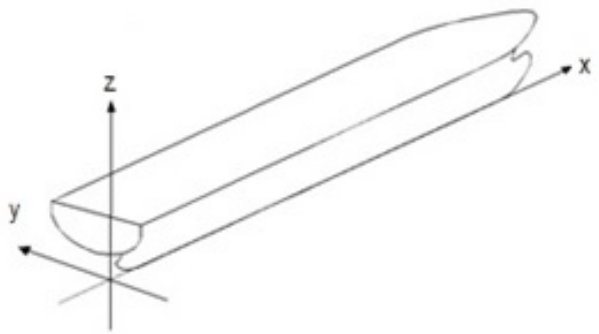

Figure 5.1 Reference coordinate system

2.1.2 The direction of the incident waves are specified by the angle β between the x-axis and the propagating wave direction as shown in Figure 5.2:

- Head sea is waves propagating in the negative x-direction,

- Beam sea is waves propagating in the positive or negative y-direction,

- Following sea is waves propagating in positive x-direction,

- Oblique sea is waves propagating in a direction between head and beam sea (or following and beam sea), and

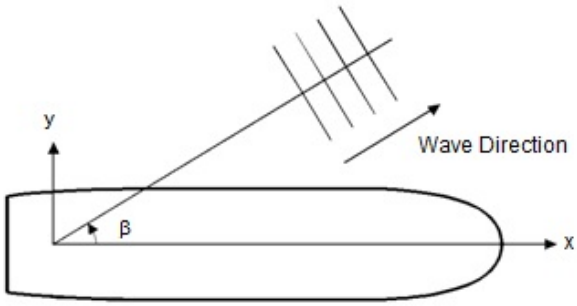

Figure 5.2 Definition of wave heading

2.2 Sign Conventions

2.2.1 Positive motions, as shown in Figure 5.3, are defined as:

– Positive surge is translation along the positive x-axis (forward)

– Positive sway is translation along positive y-axis (towards port side of vessel)

– Positive heave is translation along positive z-axis (upwards)

– Positive roll is starboard down and port side up

– Positive pitch is bow down and stern up

– Positive yaw is bow rotating towards portside of vessel and stern towards starboard side.

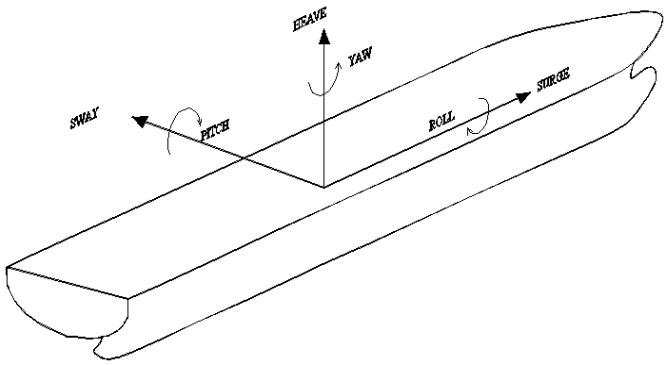

Figure 5.3 Definition of positive motions

2.2.2 Positive accelerations are defined as:

– Positive longitudinal acceleration is acceleration along positive x-axis (forward)

– Positive transverse acceleration is acceleration along positive y-axis (towards port side of vessel)

– Positive vertical acceleration is acceleration along positive z-axis (upwards)

2.3 Definition of symbols

a_0 = Acceleration parameter,

a_L = Longitudinal acceleration due to the combined effect of surge and pitch [m/s^2],

a_{PZ} = Vertical acceleration due to pitch [m/s^2],

a_{PX} = Longitudinal acceleration due to pitch [m/s^2],

a_{RY} = Transverse acceleration due to roll [m/s^2],

a_{SW} = Sway acceleration [m/s^2],

a_T = Transverse acceleration due to the combined effect of sway and roll [m/s^2],

a_V = Vertical acceleration due to the combined effect of heave and pitch [m/s^2],

a_X = Surge acceleration [m/s^2],

a_Z = Heave acceleration [m/s^2],

b = Upper breadth of tank [m],

B = Breadth of ship [m], as defined in Section 1, H.2,

C_B = Moulded block coefficient, as defined in Section 1, H.4, not to be taken less than 0.6,

C_L = Length coefficient,

$= \sqrt{\frac{L}{90}}$ for L < 90 m

= 1.0 for L ≥ 90 m

C_{RS} = Service range coefficient,

= 1.00 for unlimited service range

= 0.90 for restricted service area Y

= 0.75 for restricted service area K50

= 0.66 for restricted service area K20

= 0.60 for restricted service area L1 and L2

C_S = Longitudinal pressure distribution coefficient,

C_{SL} = Distribution factor for slamming pressure,

C_W = Wave coefficient,

$= 0.0857\ LC_{RS}$ for L< 90 m

$= \left[10.75 - \left(\frac{300 - L}{100}\right)^{1,5}\right] C_{RS}$ for 90≤ L ≤300 m

$= 10.75\ C_{RS}$ for 350 m >L > 300 m

$= \left[10.75 - \left(\frac{L - 350}{150}\right)^{1,5}\right] C_{RS}$ for 350≤ L ≤500 m

H = Depth of ship [m], as defined in Section 1, H.2,

f_P = Coefficient corresponding to the probability level, taken equal to:

= 1.0 for strength assessments corresponding to the probability level of 10^{-8}

= 0.5 for strength assessments corresponding to the probability level of 10^{-4}

F_D = Dynamic load due to single forces [kN],

F_S = Static force due to units of cargo [kN],

g = Acceleration due to gravity [9.81 m/s^2],

GM = Metacentric height [m],

h_1 = Vertical distance of load centre from highest point of tank [m],

h_2 = Distance of load centre from top of overflow or from a point 2,5 m above tank top, whichever is the greater [m],

h_{air} = Height of air pipe or overflow pipe [m],

h_c = Height of cargo loading for exposed decks and hatch covers, or mean tween deck height for sheltered decks [m],

h_F = Vertical distance from the load point to the deepest equilibrium waterline in damaged condition or to freeboard deck if the damage waterline is not given [m],

H = Heave amplitude [m],

k = Material factor, as defined in Section 3, A,

k_r = Roll radius of gyration [m],

L = Length of ship [m], as defined in Section 1, H.2,

M_C = Weight of cargo in the hold [t],

P_{DA} = Dynamic deck load in accommodation and service spaces [kN/m^2],

P_{DB} = Dynamic pressure load due to bulk cargo [kN/m^2],

P_{DC} = Dynamic load on cargo decks [kN/m^2],

P_{DE} = Wave load on exposed decks [kN/m^2],

P_{DI} = Dynamic cargo pressure load on inner bottom [kN/m^2],

P_{DM} = Dynamic deck load in machinery spaces [kN/m^2],

P_{DT} = Dynamic tank pressure load [kN/m^2],

P_{IB} = Bow impact load [kN/m^2],

P_{IS} = Stern impact load [kN/m^2],

P_S = Static sea pressure load [kN/m^2],

P_{SA} = Static deck load in accommodation and service spaces [kN/m^2],

P_{SB} = Static cargo load due to bulk cargoes [kN/m^2],

P_{SC} = Static load on cargo decks [kN/m^2],

P_{SD} = Static pressure load on deck [kN/m^2],

P_{SI} = Static cargo load on inner bottom [kN/m^2],

P_{SL} = Bottom slamming load in the forebody [kN/m^2],

P_{SM} = Static deck load in machinery spaces [kN/m^2],

P_{ST} = Static tank pressure load [kN/m^2],

P_T = Design tank pressure load [kN/m^2],

P_{WB} = Wave load on bottom [kN/m^2],

P_{WD} = Wave load on weather deck [kN/m^2],

P_{WS} = Wave load on side shell [kN/m^2],

p_V = Setting of pressure relief valve [kN/m^2],

R_R = Distance [m] from the centre of mass to the roll axis of rotation,

S_A = Relative motion amplitude [m],

T = Draught of ship [m], as defined in Section 1, H.2,

T_{BFP} = Smallest design ballast draught defined at forward perpendicular for normal ballast conditions [m],

T_H = Heave period [s],

T_P = Pitch period [s],

T_R = Roll period [s],

V = Ship's speed [knots] according to Section 1, H.5,

V_H = Volume of the hold [m^3],

x = Distance from aft end of length L [m],

x_1 = Distance of structural element from the tank's ends in the ship's longitudinal direction [m],

y = Horizontal distance between load centre and centreline [m],

y_1 = Distance of structural element from the tank's sides in the ship's transverse direction [m],

z = Vertical distance of the structure's load centre above base line [m],

z_R = Height of roll axis of rotation above the baseline [m],

z_{TOP} = z coordinate of the top of tank [m],

α = Flare angle at the load centre [deg],

β = Wave heading,

γ = Angle of repose of the cargo [deg],

φ = Pitch amplitude [rad],

ℓ_T = Distance [m] between transverse bulkheads or effective transverse wash bulkheads,

ρ_C = Density of cargo as stowed [t/m^3],

ρ_{SW} = Density of sea water [1.025 t/m^3],

ρ_L = Density of liquids [t/m^3],

θ = Roll amplitude [rad].

2.4 Load centre

The load centre for which the design pressure shall be calculated is defined as follows:

2.4.1 For plates:

– **Vertical stiffening system:**
Half of the stiffener spacing above the lower support of plate field, or lower edge of plate when the thickness changes within the plate field

– **Horizontal stiffening system:**
Midpoint of plate field

2.4.2 For stiffeners and girders:

– Midpoint of span

B. Accelerations

1. General

1.1 Accelerations in the ship's vertical, transverse and longitudinal axes are in general obtained by assuming the corresponding linear acceleration and relevant components of angular accelerations as independent variables. The acceleration components take account of the following components of motion:

- Vertical acceleration (vertical to the base line) due to heave and pitch.

- Transverse acceleration (vertical to the ship's side) due to sway, yaw and roll including gravity component of roll.

- Longitudinal acceleration (in longitudinal direction) due to surge and pitch including gravity component of pitch.

1.2 As an alternative to the formulae in this Section, **TL** may accept the values of ship motions and accelerations derived from direct calculations, when justified on the basis of the ship's characteristics and intended service. In general, the values of ship motions

and accelerations to be calculated are those which can be reached with a probability of 10^{-5} per cycle. In any case, the calculations, including the assumed sea scatter diagrams and spectra, are to be submitted to **TL** for approval.

1.3 The following formulae may be taken for guidance when calculating the acceleration components owing to the ship's motions. For calculation purposes they are considered to act separately.

2. Vertical Acceleration

2.1 The acceleration in the ship's vertical axis is given as the combined effect of heave and pitch as follows:

$$a_V = \sqrt{a_Z^2 + a_{PZ}^2} \qquad [m/s^2]$$

where the vertical acceleration due to heave is given by:

$$a_Z = a_0 g \qquad [m/s^2]$$

a_0 = Acceleration parameter to be taken equal to:

$$= f_P\left(3C_L \frac{C_W}{L} + 0.2\frac{V}{\sqrt{L}}\right)$$

Vertical acceleration due to pitch is given by:

$$a_{PZ} = \phi\left(\frac{2\pi}{T_P}\right)^2 \left|\left(x - 0.45L\right)\right| \qquad [m/s^2]$$

The single pitch amplitude is given by:

$$\phi = 2.75C_B \frac{C_W}{L} \qquad [rad]$$

The pitch period, T_P, is given by:

$$T_P = 1{,}8\sqrt{\frac{L}{g}} \qquad [s]$$

3. Transverse Acceleration

3.1 The reference value of transverse accelerations at any point is given as follows:

$$a_T = \sqrt{a_{SW}^2 + \left(g\theta + a_{RY}\right)^2} \qquad [m/s^2]$$

Where the transverse acceleration due to sway is given by:

$$a_{SW} = 0.3a_0\ g \qquad [m/s^2]$$

a_0 = Acceleration parameter as defined in 2.1.

The roll angle (single amplitude) is given by:

$$\theta = \frac{50\left(1.25 - 0.025T_R\right)}{B + 75} \qquad [rad]$$

The period of roll is generally given by:

$$T_R = \frac{2.2k_r}{\sqrt{GM}} \qquad [s]$$

k_r = Roll radius of gyration [m],

GM = Metacentric height [m],

The values of k_r and GM to be used shall give the minimum realistic value of T_R . In case k_r and GM have not been calculated, the following approximate design values may be used:

k_r = 0.40 B

GM = 0.07 B in general

= 0.12 B for tankers and bulk carriers

B = Breadth of ship [m], as defined in Section 1, H.2.

Transverse acceleration due to roll is given by:

$$a_{RY} = \theta\left(\frac{2\pi}{T_R}\right)^2 R_R \qquad [m/s^2]$$

R_R = Distance [m] from the centre of mass to the axis of rotation. The roll axis of rotation may be taken at a height z_R m above the baseline, where

z_R = $\left[\frac{D}{4}+\frac{T}{2}\right]$ or $\left[\frac{D}{2}\right]$, whichever is less.

In case KG value is not defined, height of weather deck may be taken.

4. Longitudinal Acceleration

4.1 Acceleration along the ship's longitudinal axis is given as the combined effect of surge and pitch as follows:

$$a_L = \sqrt{a_X^2 + \left(g\sin\varphi + a_{PX}\right)^2} \qquad [m/s^2]$$

The surge acceleration is given by:

$$a_X = 0.2ga_0 \qquad [m/s^2]$$

a_0 = Acceleration parameter as defined in 2.1.

Longitudinal acceleration due to pitch is given by:

$$a_{PX} = \phi\left(\frac{2\pi}{T_P}\right)^2 \qquad [m/s^2]$$

The single pitch amplitude ϕ, and the pitch period T_P, are given in 2.1.

4.2 The pitch axis of rotation may be taken at the cross-section 0.45L from AP, z meters above the baseline.

C. Static Local Loads

1. General

The following static local loads are considered:

- Static sea pressure,
- Static tank pressure,
- Tank overpressure,
- Static deck loads.

2. Static Sea Pressure Load

2.1 The external hydrostatic pressure is to be applied proportional to the local distance to the still waterline. For normal structural assessment the minimum design ballast draught and maximum design draught (scantling draught) are used to cover the most critical situation.

The static sea pressure, P_S, is to be taken as:

$$P_S = \rho_{SW} g\left(T - z\right) \qquad [kN/m^2]$$

ρ_{SW} = Density of sea water [1.025 t/m^3],

z = Vertical coordinate of load point [m], not to be greater than T, see Figure 5.4,

T = Draught in the loading condition being considered [m],

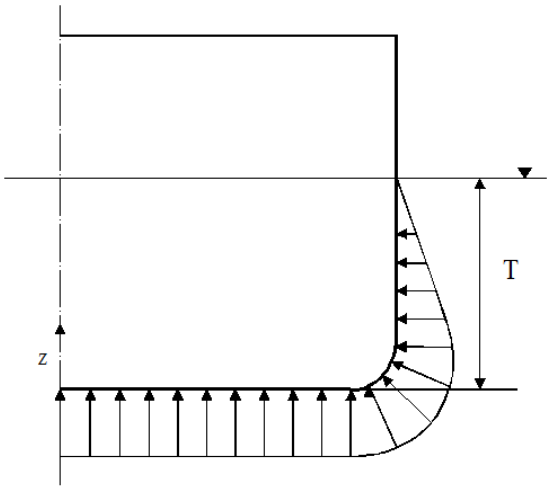

Figure 5.4 Static sea pressure distribution

3. Static Tank Pressure Load

3.1 For internal tanks, the internal tank pressure in still water is to be applied proportional to the local distance to the head of the tank with allowances for possible overpressure, such as height of air pipes.

3.2 The static tank design pressure, P_{ST}, is to be taken as the greater of the following values:

3.2.1 The static tank design pressure for service conditions:

$P_{ST} = \rho_L g h_1$ [kN/m^2]

ρ_L = Density of liquid in the tank, not to be taken less than 1.025 t/m^3

h_1 = Vertical distance of load centre from highest point of tank [m]

3.2.2 The static tank pressure in the case of overfilling or filling during flow through ballast water exchange, is to be taken as:

$P_{T2} = \rho_{SW} g h_2$ [kN/m^2]

h_2 = Distance of load centre from top of overflow or from a point 2.5 m above tank top, whichever is the greater. Tank venting pipes of cargo tanks of tankers are not to be regarded as overflow pipes.

3.2.3 The static tank testing pressure is to be taken as:

$P_{T1} = \rho_{SW} g h_1 + p_V$ [kN/m^2]

h_1 = As defined in 3.2.1.

p_V = Setting of pressure relief valve, if fitted, is not to be taken less than 25 kN/m^2.

Smaller set pressures than 25 kN/m^2 may be accepted in special cases. The actual set pressure will be entered into the class certificate.

3.2.4 The static pressure in compartments and tanks in a flooded or damaged condition is to be taken as:

$P_{T3} = \rho_{SW} g h_F$ [kN/m^2]

h_F = Vertical distance from the load point to the deepest equilibrium waterline in damaged condition obtained from applicable damaged stability calculations or to freeboard deck if the damaged waterline is not given,

= $h_1 + h_{air}$ [m]

h_{air} = Height of air pipe or overflow pipe [m], not to be taken less than 2.5 m above highest point of tank, excluding small hatchways. For tanks with tank top below the weather deck the height of air-pipe or overflow pipe is not to be taken less than 2.5 m above deck at side.

3.3 Additional calculation may be required where piping or pumping arrangements may lead to a higher pressure.

4. Static Deck Load

4.1 The static load on cargo decks and hatch covers is to be determined according to the following formula:

$P_{SC} = \rho_C g h_C$ [kN/m^2]

ρ_C = Density of cargo loading [t/m^3]

= 0.7 t/m^3 for general cargo

= 0.5 t/m^3 for timber and coke deck cargo

h_C = Height of cargo loading for exposed decks and hatch covers, or mean tween deck height for sheltered decks [m]

The static load on cargo decks and hatch covers is not to be less than 15 kN/m^2.

4.2 The static cargo load on the inner bottom is to be determined as follows:

$P_{SI} = \rho_C g h$ [kN/m^2]

ρ_C = Density of cargo [t/m^3] (not to be taken less than 0.7 t/m^3),

= $\frac{M_C}{V_H}$

M_C = Weight of cargo in the hold [t],

V_H = Volume of the hold [m³] (hatchways excluded),

h = Height of the highest point of the cargo above the inner bottom when the hold is completely filled [m].

4.3 The static cargo load of bulk cargoes is to be determined by the following formula:

$$P_{SB} = \rho_C g\, h\, n \qquad [kN/m^2]$$

ρ_C = Density of cargo as defined in 4.2.

h = Vertical distance in m from the load point to the highest point of the hold including hatchway in general.

n = $\sin^2\alpha \tan^2\left(45° - \frac{\gamma}{2}\right) + \cos^2\alpha$

α = Angle between the structural element considered and a horizontal plane [deg]

γ = Angle of repose of the cargo [deg]

≤ 20° for light bulk cargo (e.g. coal, grain),

≤ 35° for heavy bulk cargo (e.g. ore);

4.4 The static deck load in accommodation and service spaces may be taken:

$P_{SA} = 5.0$ kN/m² for large public spaces (restaurants, halls, cinemas, lounges, etc)

$P_{SA} = 3.5$ kN/m² for cabins and other compartments

The static deck load in accommodation and service spaces can be directly calculated but not to be taken less than 2,5 kN/m².

4.5 The static deck load on platform deck in machinery spaces may be taken as:

$$P_{SM} = 8 \qquad [kN/m^2]$$

4.6 The static forces due to units of cargo are to be determined as follows:

$$F_S = M_C g \qquad [kN]$$

M_C = Mass of cargo unit [t]

4.7 Significant single forces are to be considered by **TL** on a case by case basis

D. Dynamic Local Loads

1. General

1.1 This sub-section provides the envelope values for wave pressure loads on side shell, bottom, exposed decks and bow and stern structures. Also provided are the dynamic loads on cargo decks, accommodation and machinery decks and dynamic tank pressure loads.

2. Wave Load on Side Shell

The external wave pressure load P_{WS} on the ship's sides is to be determined according to 2.1 and 2.2.

2.1 For elements the load centre of which is located below the waterline:

2.1.1 In head seas:

$$P_{WS} = 1.2 C_W C_S \left(C_B + 0.7\right)\left(1 + \frac{2y}{B} + \frac{z}{T}\right) \qquad [kN/m^2]$$

B = Breadth of ship [m], as defined in Section 1, H.2,

T = Draught of ship [m], as defined in Section 1, H.2,

y = Horizontal distance between load centre and centreline [m],

z = Vertical distance of the structure's load centre above base line [m],

C_B = Moulded block coefficient, as defined in Section 1, H.4, not to be taken less than 0.6,

C_W = Wave coefficient as defined in B.2.1,

C_S = Longitudinal pressure distribution coefficient, given by.

$C_S = 1 + \frac{0.7}{C_B}$ at AP and aft

$C_S = 1$ between 0.2L and 0.7L from AP

$C_S = 1 + \frac{1.5}{C_B}$ at FP and forward

Between specified areas C_S shall be varied linearly.

2.1.2 In beam seas:

$$P_{WS} = 1.8C_W\left(C_B + 0.7\right)\left(1 + \frac{z}{T}\right) + \frac{135y}{B + 75} \quad [kN/m^2]$$

2.2 For elements the load centre of which is located above load waterline

2.2.1 In head seas:

$$P_{WS} = 1.2C_W C_S\left(C_B + 0.7\right)\left(3 + \frac{2y}{B} - \frac{z}{T}\right) \quad [kN/m^2]$$

2.2.2 In beam seas:

$$P_{WS} = 3.6C_W\left(C_B + 0.7\right) + \frac{135y}{B + 75} - 10\left(z - T\right) \quad [kN/m^2]$$

3. Wave Load on Bottom

The external wave pressure load on the ship's bottom is to be determined according to the following formula:

3.1 In head seas:

$$P_{WB} = 1.2C_W C_S\left(C_B + 0.7\right)\left(1 + \frac{2y}{B}\right) \quad [kN/m^2]$$

3.2. In beam seas:

$$P_{WB} = 1.8C_W\left(C_B + 0.7\right) + 135\frac{y}{B + 75} \quad [kN/m^2]$$

4. Wave Load on Weather Decks

4.1 The external wave pressure load on weather decks is to be determined according to the following formula:

$$P_{WD} = 0.5\rho_{SW}\left(g + a_V\right)\left(S_A - z\right) \quad [kN/m^2]$$

a_V = Vertical acceleration at the load point as defined in B.2.1.

z = Vertical distance from the waterline at draught T to the load point (m)

The relative motion at the load point is given by:

$$S_A = \sqrt{H^2 + \left(x\varphi\right)^2} \quad [m]$$

Heave amplitude is given by:

$$H = \frac{a_Z}{\left(2\pi / T_H\right)^2} \quad [m]$$

a_Z = Vertical acceleration due to heave [m/s^2]

T_H = Heave period (s)

$= 1.8\sqrt{\frac{L}{g}}$ [s]

φ = Pitch amplitude as defined in B.2.1.

x = Longitudinal distance of load point from pitch axis of rotation 0,45L from AP (m)

$\left(S_A - z\right)$ is not to be taken less than 2 m.

For ships engaged in sheltered water service (assigned with **K6, L1** and **L2** notations), the deck load on weather decks is to be taken as P_D = 6 kN/m^2 unless a greater load is required by the Owner.

4.2 Where deck cargo is intended to be carried on the weather deck the dynamic load is to be taken as greater of the following values:

- Wave pressure load determined according to 4.1.
- Dynamic cargo load determined according to 6.1.

5. Wave Loads on Decks of Superstructures and Deckhouses

5.1 The load on exposed decks and parts of superstructure and deckhouse decks, which are not to be treated as strength deck, is to be determined as follows:

$$P_{DE} = nP_{WD} \qquad [kN/m^2]$$

P_{WD} = Wave pressure load on weather deck according to 4.1

n = $1 - \frac{z - D}{\rho_{SW} g}$, not to be taken less than 0.5.

n = 1.0 for the forecastle deck

5.2 For deckhouses the wave pressure load determined in 5.1 may be multiplied by the factor

$$0.7\frac{b'}{B'} + 0.3$$

b′ = Breadth of deckhouse [m],

B′ = Largest breadth of ship at the position considered [m].

Except for the forecastle deck the minimum wave pressure load on decks of superstructures and deck houses is to be taken as 4.0 kN/m^2.

5.3 For exposed wheel house tops the load is not to be taken less than 2.5 kN/m^2.

6. Dynamic Loads on Cargo Decks

6.1 The dynamic load on cargo decks is to be determined according to the following formula:

$$P_{DC} = P_{SC}\frac{a_V}{g} \qquad [kN/m^2]$$

P_{SC} = Static cargo load as given in C.4.1 [kN/m^2]

a_V = Vertical acceleration at the load point as given in B.2.1.

6.2 The dynamic loads due to single forces F_S (e.g. in case of containers) are to be determined as follows:

$$F_D = F_S\frac{a_V}{g} \qquad [kN]$$

6.3 The dynamic pressure load due to bulk cargoes is to be determined by the following formula:

$$P_{DB} = P_{SB}\frac{a_V}{g} \qquad [kN/m^2]$$

P_{SB} = Static bulk cargo load, as given in C.4.3.

6.4 The dynamic inner bottom cargo load is to be determined as follows:

$$P_{DI} = P_{SI}\frac{a_V}{g} \qquad [kN/m^2]$$

P_{SI} = Static bulk cargo load, as given in C.4.2.

For calculating a_V the distance between the centre of gravity of the hold and the aft end of the length L is to be taken.

For inner bottom load in case of ore stowed in conical shape, see Section 27.

7. Dynamic Loads on Accommodation and Machinery Decks

7.1 The dynamic deck load in accommodation and service spaces may be taken:

$P_{DA} = 5.0\frac{a_V}{g}$ kN/m^2 For large public spaces (restaurants, halls, cinemas, lounges, etc),

$P_{DA} = 3.5\frac{a_V}{g}$ kN/m^2 For cabins and other compartments.

7.2 The dynamic deck load on platform deck in machinery spaces may be taken as:

$$P_{DM} = 8.0\frac{a_V}{g} \qquad [kN/m^2]$$

8. Dynamic Loads on Tank Structures

8.1 Design pressure for filled tanks

8.1.1 The dynamic design pressure for filled tanks in service condition is to be taken as:

$$P_{DT} = \rho_L \left[a_V \left(z_{TOP} - z \right) + a_T (b/2 - y) \right] \quad [kN/m^2]$$

ρ_L = Density of liquid in the tank, not to be taken less than 1.025 t/m^3

z_{TOP} = z coordinate of the top of the tank [m],

z = z coordinate of the load point [m],

a_V = Vertical acceleration [m/s^2] as given in B.2,

a_T = Transverse acceleration [m/s^2] as given in B.3,

b = Upper breadth of tank [m],

y = Distance of load centre from the vertical longitudinal central plane of tank [m].

8.1.2 Regarding the design pressure of fuel tanks and ballast tanks which are connected to an overflow system, the dynamic pressure increase due to the overflowing is to be taken into account in addition to the static pressure height up to the highest point of the overflow system.

8.2 Design pressure for partially filled tanks

8.2.1 For tanks which may be partially filled between 20% and 90% of their height, the design pressure is not to be taken less than given by the following formulae:

8.2.2 For structures located within $\ell_T/4$ from the bulkheads limiting the free liquid surface in the ship's longitudinal direction:

$$P_{T4} = \left(4 - \frac{L}{150} \right) \ell_T \rho_L n_x + p_V \quad [kN/m^2]$$

p_V = Setting of pressure relief valve according to C.3.2.3

ℓ_T = Distance [m] between transverse bulkheads or effective transverse wash bulkheads at the height where the structure is located.

n_x = $1 - \frac{4}{\ell_T} x_1$

x_1 = Distance of structural element from the tank's ends in the ship's longitudinal direction [m]

8.2.3 For structures located within b_T / 4 from the bulkheads limiting the free liquid surface in the ship's transverse direction:

$$P_{T5} = \left(5.5 - \frac{B}{20} \right) b_T \rho_L n_y + p_V \quad [kN/m^2]$$

b_T = Distance [m] between tank sides or effective longitudinal wash bulkhead at the height where the structure is located.

n_y = $1 - \frac{4}{b_T} y_1$

y_1 = Distance of structural element from the tank's sides in the ship's transverse direction [m].

p_V = Setting of pressure relief valve according to C.3.2.3

8.2.4 For tanks with ratios $\ell_T/L>0.1$ or $b_T/B>0.6$ direct calculation of the pressure, P_{DT}, may be required.

E. Impact Loads

1. Bow Impact Load

The design load for bow structures from forward to 0.1L behind FP and above the ballast waterline in accordance with the draft T_{BFP}, is to be determined according to the following formula:

$$P_{IB} = 0.35 C_W \left(0.4 V \sin\alpha + 0.6\sqrt{L} \right)^2 \quad [kN/m^2]$$

C_W = Wave coefficient, as defined in B.2.1.

α = Flare angle at the load centre is to be measured in the plane of frame between a vertical line and the tangent to the side shell plating (See Figure 5.5).

T_{BFP} = Smallest design ballast draught defined at forward perpendicular for normal ballast conditions [m]

For unusual bow shapes P_{IB} can be specially considered.

P_{IB} shall not be smaller than wave pressure load, P_{WS}, given in D.2.2.

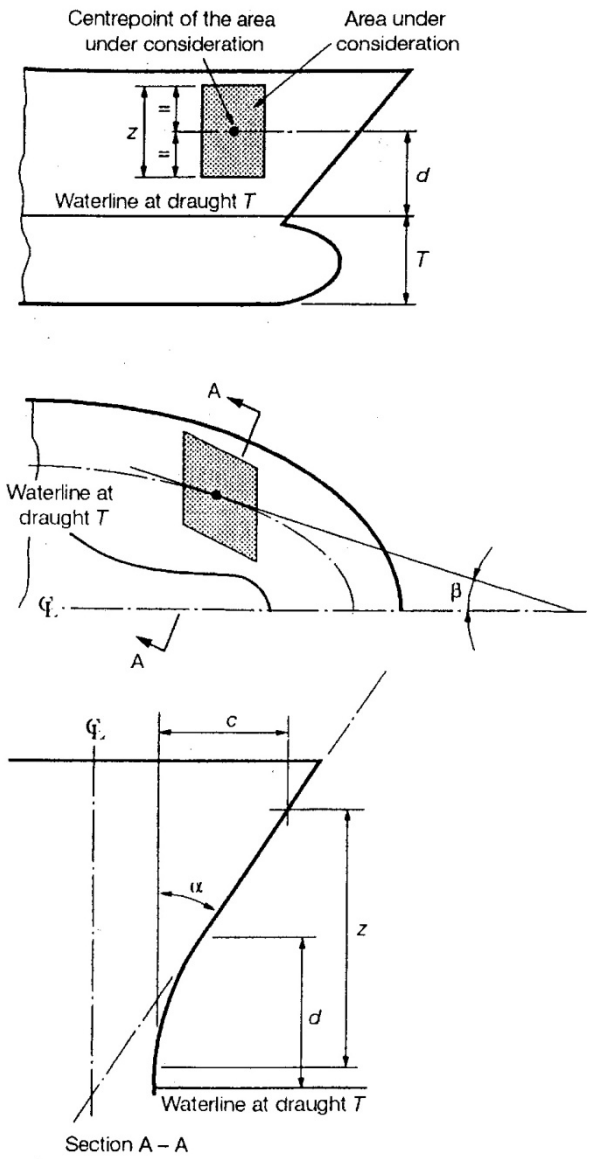

α may normally be taken as:

$$\arctan\left(\frac{c}{z}\right)$$

Where z is the vertical extent of the area under consideration and c is the horizontal extent of the area under consideration.

Figure 5.5 Determination of flare angle

Aft of 0.1L from FP up to 0.15L from FP the pressure between P_{IB} and P_{WS} is to be graded steadily.

The design load for bow doors is given in Section 23, B.3.

2. Stern Impact Load

The design load for stern structures from the aft end to 0.1L forward of the aft end of L and above the smallest design ballast draught at the centre of the rudder stock up to $T+C_W/2$ is to be determined according to the following formula:

$$P_{IS} = C_A L \qquad [kN/m^2]$$

C_A = 0.36 In general

= $0.88 \sin^2 \alpha$ For extremely flared sides where the flare angle α is larger than 40°

The flare angle α at the load centre is to be measured in the plane of frame between a vertical line and the tangent to the side shell plating.

P_{IS} shall not be smaller than wave pressure load, P_{WS}, given in D.2.2.

3. Slamming Load

The bottom slamming pressure to be considered for the reinforcement of the flat bottom forward is to be obtained from the following formula:

$$P_{SL} = 80 C_1 C_{SL} \sqrt{L}\left(1 + C_{RS}\right) \qquad \text{for } L \le 150 \text{ m}$$

$$P_{SL} = 990 C_1 C_{SL}\left(1.3 - 0.002L\right)\left(1 + C_{RS}\right) \qquad \text{for } L > 150 \text{ m}$$

$$C_1 = 3.6 - 6.5\left(\frac{T_{BFP}}{L}\right)^{0.2} \qquad 0 \le c_1 \le 1.0$$

T_{BFP} = As defined in 1.

C_{SL} = Distribution factor taken equal to (see Figure 5.6):

$C_{SL} = 0$ for $\frac{x}{L} \le 0.5$

$$C_{SL} = \frac{\frac{x}{L} - 0.5}{C_2} \quad \text{for} \quad 0.5 < \frac{x}{L} \leq 0.5 + C_2$$

$$C_{SL} = 1.0 \quad \text{for} \quad 0.5 + C_2 < \frac{x}{L} \leq 0.65 + C_2$$

$$C_{SL} = 0.5\left(1 + \frac{1 - \frac{x}{L}}{0.35 - C_2}\right) \quad \text{for} \quad \frac{x}{L} > 0.65 + C_2$$

$$C_2 = 0.33C_B + \frac{L}{2500}$$, to be taken not greater than 0.35.

C_{RS} = Service range coefficient, as defined in B.2.

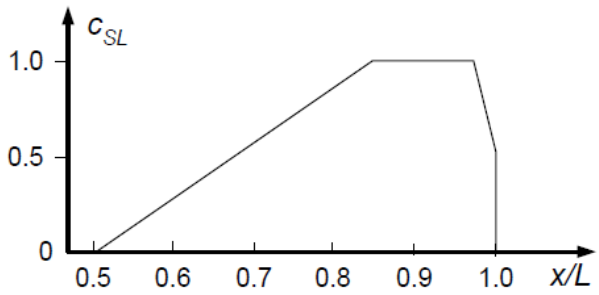

Figure 5.6 Distribution factor C_{SL}

SECTION 6

LONGITUDINAL STRENGTH

A. General Definitions

1. Scope

1.1 In this section rules related to longitudinal strength calculations are given.

1.2 For ships of length 65 m and or above (ships in category I-II as defined in H,1.3), the scantlings of longitudinal hull structure are determined on the basis of longitudinal calculations.

For ships of length 65 m below, the minimum midship section modulus according to C.2 is to be fulfilled.

1.3 Longitudinal strength calculations presented in this section do not apply to ships with any of the following characteristics:

- unusual type or design
- unusual form (e.g. L/B ≤ 5, B/H ≥ 2.5, L ≥ 500 m, C_B < 0.6)
- ships with large deck openings
- ships with large bow and stern flare and cargo on deck in these areas
- carriage of heated cargoes
- $V \geq 1.6\sqrt{L}$ [knots]

For ships having one or more characteristics above **TL** may require determination of wave bending moments as well as their distribution over the ship's length by approved calculation procedures. Such calculation procedures must take into account heaving and pitching motions in a natural seaway.

1.4 For bulk carriers with notation **BC-A**, **BC-B** or **BC-C** (refer to Classification and Survey Rules for definition of these notations) these rules are to be complied with by ships contracted for construction on or after 1 July 2003. For other ships, these rules are to be complied with by ships contracted for construction on or after 1 July 2004.

These rules do not apply to CSR Bulk Carriers and Oil Tankers or to container ships to which item I is applicable.

2. Assumptions for Calculation, Loading Conditions

2.1 For determining the scantlings of the longitudinal hull structure the maximum values of the still water bending moments and shear forces are to be used. Still water bending moments, Ms (kNm), and still water shear forces, Fs (kN), are to be calculated at each section along the ship length for design cargo and ballast loading conditions as specified in A.2.3.

2.2 For these calculations, downward loads are assumed to be taken as positive values, and are to be integrated in the forward direction from the aft end of L. The sign convention shall be applied for shear force and bending moment as shown in Fig. 6.1.

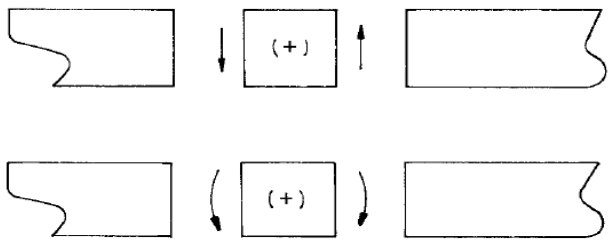

Figure 6.1 Sign convention

2.3 The calculation of still water bending moments and shear forces is to be carried out for the following loading conditions:

- Departure condition,
- Arrival condition,
- Transitory conditions (reduced provisions and ballast variations between departure and arrival).
- Ballasting and/or deballasting conditions
- Docking condition afloat

These general loading conditions are given in detail in Section 26 for ship types.

3. General Requirements

Where for ships of unusual design and form as well as for ships with large deck openings a complex stress analysis of the ship in the seaway becomes necessary, the analysis will normally be done by using computer programs or calculation methods approved by **TL**.

4. Definitions

k = Material factor according to Section 3, A.2.

C_B = Block coefficient as defined in Section 1, H.4.

C_W = Wave coefficient according to Section 5

C_L = Length coefficient according to Section 5

x = Distance in [m] between aft end of length **L** and the position considered

V = Speed of the ship in [knots] according to Section 1, H.5.

I_y = Moment of inertia of the midship section in [m^4] around the horizontal axis

e_B = Distance in [m] between neutral axis of section and base line

e_D = Distance in [m] between neutral axis of section and deck line at side

e_z = Vertical distance of the structural element considered from the horizontal neutral axis [m] (positive sign for above the neutral axis, negative sign for below)

W_B = Section modulus of section in [m^3] related to base line

W_D = Section modulus of section in [m^3] related to deck line at side

$S_y(z)$ = First moment of the sectional area considered [m^3], above or below, respectively, the level z considered, and related to the horizontal, neutral axis.

M_T = Total bending moment in the seaway in [kNm]

= $M_{SW} + M_{WV}$

M_{SW} = Permissible vertical still water bending moment in [kNm] (positive sign for hogging, negative sign for sagging condition)

M_{WV} = Vertical wave bending moment [kNm] (positive sign for hogging, negative sign for sagging condition)

M_{ST} = Static torsional moment in [kNm]

M_{WT} = Wave induced torsional moment in [kNm]

M_{WH} = Hozirontal wave bending moment [kNm] (positive sign for tension in starboard side, negative for compression in starboard side)

Q_T = Total vertical shear force in the seaway in [kN]

= $Q_{SW} + Q_{WV}$

Q_{SW} = Permissible vertical still water shear force in [kN]

Q_{WV} = Vertical wave shear force in [kN]

Q_{WH} = Horizontal wave shear force in [kN].

B. Still Water, Wave Bending and Torsional Moments and Shear Force

1. General

In general the global loads on the hull in a seaway can be calculated with the formulas stated below.

2. Still Water Bending Moments and Shear Force

2.1 General

Vertical still water bending moment and shear force values are to be obtained by using a method and/or computer program approved by **TL** for loading conditions described in A, 2.3. Calculations shall be

performed for intact (M_{SW}, Q_{SW}) and if required (see G.1) damaged (M_{SWf}, Q_{SWf}) conditions.

Depending on the ship's structure and loading condition torsional moments shall be considered.

Still water bending moment and shear force shall be added to wave bending moment and shear force defined in 3.

2.2 Guidance values for containerships with random loading

2.2.1 Still water bending moments

When determining the required section modulus of the midship section of containerships in the range:

$$\frac{x}{L} = 0{,}3 \quad \text{to} \quad \frac{x}{L} = 0.55$$

It is recommended to use at least the following initial value for the hogging still water bending moment:

M_{SWini} = $n_1 \cdot C_W \cdot \mathbf{L}^2 \cdot \mathbf{B} \cdot (0.213 - 0.015 \cdot C_B)$

$$n_1 = 1.07 \cdot \left[1 + 15 \cdot \left(\frac{n}{10^5}\right)^2\right] \leq 1.2$$

n = According to 2.2.2

M_{SWini} shall be graduated regularly to ship's ends.

2.2.2 Static torsional moment

The maximum static torsional moment may be determined by:

$$M_{STmax} = \pm 20 \cdot B \cdot \sqrt{CC} \quad [\text{kNm}]$$

CC = Maximum permissible cargo capacity of the ship [t]

= N · G

n = Maximum number of 20'-containers (TEU) of the mass G the ship can carry

G = Mean mass of a single 20'-container [t]

For the purpose of a direct calculation the following enveloping curve of the static torsional moment over the ship's length are to be taken:

$M_{ST} = 0.568 \cdot M_{STmax} (|C_{T1}| + C_{T2})$ [kNm]

C_{T1} - C_{T2} = Torsional distribution factors, see 3.5

3. Wave Bending Moment, Shear Force and Torsional Moment

3.1 Vertical Wave Bending Moments

The vertical wave bending moment is to be determined by the following formula:

Hogging condition:

$M_{WV} = 0.19 \cdot L^2 \cdot B \cdot C_B \cdot C_W \cdot C_L \cdot C_M$ [kNm]

Sagging condition:

$M_{WV} = -0.11 \cdot L^2 \cdot B \cdot (C_B + 0.7) \cdot C_W \cdot C_L \cdot C_M$ [kNm]

C_W, C_L = See Section 5, 2.3

C_M = Distribution factor, see also Figure 6.2

C_{MH} = Hogging condition

$= 2.5 \cdot \frac{x}{L}$ for $0 \leq \frac{x}{L} < 0.4$

$= 1.0$ for $0.4 \leq \frac{x}{L} \leq 0.65$

$= \frac{1.0 - \frac{x}{L}}{0.35}$ for $0.65 < \frac{x}{L} \leq 1$

C_{MS} = Sagging condition

$C_{MS} = C_V \, 2.5 \frac{x}{L}$ for $0 \leq \frac{x}{L} < 0.4$

$= C_V$ for $0.4 \leq \frac{x}{L} \leq 0.65 \cdot C_V$

$= C_V - \frac{\frac{x}{L} - 0.65 \cdot C_V}{1 - 0.65 \cdot C_V}$ for $0.65 \cdot C_V < \frac{x}{L} \leq 1$

C_v = Influence with regard to speed v of the vessel for L the value need not be less than 100

$$C_v = \sqrt[3]{\frac{V}{1.4\sqrt{L}}} \geq 1{,}0$$

= 1.0 for damaged condition

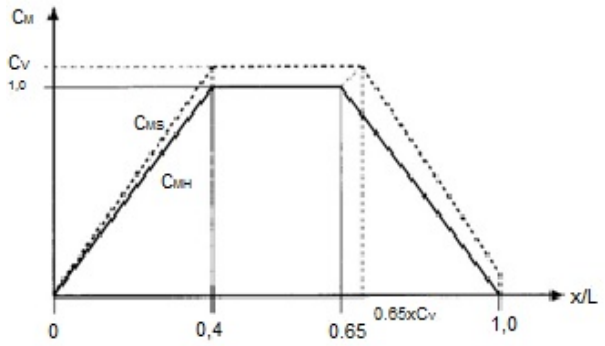

Figure 6.2 Distribution factor C_M and influence factor C_V

3.2 Vertical Wave Shear Forces

The vertical wave shear forces are to be determined by the following formula:

$$Q_{WV} = C_W \cdot C_L \cdot \mathbf{L} \cdot \mathbf{B} \cdot (C_B + 0.7) \cdot c_Q \text{ [kN]}$$

C_W, C_L = See Section 5, 2.3.

C_Q = Distribution factor according to Table 6.1, see also Fig. 6.3.

C_{1H} = $0.19 \cdot C_B$, for hogging condition

C_{1S} = $-0.11 \cdot (C_B + 0.7)$, for sagging condition

$$m = -\frac{C_{1H}}{C_{1S}}$$

Table 6.1 Distribution factor C_Q

Range	Positive shear forces	Negative shear forces
$0 \leq \frac{x}{L} < 0.2$	$1.38 \cdot m \cdot \frac{x}{L}$	$-1.38\frac{x}{L}$
$0.2 \leq \frac{x}{L} < 0.3$	$0.276 \cdot m.$	-0.276
$0.3 \leq \frac{x}{L} < 0.4$	$1.104 \cdot m - 0.63 + (2.1 - 2.76 \cdot m)\frac{x}{L}$	$-\left[0.474 - 0.66\frac{x}{L}\right]$
$0.4 \leq \frac{x}{L} < 0.6$	0.21	-0.21
$0.6 \leq \frac{x}{L} < 0.7$	$(3C_V - 2.1)(\frac{x}{L} - 0.6) + 0.21$	$-\left[1.47 - 1.8 \cdot m + 3(m - 0.7)\frac{x}{L}\right]$
$0.7 \leq \frac{x}{L} < 0.85$	$0.3\ C_V$	-0.3 m.
$0.85 \leq \frac{x}{L} \leq 1.0$	$\frac{1}{3}\left[C_V\left(14\frac{x}{L} - 11\right) - 20\frac{x}{L} + 17\right]$	$-2 \cdot m \cdot \left[1 - \frac{x}{L}\right]$

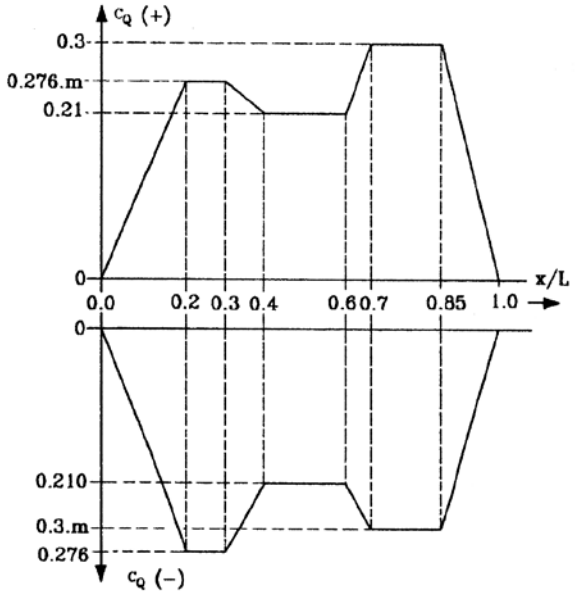

Figure 6.3 Distribution factor C_Q

3.3 Horizontal bending moments

M_{WH} = 032 · **L** · Q_{WHmax} · C_M [kNm]

C_M = See 3.1, but for C_V = 1

Q_{WHmax} = See 3.4

3.4 Horizontal shear forces

Q_{WHmax} = $\mp C_N \cdot \sqrt{L \cdot T} \cdot B \cdot C_B \cdot C_W \cdot C_L$ [kN]

C_N = 1+0.15 **L/B**, C_{Nmin} = 2

Q_{WH} = Q_{WHmax} · C_{QH}

c_{QH} = Distribution factor, acc. to Table 6.2 see also Figure 6.4

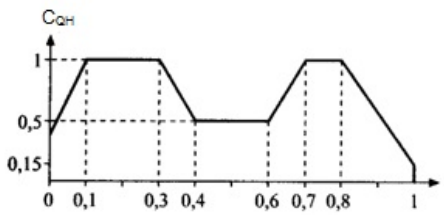

Figure 6.4 Distribution factor C_{QH}

Table 6.2 Distribution factor C_{QH}

Range	C_{QH}
$0 \le \frac{x}{L} < 0.1$	$0.4 + 6 \cdot \frac{x}{L}$
$0.1 \le \frac{x}{L} \le 0.3$	1
$0.3 < \frac{x}{L} < 0.4$	$1.0 - 5 \cdot \left(\frac{x}{L} - 0.3\right)$
$0.4 \le \frac{x}{L} \le 0.6$	0.5
$0.6 < \frac{x}{L} < 0.7$	$0.5 + 5 \cdot \left(\frac{x}{L} - 0.6\right)$
$0.7 \le \frac{x}{L} \le 0.8$	1.0
$0.8 < \frac{x}{L} \le 1.0$	$1.0 - 4.25 \cdot \left(\frac{x}{L} - 0.8\right)$

3.5 Torsional moments

The maximum wave induced torsional moment is to be determined as follows:

M_{WTmax} = ± L · B^2 · C_B · C_W · C_L · (0.11 + $\sqrt{a^2 + 0.012}$) [kNm]

a_{min} = 0.1

$$a = \sqrt{\frac{T}{L}} \cdot \frac{C_N \cdot z_Q}{B}$$

C_N = See 3.4

z_Q = Distance [m] between shear centre and a level at $0{,}2\frac{B \cdot H}{T}$ above the basis

When a direct calculation is performed, for the wave induced torsional moments the following enveloping curve is to be taken:

$$M_{WT} = \mp L \cdot B^2 \cdot C_B \cdot C_W \cdot C_L \cdot C_{WT} \quad [kNm]$$

C_{WT} = Distribution factor, see also Figure 6.5

$$= \left[a \cdot \left| C_{T1} \right| + 0.22 \cdot C_{T2} \right] \cdot \left(0.9 + 0.08 \cdot a \right)$$

C_{T1} , C_{T2} = Torsion distribution factor as follow:

C_{T1} = $\sin^{0.5}\left(2\pi \frac{x}{L}\right)$ $0 \le \frac{x}{L} < 0.25$ için

= $\sin\left(2\pi \frac{x}{L}\right)$ $0.25 \le \frac{x}{L} \le 1.0$ için

C_{T2} = $\sin\left(\pi \frac{x}{L}\right)$ $0 \le \frac{x}{L} < 0.5$ için

= $\sin^{2}\left(\pi \frac{x}{L}\right)$ $0.5 \le \frac{x}{L} \le 1.0$ için

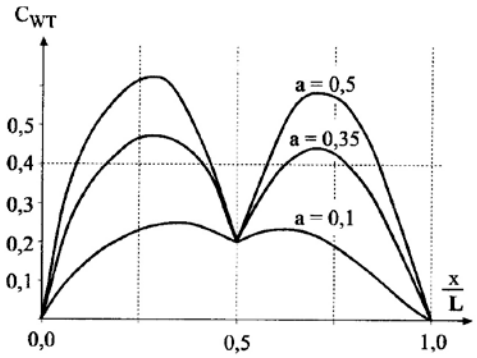

Figure 6.5 Distribution factor C_{WT}

C. Section Moduli, Moments of Inertia, Shear and Buckling Strength

1. Section Moduli As a Function of Longitudinal Bending Moments

1.1 The section moduli related to deck W_D respectively $W_{D'}$ or bottom are not to be less than:

$$W = f_r \cdot \frac{|M_T|}{\sigma_p \cdot 10^3} \quad [m^3]$$

f_r = 1.0

f_r = 1.1 for ships with large openings

M_T = M_{SW} + M_{WV}

Ships, for which also at damaged condition sufficient longitudinal strength is to be proved, the section modulus is not to be less than

$$W_f = \frac{\left| M_{SWf} + 0.8 \cdot M_{WV} \right|}{\sigma_p \cdot 10^3} \quad [m^3]$$

See B.2.1 and G.

σ_p = Permissible hull girder bending stress in [N/mm^2]

σ_p = $C_S \cdot \sigma_{p0}$

σ_{p0} = $\frac{85 + L}{k}$ for **L** < 90 m.

σ_{p0} = $\frac{175}{k}$ for **L** ≥ 90 m.

for 0 ≤ < 0.3

C_S = 1.0 for $0.3 \le \frac{x}{L} \le 0.7$

$C_S = \frac{5}{3}\left[1.3 - \frac{x}{L}\right]$ for $0.7 < \frac{x}{L} \le 1.0$

C_S = Permissable stress distribution factor of Ship Hull See also Fig. 6.6.

1.2 The required section moduli have to be fulfilled inside and outside 0.4L amidships in general. Outside 0.4L particular attention is to be paid for the following locations:

- in way of the forward end of the engine room
- in way of the forward end of the foremost cargo hold
- at any locations where there are significant changes in hull cross-section

- at any locations where there are changes in the framing system

- for ships with large deck openings such as containerships, locations at or near 0.25 L and 0.75 L

- for ships with cargo holds aft of the superstructure, deckhouse or engine room, sections in way of the aft end of the aft-most hold and in way of the aft end of the superstructure, deckhouse or engine room

1.3 For the ranges outside 0.4 **L** amidships the factor may be increased up to C_S=1.0, if this is justified under consideration of combined stresses due to longitudinal hull girder bending (including bending due to impact loads), horizontal bending, torsion and local loads and under consideration of buckling strength.

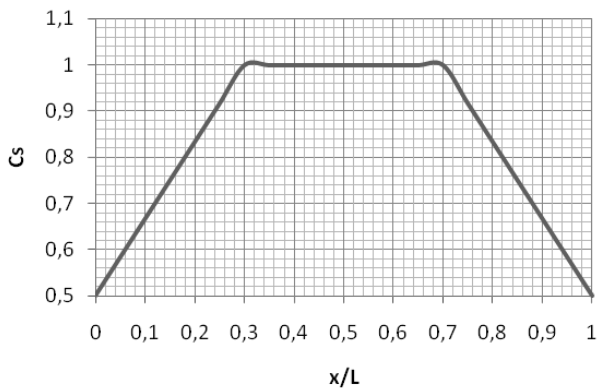

Figure 6.6 c_S Stress distribution factor

2. Minimum Midship Section Modulus

2.1 The section modulus related to deck and bottom is not to be less than the following minimum value:

$$W_{min} = k \cdot C_W \cdot \mathbf{L}^2 \cdot \mathbf{B} \cdot (C_B + 0.7) \cdot 10^{-6} \quad , \ [m^3]$$

C_W = According to Section 5, for unlimited service range (C_{RS} = 1.0).

2.2 The scantlings of all continuous longitudinal members based on the minimum section modulus requirement are to be maintained within 0.4 **L** amidships.

However, in special cases, based on consideration of type of ship, hull form and loading conditions, the scantlings may be gradually reduced towards the end of the 0.4 L part, bearing in mind the desire not to inhibit the vessel's loading flexibility.

2.3 In ships where part of the longitudinal strength material in the deck or bottom area are forming boundaries of tanks for oil cargoes or ballast water and such tanks are provided with an effective corrosion protection system, certain reductions in the scantlings of these boundaries are allowed. These reductions, however, should in no case reduce the minimum hull girder section modulus for a new ship by more than 5%.

3. Midship Section Moment of Inertia

The moment of inertia related to the horizontal axis is not to be less than

$$I_y = 3 \cdot 10^{-2} \cdot W \cdot \mathbf{L}/k \quad [m^4]$$

Note:
For W see 1. and/or 2.1, the greater value is to be taken.

4. Calculation of Section Moduli

4.1 The bottom section modulus W_B and the deck section modulus W_D are to be determined by the following formula:

$$W_B = I_y / e_B \quad [m^3]$$

$$W_D = I_y / e_D \quad [m^3]$$

Continuous structural elements above e_D (e.g. trunks, longitudinal hatch coamings, decks with a large camber, longitudinal stiffeners and longitudinal girders arranged above deck, bulwarks contributing to longitudinal strength etc.) may be considered when determining the section modulus, provided they have shear connection with the hull and are effectively supported by longitudinal bulkheads or by rigid longitudinal or transverse deep girders.

The fictitious deck section modulus is then to be determined by the following formula:

W'_D = I_y / e'_D [m^3]

e'_D = $z \cdot (0{,}9 + 0{,}2 \cdot y/\mathbf{B})$ [m]

z = Distance in [m] from neutral axis of the cross section considered to top of continuous strength member,

y = Distance in [m] from center line to top of continuous strength member.

It is assumed that $e'_D > e_D$.

For ships with multi-hatchways see 5.

4.2 When calculating the midship section modulus openings of continuous longitudinal strength members may be taken into account.

Large openings, i.e. openings exceeding 2,5 m. in length or 1,2 m. in breadth and scallops, where scallop-welding is applied, are to be deducted from the sectional areas used in the section modulus calculation. Smaller openings (manholes, lightening holes, single scallops in way of seams etc.) need not be deducted provided that the sum of their breadths or shadow area breadths in one transverse section is not reducing the section modulus at deck or bottom by more than 3 % and provided that the height of lightening holes, draining holes and single scallops in longitudinals or longitudinal

girders does not exceed 25 % of the web depth, for scallops 75 mm. at most.

A deduction-free sum of smaller opening breadths in one transverse section in the bottom or deck area of 0,06 (B - Σb) may be considered equivalent to the above reduction in section modulus by 3 %.

B = Breadth of the ship at the considered transverse section [m]

Σb = Sum of breadth of large openings [m]

The shadow area is obtained by drawing two tangent lines with an opening angle of 30°, see Figure 6.7.

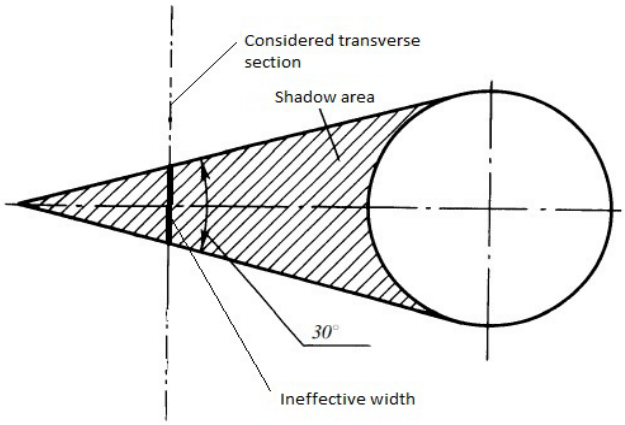

Figure 6.7 Shadow area

Guidance:

In case of large openings local strengthening may be required which will be considered in each individual case (see also Section 7, D.5).

5. Ships with Multi-Hatchways

5.1 For the determination of section moduli 100 % effectivity of the longitudinal hatchway girders between the hatchways may be assumed, if an effective attachment of these girders is given.

5.2 An effective attachment of the longitudinal hatchway girder must fulfill the following condition:

The longitudinal displacement f_L of the point of attachment due to action of a standard longitudinal force P_L is not to exceed

$f_L = \ell/20$ [mm]

ℓ = Length of transverse hatchway girder according to Fig. 6.8 [m].

$P_L = 10 \cdot A_{LG}$ [kN]

A_{LG} = Entire cross sectional area of the longitudinal hatchway girder in [cm^2]

See also Fig. 6.8.

Where the longitudinal displacement exceeds $f_L = \ell/20$, special calculation of the effectivity of the longitudinal hatchway girders may be required.

5.3 For the permissible composed stress see Section 8 D.

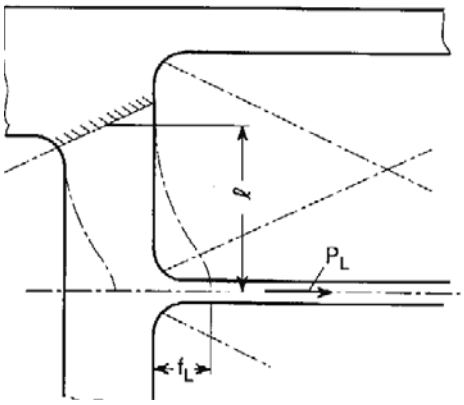

Figure 6.8 Ship with multi-hatchways

6. Shear Strength

The shear stress in longitudinal structures due to the vertical transverse forces Q_T acc. to E.2 and E.3 must not exceed 110/k N/mm^2.

For ships with large deck openings and/or for ships with large static torsional moments, also the shear stresses due to M_{STmax} have to be considered adversely, i.e. increasing the stress level.

For ships, where also in damaged condition sufficient strength is to be proved, the shear forces Q_{SWf} and $0.8 \cdot Q_{WV}$ are to be assumed. The shear stress must not exceed 110/k N/mm^2.

The shear stress are to be determined according to D.3.

7. Proof of Buckling Strength

All longitudinal hull structural elements subjected to compressive stresses resulting from M_T according to E.1 and Q_T according to E.2 are to be examined for sufficient resistance to buckling according to Section 3, C. For this purpose the following load combinations are to be investigated:

- M_T and $0.7 \cdot Q_T$
- $0.7 \cdot M_T$ and Q_T.

The stresses are to be calculated according to. D.

8. Ultimate Strength Calculation of the Ship's Transverse Sections

In extreme conditions the calculation of the ultimate strength of ship's transverse sections may be required by **TL**. In this case the structural members which are included in the longitudinal strength shall be incorporated in the calculations and the scantlings of the longitudinal structural members shall be determined accordingly. Progressive collapse analysis can be used as the calculation method.

D. Design Stresses

1. General

Design stresses for the purpose of this rule are global load stresses, which are acting:

As normal stresses σ_L in ship's longitudinal direction:

- For plates as membrane stresses
- For longitudinal profiles and longitudinal girders in the bar axis

Shear stress τ_L in the plate level:

The stresses σ_L and τ_L are to be considered in the formulas for dimensioning of plate thicknesses (Section 7, C. Section 12, B.) longitudinal (Section 8) and grillage systems (Section 8).

The calculation of the stresses can be carried out by an analysis of the complete hull. If no complete hull analysis is carried out, the most unfavorable values of the stress combinations according to Table 5.3 are to be taken for σ_L and. τ_L respectively. The formulae in Table 5.3 contain σ_{SW}, σ_{WV}, σ_{WH}, σ_{ST} and σ_{WT} according to 2. and τ_{SW}, τ_{WV}, τ_{WH}, τ_{ST} and τ_{WT} according to 3. as well as:

f_F = Weighting factor for the simultaneousness of global and local loads.

= 0.8 for dimensioning of longitudinal structures according to Sections 3 and 7 to 12

For $= 0.75 + \frac{x}{L} \cdot \left(1 - \frac{x}{L}\right)$ fatigue strength calculations according to Section 3, D.

f_p = Probability factor according to Section 5.

f_{pmin} = 0.75 for $Q = 10^{-6}$

Note :

f_p is a function of the planned lifetime. For a lifetime of n>20 years, f_p may be determined by the following formula for a strength-line spectrum of seaway-induced stress ranges:

$$f_P = -0.125 \cdot log\left(\frac{2 \cdot 10^{-5}}{n}\right)$$

For greatest vertical wave bending moment:

$\sigma'_{WV} = (0.43 + C) \cdot \sigma_{WVhog}$

$\tau'_{WV} = (0.43 + C) \cdot \tau_{WVhog}$

For smallest vertical wave bending moment:

$\sigma'_{WV} = [0.43 + C \cdot (0.5 - C)] \cdot \sigma_{WVhog}$
$+ C \cdot (0.43 + C) \cdot \sigma_{WVsag}$

$\tau'_{WV} = [0.43 + C \cdot (0.5 - C)] \cdot \tau_{WVhog}$
$+ C \cdot (0.43 + C) \cdot \tau_{WVsag}$

$$C = \left(\frac{x}{L} - 0.5\right)^2$$

Note :

For the preliminary determination of the scantlings, it is generally sufficient to consider load case 1, assuming the simultaneous presence of σ_{L1a} and τ_{L1b} but disregarding stresses due to torsion.

The stress components (with the proper signs: tension positive, compression negative) are to be added such, that for σ_L and τ_L extreme values are resulting.

1.1 Buckling strength

For structures loaded by compression or shear forces, sufficient buckling strength according to Section 3, C. is to be proved.

Table 6.3 Load cases and stress combinations

Load case	Design stresses σ_L, τ_L
L1a	$\sigma_{L1a} = \sigma_{SW} + \sigma_{ST} + f_p \cdot \sigma_{WV}$
	$\tau_{L1a} = 0.7 \cdot \tau_{SW} + \tau_{ST} + 0.7 \cdot f_p \cdot \tau_{WV}$
L1b	$\sigma_{L1b} = 0.7 \cdot \sigma_{SW} + \sigma_{ST} + 0.7 \cdot f_p \cdot \sigma_{WV}$
	$\tau_{L1b} = \tau_{SW} + \tau_{ST} + f_p \cdot \tau_{WV}$
L2a	$\sigma_{L2a} = \sigma_{SW} + \sigma_{ST} + f_p \cdot (0.6 \cdot \sigma_{WV} + \sigma_{WH})$
	$\tau_{L2a} = 0.7 \cdot \tau_{SW} + \tau_{ST} + 0.7 \cdot f_p \cdot (0.6 \cdot \tau_{WV} + \tau_{WH})$
L2b	$\sigma_{L2b} = 0.7 \cdot \sigma_{SW} + \sigma_{ST} + 0.7 \cdot f_p \cdot (0.6 \cdot \sigma_{WV} + \sigma_{WH})$
	$\tau_{L2b} = \tau_{SW} + \tau_{ST} + f_p \cdot (0.6 \cdot \tau_{WV} + \tau_{WH})$
L3a	$\sigma_{L3a} = f_F \cdot [\sigma_{SW} + \sigma_{ST} + f_p \cdot (\sigma'_{WV} + \sigma_{WH} + \sigma_{WT})]$
	$\tau_{L3a} = f_F \cdot \{0.7 \cdot \tau_{SW} + \tau_{ST} + f_p \cdot [0.7 \cdot (\tau'_{WV} + \tau_{WH}) + \tau_{WT}]\}$
L3b	$\sigma_{L3b} = f_F \cdot \{0.7 \cdot \sigma_{SW} + \sigma_{ST} + f_p \cdot [0.7 \cdot (\sigma'_{WV} + \sigma_{WH}) + \sigma_{WT}]\}$
	$\tau_{L3b} = f_F \cdot [\tau_{SW} + \tau_{ST} + f_p \cdot (\tau'_{WV} + \tau_{WH} + \tau_{WT})]$

L1a, b = Load caused by vertical bending and static torsional moment.
L2a, b = Laod caused by vertical and horizontal bending moment as well as static torsional moment.
L3a, b = Load caused by vertical and horizontal bending moment as well as static and wave induced torsional moment.

1.2 Permissible stresses

The equivalent stress from σ_L and τ_L is not to exceed the following value:

$$\sigma_V = \sqrt{\sigma_L + 3 \cdot \tau_L} \leq \frac{190}{k} \quad \left[N/mm^2\right]$$

1.3 Structural design

1.3.1 In general, longitudinal structures are to be designed such that they run through transverse structures continuously. Major discontinuities have to be avoided.

If longitudinal structures must be staggered, sufficient shifting elements shall be provided.

1.3.2 The required welding details and classifying of notches result from the fatigue strength analysis according to Section 3, D.

In the upper respectively lower ship girder, for the welding joints the detail categories see Table 3.31 shall not be less than

$$\Delta\sigma_{Rmin} = \frac{\left(M_{WVhog} - M_{WVsag}\right) \cdot \left|e_z\right|}{\left(4825 - 29 \cdot n\right) \cdot I_y} \quad \left[N/mm^2\right]$$

M_{WVhog}, M_{WVsag} = Vertical wave bending moment for hogging and sagging according to B.3.1.

n = Expected life time of the ship ≥ 20 [years].

2. Normal Stresses in the Ship's Longitudinal Direction

2.1 Normal stresses from vertical bending moments

2.1.1 Statical from M_{SW}:

$$\sigma_{SW} = \frac{M_{SW} \cdot e_z}{I_y \cdot 10^3} \quad \left[N/mm^2\right]$$

M_{SW} = Still water bending moment according to A.4. at the position x/**L**

I_y = Moment of inertia [m^4] of the transverse ship section considered around the horizontal axis at the position x/**L**

e_z = Vertical distance of the structure considered from the horizontal neutral axis [m]

2.1.2 Dynamical from M_{WV}:

$$\sigma_{WV} = \frac{M_{WV} \cdot e_z}{I_y \cdot 10^3} \quad \left[N/mm^2\right]$$

2.2 Normal stresses due to horizontal bending moments

Dynamical from M_{WH}:

$$\sigma_{WH} = -\frac{M_{WH} \cdot e_y}{I_z \cdot 10^3} \quad \left[N/mm^2\right]$$

M_{WH} = Horizontal wave bending moment according to B.3.3 at the position x/**L**

I_z = Moment of inertia [m^4] of the transverse ship section considered around the vertical axis at the position x/**L**

e_y = Horizontal distance of the structure considered from the vertical, neutral axis [m] e_y is positive at the port side, negative at the starboard side.

2.3 Normal stresses from torsion of the ship's hull

When assessing the cross sectional properties the effect of wide deck strips between hatches constraining the torsion may be considered, e.g. by equivalent plates at the deck level having the same shear deformation as the relevant deck strips.

2.3.1 Statical from M_{STmax}:

For a distribution of the torsional moments according to B.2.2.2, the stresses can be calculated as follows:

$$\sigma_{ST} = \frac{0.65 \cdot C_{Tor} \cdot M_{STmax} \cdot \omega_i}{\lambda \cdot I_\omega \cdot 10^3} \cdot \left(1 - \frac{2}{e^a + 1}\right) \left[N/mm^2\right]$$

M_{STmax} = Maximum static torsional moment according to B.2.2.2

C_{Tor}, I_ω, ω_i, λ, e, a, ℓ_c, C_c, x_A see 2.3.2

For other distributions the stresses have to be determined by direct calculations.

2.3.2 Dynamical from M_{WTmax}:

$$\sigma_{WT} = \frac{C_{Tor} \cdot M_{WTmax} \cdot \omega_i}{\lambda \cdot I_\omega \cdot 10^3} \cdot \left(1 - \frac{2}{e^a + 1}\right) \quad \left[N/mm^2\right]$$

M_{WTmax} = According to B.3.5

C_{Tor} = $4 \cdot \left(\sqrt{C_B} - 0.1\right) \cdot \frac{x}{L}$ for $0 \le \frac{x}{L} < 0.25$

= $\sqrt{C_B} - 0.1$ for $0.25 \le \frac{x}{L} \le 0.65$

= $\frac{\sqrt{C_B} - 0.1}{0.35} \cdot \left(1 - \frac{x}{L}\right)$ for $0.65 < \frac{x}{L} \le 1$

I_ω = Sectorial of inertia moment [m^6] of the ship's transverse section at the position x/**L**

ω_i = Sectorial coordinate [m^2] of the structure considered

λ = Warping value

$$= \sqrt{\frac{I_T}{2.6 \cdot I_\omega}} \quad [1/m]$$

I_T = Torsional moment of inertia [m^4] of the ship's transverse section at the position x/**L**

e = Euler number (e = 2.718…)

a = $\lambda \cdot \ell_c$

ℓ_c = Characteristic torsion length [m]

$$= 2 \cdot C_B \cdot \left[1 - \left(1 - \frac{0.5}{C_B}\right) \cdot \left(\frac{\frac{L}{B} - 1}{4.284}\right)^2\right] \cdot L \cdot C_c \quad \text{for } \frac{L}{B} < 5.284$$

$$= 257 \cdot \left(\frac{B}{L}\right)^{2.33} \cdot B \cdot C_c \quad \text{for } \frac{L}{B} \ge 5.284$$

C_c = $0.8 - \frac{x_A}{L} + \left(0.5 + 2.5 \cdot \frac{x_A}{L}\right) \cdot \frac{x}{L}$

for $0 \le \frac{x}{L} < 0.4$ and $0 \le \frac{x_A}{L} \le 0.4$

= 1 for $0.4 \le \frac{x}{L} \le 0.55$

$= 1 - \frac{1}{0.45} \cdot \left(\frac{x}{L} - 0.55\right)$ for $0.55 < \frac{x}{L} \le 1$

x_A = 0 for ships without cargo hatches

= Distance [m] between the aft end of the length **L** and the aft edge of the hatch forward of the engine room front bulkhead on ships with cargo hatches, see also Fig. 6.11

3. Shear Stresses

Shear stress distribution should be calculated by calculation procedures approved by **TL**. For ships with multi-cell transverse cross sections (e.g. double hull ships), the use of such a calculation procedure, especially with non-uniform distribution of the load over the ship's transverse section, may be stipulated.

3.1 Shear stress due to vertical shear forces

For ships without longitudinal bulkheads or with 2 longitudinal bulkheads, the distribution of the shear stress in the shell and in the longitudinal bulkheads can be calculated with the following formula:

Statical from Q_{SW}:

$$\tau_{SW} = \frac{Q_{SW} \cdot S_y(z)}{I_y \cdot t} \cdot (0.5 - \alpha) \quad \left[N/mm^2\right]$$

Dynamical from Q_{WV}:

$$\tau_{WV} = \frac{Q_{WV} \cdot S_y(z)}{I_y \cdot t} \cdot (0.5 - \alpha) \quad \left[N/mm^2\right]$$

$S_y(z)$ = First moment of the sectional area considered [m^3], above or below, respectively, the level z considered, and related to the horizontal neutral axis.

t = Thickness of side shell plating respectively of the longitudinal bulkhead considered [mm]

α = 0 for ships without longitudinal bulkheads

If two longitudinal bulkheads are arranged:

α = $0.16 + 0.08 \cdot A_S/A_L$ for the longitudinal bulkheads

α = $0.34 - 0.08 \cdot A_S/A_L$ for the side shell

A_S = Area of cross section of the shell within depth **H** [m^2]

A_L = Area of cross section of longitudinal bulkhead within the depth **H** [m^2].

For ships of normal shape and construction, the ratio S_y/I_y determined for the midship section can be used for all cross sections.

3.2 Shear stress due to horizontal shear forces

3.1 is to be applied to correspondingly.

3.3 Shear stresses due to horizontal moments

Statical from M_{STmax}:

For a distribution of the torsional moments according to B.2.2.2, the stresses can be calculated as follows:

$$\tau_{ST} = 0.65 \cdot C_{Tor} \cdot M_{STmax} \cdot \frac{S_{\omega i}}{I_\omega \cdot t_i} \quad \left[N/mm^2\right]$$

C_{Tor} = According to D.2.3.2

M_{STmax} = According to B.2.2.2

M_{WTmax} = According to B.3.5

I_ω = According to D.2.3.2

$S_{\omega i}$ = Statical sector moment [m^4] of the structure considered

t_i = Thickness [mm] of the plate considered

For other distribution the stresses have to be determined by direct calculations.

Dynamical from M_{WTmax}:

$$\tau_{WT} = C_{Tor} \cdot M_{WTmax} \cdot \frac{S_{\omega i}}{I_\omega \cdot t_i} \quad \left[N/mm^2\right]$$

E. Permissible Still Water Bending Moments

1. Vertical Bending Moments

The permissible still water bending moments according to B.2.1 for any section within the length **L** are to be determined by the following formulae:

M_{SW} = $M_T - f_c \cdot M_{WV}$ [kNm]

f_c = Dynamic impact factor

f_c = 1

= 0.8 ; damaged case

= 0.5 ; Offshore terminal conditions

= 0.1 ; Harbor conditions

From the following two values for M_T:

$$M_T = \sigma_D \cdot W_{D(a)} \cdot 10^3 \frac{1}{f_r} \quad [kNm]$$

or

$$M_T = \sigma_B \cdot W_{B(a)} \cdot 10^3 \frac{1}{f_r} \quad [kNm]$$

the smaller value is to be taken.

W_D = Actual section modulus in the deck [m^3]

W_B = Actual section modulus in the bottom [m^3]

σ_D, σ'_D = Longitudinal bending stress [N/mm^2] for the ship's upper girder

= $\sigma_{SW} + \sigma_{WV}$

σ_B = Longitudinal bending stress [N/mm^2] for the ship's upper girder

= $\sigma_{SW} + \sigma_{WV}$

σ_{SW}, σ_{WV} longitudinal stress according to D.2.

f_r = 1.0 (in general).

= According to F.2 for ships with large deck openings

In the range between x/**L** = 0.3 and x/**L** = 0.7 the permissible still water bending moment shall generally not exceed the value obtained for x/**L** = 0.5.

2. Vertical Shear Forces

The permissible still water shear forces according to B.2.1 for any cross section within the length **L** are to be determined.

By the following formula:

$$Q_{SW} = Q_T - f_c \cdot Q_{WV} \quad [kN]$$

Q_T = Permissible total shear force in [kN], for which the permissible shear stress $\tau = \tau_{SW} + \tau_{WV}$ will be reached but not exceeded at any point of the section considered.

τ = Permissible shear stress [N/mm^2]

Q_{WV} = According to B.3.2

For dynamic impact factor f_c, see 1.

For harbor and offshore terminal conditions, see 1.

2.1 Correction of Still Water Shear Force Curve

In case with empty cargo holds, the conventional shear force curve may be corrected according to the direct load transmission by the longitudinal bottom structure at the transverse bulkheads. See also Fig. 6.9

2.2 The supporting forces of the bottom grillage at the transverse bulkheads may either be determined by direct calculation or by approximation, according to 2.3

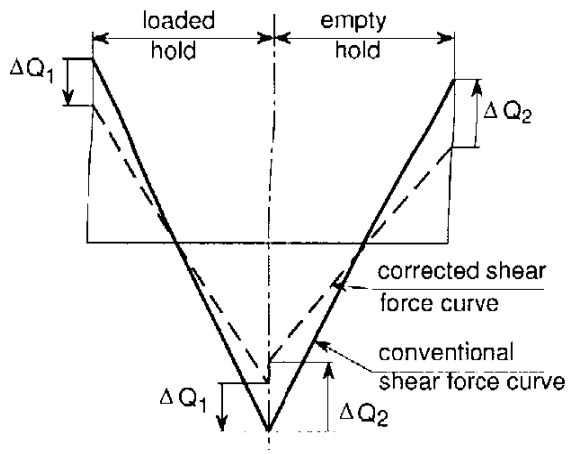

Figure 6.9 Correction of shear force curve

2.3 The sum of the supporting forces of the bottom grillage at the aft or forward boundary bulkhead of the hold considered may be determined by the following formula

$$\Delta Q = u \cdot P - v \cdot T^* \quad [kN]$$

P = Mass of cargo or ballast in [t] in the hold considered, including any contents of bottom tanks within the flat part of the double bottom

T* = Draught in [m] at the center of the hold

u, v = Correction coefficients for cargo and buoyancy as follows:

u = $\frac{10 \cdot \kappa \cdot \ell \cdot b \cdot h}{V}$ [kN/t]

v = $10 \cdot \kappa \cdot \ell \cdot b$ [kN/m]

κ = $\frac{B}{2.3 \cdot (B + \ell)}$

ℓ = Length of the flat part of the double bottom in [m]

b = Breadth of the flat part of the double bottom in [m]

h = Height of the hold in [m]

V_H = Volume of the hold in [m^3].

3. Static Torsional Moments

The permissible static torsional moments have to be determined according to D.1.

3.1 For ships with torsional moments according to B.2. it has to be proved by means of the loading computer, that the maximum permissible values are exceeded at no location. Excess values are permissible, if the actual torsional moments at the adjacent calculation points are correspondingly less than the permissible values.

Unless shown by a particular proof, during loading and unloading the static torsional moments shall not be higher than 75 % of the wave induced torsional moment according to B.3.5.

F. Ships with Large Deck Openings

1. General

1.1 From the displacement of the ship's upper girder, additional bending moments and forces are resulting in the deck girders around its vertical axes. After consultation with **TL** the stresses resulting from that have to be calculated for the longitudinal and transverse girders and to be taken into account for the dimensioning. The calculation of these stresses can be dispensed with, if the guidance values according to 2. and 3. are observed.

1.2 A ship is regarded as one with large deck openings if one of the following conditions applies to one or more hatch openings:

$$\frac{b_L}{B_M} > 0.6$$

$$\frac{\ell_L}{\ell_M} > 0.7$$

b_L = Breadth of hatchway, in case of multi-hatchways, b_L is the sum of the individual hatchway-breadths (Fig.6.10)

ℓ_L = Length of hatchway (Fig.6.10)

B_M = Breadth of deck measured at the mid length of hatchway (Fig.6.10)

ℓ_M = Distance between centers of transverse deck strips at each end of hatchway. Where there is no further hatchway beyond the one under consideration, ℓ_M will be specially considered. (Fig.6.10)

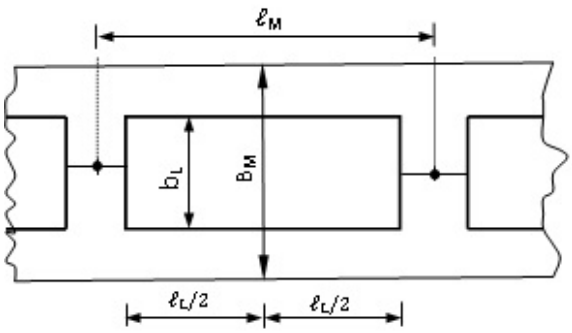

Figure 6.10 Scantling of hatch opening

2. Guidance Values for the Determination of the Section Modulus

The section moduli of the transverse sections of the ship are to be determined according to C.

f_r is selected according to Figure 6.11.

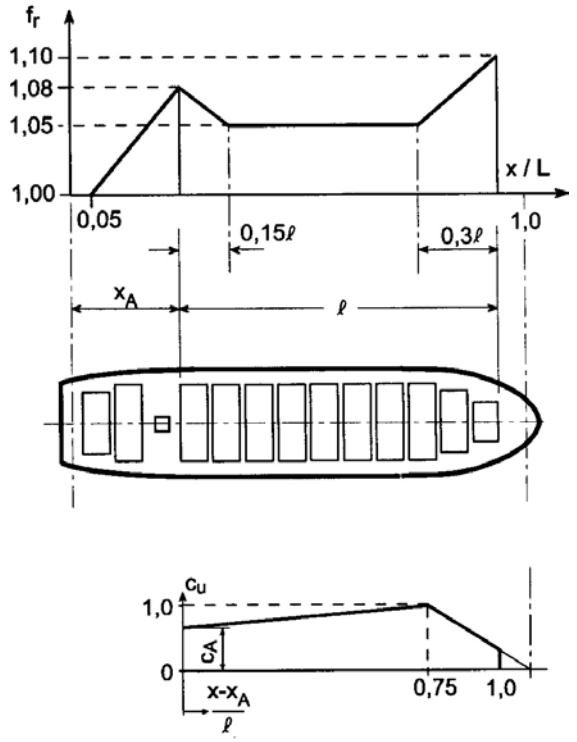

Figure 6.11 Correction factor f_r and distribution factor C_u

3. Guidance Values for the Design of Transverse Box Girders of Container Ships

The scantlings are to be determined by using the following design criteria:

- Support forces of hatch covers, see Section 8, D.
- Support forces of the containers stowed in the hold place (e.g. due to longitudinal acceleration)
- Stresses due to the torsional deformations of the hull
- Stresses resulting from the water pressure, if the transverse box girder forms part of a watertight bulkhead see Section 11.

In general the plate thickness shall not be less than obtained from the following formula see also Fig. 6.12:

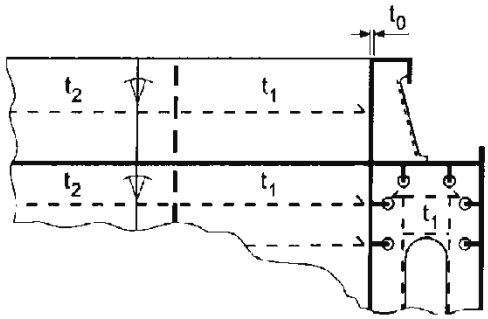

Figure 6.12 Joint of the transverse box girder

$$t_1 = \sqrt{L} \quad [mm]$$

or

$$t_1 = 0.5 \cdot t_0 \quad [mm]$$

t_0 = Thickness of longitudinal hatch coaming or of the uppermost strake of the longitudinal bulkhead

$$t_2 = 0.85 \cdot \sqrt{L} \quad [mm]$$

or

$$t_2 = 12 \cdot a \quad [mm]$$

a = Spacing of stiffeners in [m].

The larger of the values t_1 or t_2 is to be taken.

L need not be taken greater than 200 m.

For coamings on the open deck see also Section 8,D.

4. Guidance Values for the Displacement of the Upper Girder of the Ship

In general, the relative displacement Δu between the ship sides is to be determined by direct calculations. For the dimensioning of hatch cover bearings and seals, the following value may be used for the displacement:

$$\Delta u = \frac{6}{10^5} \cdot \left(M_{STmax} + M_{WTmax}\right) \cdot \left(1 - \frac{L}{450}\right) \cdot \left[4 + 0.1\frac{L^2}{B^2}\right] \cdot c_u + 20 \quad [mm]$$

M_{STmax}, M_{WTmax} acc. to B.2.2.2 or B.3.5, respectively

c_u = Distribution factor according to Fig. 6.11.

c_A = Value for c_u at the aft part of the open region, see also Fig. 6.11

$$= \left(1.25 - \frac{L}{400}\right) \cdot \left(1.6 - \frac{3 \cdot x_A}{L}\right) \leq 1.0$$

x_A = According to D.2.3.1 for x_A no smaller value than 0.15 **L** and no greater value than 0.3 **L** is to be taken

G. Longitudinal Strength of Hull Girder in Flooded Condition for Non-CSR Bulk Carriers

1. General

Requirements of G are to be applied to non-CSR bulk carriers of 150 m in length and upwards, intending to carry solid bulk cargoes having a density of 1,0 t/m^3 or above, and with,

- Single side skin construction, or
- Double side skin construction in which any part of longitudinal bulkhead is located within B/5 or 11.5 m, whichever is less, inboard from the ship's side at right angle to the centreline at the assigned summer load line

Such ships are to have their hull girder strength checked for specified flooded conditions, in each of the cargo and ballast loading conditions defined in Section 26 B.2 (Standard Loading Conditions), Section 6 H.3.1.1 (Partially filled ballast tanks in ballast loading Conditions), H.3.1.2 (Partially filled ballast tanks in combination with cargo loading conditions) and in every other condition considered in the intact longitudinal strength calculations, including those according to Section 6 and Section 27 B.10, except that harbour

conditions, docking condition afloat, loading and unloading transitory conditions in port and loading conditions encountered during ballast water exchange need not be considered.

These requirements do not apply to CSR Bulk Carriers.

The required moment of inertia according to C.3 and the strength of local structural members are excluded from this proof.

For accessibility see Section 1.

2. Flooding Criteria

To calculate the weight of ingressed water, the following assumptions are to be made:

- For the permeability of empty cargo spaces and volume left in loaded cargo spaces, see Section 26, E.6.
- Appropriate permeabilities and bulk densities are to be used for any cargo carried. For iron ore, a minimum permeability of 0.3 with a corresponding bulk density of 3.0 t/m^3 is to be used. For cement, a minimum permeability of 0.3 with a corresponding bulk density of 1.3 t/m^3 is to be used. In this respect, permeability for solid bulk cargo means the ratio of the floodable volume between the cargo parts to the gross volume of the bulk cargo.
- For packed cargo conditions (such as steel mill products), the actual density of the cargo should be used. For the permeability has to be harmonized case by case with **TL** except for the case given in Section 26.

3. Flooding Conditions

Each cargo hold is to be considered individually flooded up to the equilibrium waterline. This does not apply for cargo holds of double hull construction where the

double hull spacing exceeds 1000 mm, measured vertically to the shell at any location of the cargo hold length.

The wave induced vertical bending moments and shear forces in the flooded conditions are assumed to be equal to 80% of the wave loads, as given in B.3.1 and B.3.2.

H. Loading Guidance Information

1. General, Definitions

1.1 A loading guidance information is a means in accordance with Regulation 10 (1) of **ICLL 66.** which enables the master to load and ballast the ship in a safe manner without exceeding the permissible stresses.

1.2 An approved loading manual is to be supplied for all ships except those of Category II with length less than 90 m in which the deadweight does not exceed 30 % of the displacement at the summer loadline.

In addition, an approved loading instrument is to be supplied for all ships of Category I of 100 m. in length and above. In special cases, e.g. extreme loading conditions or unusual structural configurations, **TL** may also require an approved loading instrument for ships of Category I less than 100 m. in length. Special requirements for bulk carriers, ore carriers and combination carriers are given in Section 27.

1.3 The following definitions apply:

A loading manual is a document which describes:

- The loading conditions on which the design of the ship has been based, including permissible limits of still water bending moment and shear force and shear force correction values and, where applicable, permissible limits related to still water torsional moment and lateral loads.

- The result of the calculations of still water bending moments, shear forces and where applicable, limitations due to torsional and lateral loads, see also E;

- The allowable local loading for hatch covers, decks, double bottom, etc.

A loading instrument is **(1)** an approved analog or digital instrument consisting of

- Loading computer (hardware), and

- Loading program (software)

by means of which it can be easily and quickly ascertained that, at specified read-out points, the still water bending moments, shear forces, and the still water torsional moments and lateral loads, where applicable, in any load or ballast condition will not exceed the specified permissible values.

An approved operational manual is always to be provided for the loading instrument. The operational manual is to be approved.

Loading computers must be type tested and certified, see also 5.1. Type approved hardware may be waived, if redundancy is ensured by a second certified loading instrument. Type approval is required if

- The computers are installed on the bridge or in adjacent spaces

- Interfaces to other systems of ship operation are provided.

For type approval the relevant rules and guidelines are to be observed.

Loading programs must be approved and certified, see also 4.1 and 5.2. Single point loading programs are not acceptable.

Ship categories for the purpose of this paragraph are defined for all classed seagoing ships of 65 m. in length and above which are contracted for construction on or after 1st July 1998 as follows:

---

(1) *For definition of whole loading computer system, which may consist of further modules e.g. stability computer according to IACS UR L5, see **TL** Rules Hull, Section 26.*

Category I Ships:
Ships with large deck openings where, according to F., combined stresses due to vertical and horizontal hull girder bending and torsional and lateral loads have to be considered.

Ships liable to carry non-homogeneous loadings, where the cargo and/or ballast may be unevenly distributed.

Ships less than 120 meters in length, when their design takes into account uneven distribution of cargo or ballast, belong to Category II.

Chemical tankers and gas carriers.

Category II Ships:
Ships with arrangement giving small possibilities for variation in the distribution of cargo and ballast (e.g. passenger vessels) and ships on regular and fixed trading patterns where the loading manual gives sufficient guidance, and in addition those exceptions given under Category I.

2. Conditions of Approval of Loading Manuals

The approved loading manual is to be based on the final data of the ship. The manual is to include the design loading and ballast conditions upon which the approval of the hull scantlings is based.

Paragraph A.2.3 and Section 26 contain a list of the loading conditions which normally are to be included in the loading manual.

In case of modifications implying changes in the main data of the ship, a new loading manual is to be issued approved.

The loading manual must be prepared in a language understood by the users, if this language is not English, a translation into English is to be included.

3. Design Cargo and Ballast Loading Conditions

3.1 In general the loading manual should contain the design loading and ballast conditions, subdivided into departure and arrival conditions and where applicable, ballast exchange at sea conditions upon which the approval of the hull scantlings is based.

Where the amount and disposition of consumables at any transitory stage of the voyage are considered to result in a more severe loading condition, calculations for such transitory conditions are to be submitted in addition to those for departure and arrival conditions.

Also, where any ballasting and/or deballasting is intended during voyage, calculations of the transitory conditions before and after ballasting and/or deballasting any ballast tank are to be submitted and, after approval, included in the loading manual for guidance.

3.1.1 Partially filled ballast tanks in ballast loading conditions

Ballast loading conditions involving partially filled peak and/or other ballast tanks at departure, arriving or during transitory conditions are not permitted to be considered as design conditions, unless

- Design stress limits are not exceeded in all filling levels between empty and full;

- For bulk carriers, where applicable, the requirements of G. are complied with for all filling levels between empty and full

To demonstrate compliance with all filling levels between empty and full, it will be acceptable if, in each condition at departure, arrival and where required by A, 2.3 and section 26 any intermediate condition, the tanks intended to be partially filled are assumed to be:

- Empty,

- Full,

- Partially filled at intended level.

Where multiple tanks are intended to be partially filled, all combinations of empty, full or partially filled at intended level for those tanks are to be investigated.

However, for conventional ore carriers with large wing water ballast tanks in cargo area, where empty or full ballast water filling levels of one or maximum two pairs of these tanks lead to the ship's trim exceeding one of the following conditions, it is sufficient to demonstrate compliance with maximum, minimum and intended partial filling levels of these one or maximum two pairs of ballast tanks such that the ship's condition does not exceed any of these trim limits.

Filling levels of all other wing ballast tanks are to be considered between empty and full.

The trim conditions mentioned above are:

- Trim by stern of 0.03 **L**, or
- Trim by bow of 0.015 **L**, or
- Any trim that can not maintain propeller immersion (I/D) not less than 25% (See Figure 6.13)

I = The distance from propeller centerline to the waterline

D = Propeller diameter

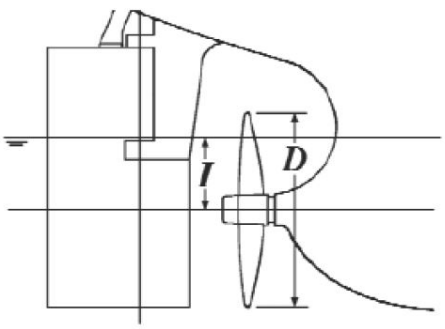

Figure 6.13 Propeller Immersion

The maximum and minimum filling levels of the above mentioned pairs of side ballast tanks are to be indicated in the loading manual.

3.1.2 Partially filled ballast tanks in combination with cargo loading conditions

In such cargo loading conditions, the requirements in 3.1.1 apply to the peak tanks only.

Requirements of 3.1.1 and 3.1.2 are not applicable to ballast water exchange using the sequential method. However, bending moment and shear force calculations for each (reasonable, scantling determining) deballasting or ballasting stage in the ballast water exchange sequence are to be included in the loading manual or ballast water management plan of any vessel that intends to employ the sequential ballast water exchange method.

4. Conditions of Approval for Loading Instruments

4.1 The approval of the loading instrument is to include:

- Verification of type approval, see 1.3.
- Verification that the final ship data have been used,
- Acceptance of number and position of read-out points,
- Acceptance of relevant limits for all read-out points,
- Checking of proper installation and operation of the instrument on board and that a copy of the approved operation manual is available.

4.2 Paragraph 5 contains information on approval procedures for loading instruments. **(2)**

4.3 In case of modifications implying changes in the main ship data, the loading instrument is to be modified accordingly and to be newly approved.

4.4 The operation manual and the instrument output must be prepared in a language understood by the users. If this language is not English, a translation into English is to be included.

---

(2) *For details see IACS Recomendation 48, **TL** Rules, Hull, Section 26.*

4.5 The operation of the loading instrument is to be verified upon installation. It is to be checked that approved test conditions and the operation manual for the instrument are available on board.

The permissible limits for the still water bending moments and shear forces to be applied for the ballast water exchange at sea are to be determined in accordance with E. For the wave bending moments B.3.1 and for the wave shear forces B.3.2 are to be used.

5. Approval Procedures of Loading Instruments

5.1 Type test of the loading computer

The type test requires:

- The loading computer to undergo successful tests in simulated conditions to prove is suitability for shipboard operation,
- The testing of a design may be waived if a loading instrument has been tested and certified by an independent and recognized authority, provided the testing program and result are considered satisfactory.

5.2 Certification of the loading program

5.2.1 After the successful type test of the hardware the producer of the loading program must ask **TL** for certification.

5.2.2 The number and location of read-out points are to be to the satisfaction of the **TL**.

Read-out points shall be usually selected at the positions of the transverse bulkheads or other obvious boundaries. Additional read-out points may be required between bulkheads of long holds/tanks.

5.2.3 The **TL** will specify:

- The maximum permissible still water shear forces, bending moments (limits) at the agreed read-out points-when applicable, the shear force correction factors at the transverse bulkheads,
- When applicable, the maximum permissible torsional moment,
- Also when applicable the maximum lateral load.

5.2.4 For approval of the loading program the following documents have to be submitted:

- Operation manual for the loading program,
- Print-outs of the basic ship data like distribution of light ship weight, tank and hold data, etc.
- Print-outs of at least 4 test conditions,
- Discettes with loading program and stored test conditions.

The calculated strength results at the fixed read-out points must not differ from the results of the test conditions by more than 5% related to the approved limits.

5.3 Final approval of the instrument will be granted when the accuracy of the instrument has been checked in the presence of the Surveyor after installation on board ship using the approved test conditions.

If the performance of the instrument is found satisfactory, during the installation test on board, the certificate issued by **TL** Head Office and handed over on board will become valid. The Installation Test Report should be stamped and signed by the Master.

During the next six months after the issue of certificate, the Installation Test Report has to be checked by **TL** surveyor. He has to stamp and sign it, if all documents are available on board, the Installation Onboard Test has been carried out satisfactorily and the system is running without any problem.

6. Class Maintenance of Loading Guidance Information

At each Annual and Class Renewal Survey, it is to be checked that the approved loading guidance information is available on board.

The loading instrument is to be checked for accuracy at regular intervals by the ship's Master by applying test loading conditions.

At each Class Renewal Survey this checking is to be done in the presence of the Surveyor

I. Longitudinal Strength Standard for Container Ships

1. General

1.1 Application

1.1.1 Scope

This section applies to the following types of steel ships with a length L of 90 m and greater and operated in unrestricted service

1. Container ships

2. Ships dedicated primarily to carry their load in containers.

1.1.2 Load limitations

The wave induced load requirements apply to monohull displacement ships in unrestricted service and are limited to ships meeting the following criteria:

(i) Length 90 m ≤ L ≤ 500 m

(ii) Proportion 5 ≤ L/B ≤ 9 2 ≤ B/T ≤ 6

(iii) Block coefficient at scantling draught

$0.55 \leq C_B \leq 0.9$

For ships of length 290 m or above, Global Analysis is to be carried out.(See also Additional Rule for Longitudinal Strength Assessment of Container Ships, F)

For ships of length 150 m or above, Cargo Hold Analysis is to be carried out. (See also Additional Rule for Longitudinal Strength Assessment of Container Ships, F)

For ships that do not meet all of the aforementioned criteria, special considerations such as direct calculations of wave induced loads may be required by **TL**.

1.1.3 Longitudinal Extent of Strength Assessment

The stiffness, yield strength, buckling strength and hull girder ultimate strength assessment are to be carried out in way of 0.2L to 0.75L with due consideration given to locations where there are significant changes in hull cross section, e.g. changing of framing system and the fore and aft end of the forward bridge block in case of two-island designs.

In addition, strength assessments are to be carried out outside this area. As a minimum assessments are to be carried out at forward end of the foremost cargo hold and the aft end of the aft most cargo hold. Evaluation criteria used for these assessments are determined by **TL**.

1.1.4 Use of extremely thick steel plates

When using of extremely thick steel plates (50 mm and greater), requirements in TL Part A, Chapter 2, Section 3,J.2 are to be taken into consideration.

1.2 Symbols and Definitions

1.2.1 Symbols

L = Rule length, in m, as defined in Section 1

B = Moulded breadth, in m, as defined in Section 1

C_P = Wave parameter, see 2.3.1

T = Scantling draught, in m, as defined in Section 1

C_{WPL} = Waterplane coefficient at scantling draught, to be taken as:

$$C_w = \frac{A_w}{(LB)}$$

A_W = Waterplane area at scantling draught, in m^2

R_{eH} = Specified minimum yield stress of the material, in N/mm^2

E = Young's modulus in N/mm^2 to be taken as $E = 2.06*10^5$ N/mm^2 for steel

M_{SWmax}, M_{SWmin} = Permissible maximum and minimum vertical still water bending moments in seagoing condition, in kNm, at the cross section under consideration, see 2.2.2

Q_{SWmax}, Q_{SWmin} = Permissible maximum and minimum still water vertical shear force in seagoing condition, in kN, at the cross section under consideration, see 2.2.2

q_v = Shear flow along the cross section under consideration, to be determined according to Additional Rule for Longitudinal Strength Assessment of Container Ships, C

$f_{NL\text{-}Hog}$ = Non-linear correction factor for hogging, see 2.3.2

$f_{NL\text{-}Sag}$ = Non-linear correction factor for sagging, see 2.3.2

f_R = Factor related to the operational profile, see 2.3.2

t_{net} = Net thickness, in mm, see Additional Rule for Longitudinal Strength Assessment of Container Ships, B

t_{res} = Reserve thickness, to be taken as 0.5mm, see Additional Rule for Longitudinal Strength Assessment of Container Ships, B

I_{net} = Net vertical hull girder moment of inertia at the cross section under consideration, to be determined using net scantlings as defined in Additional Rule for Longitudinal Strength Assessment of Container Ships, B, in m^4

σ_{HG} = Hull girder bending stress, in N/mm^2, as defined in 2.5

τ_{HG} = Hull girder shear stress, in N/mm^2, as defined in 2.5

x = Longitudinal co-ordinate of a location under consideration, in m

z = Vertical co-ordinate of a location under consideration, in m

z_n = Distance from the baseline to the horizontal neutral axis, in m.

1.2.2 Fore end and aft end

The fore end (FE) of the rule length L, see Figure 6.14, is the perpendicular to the scantling draught waterline at the forward side of the stem.

The aft end (AE) of the rule length L, see Figure 6.14, is the perpendicular to the scantling draught waterline at a distance L aft of the fore end (FE).

2. Loads

2.1 Sign convention for hull girder loads

The sign conventions of vertical bending moments and vertical shear forces at any ship transverse section are as shown in Figure 6.15, namely:

- The vertical bending moments M_{SV} and M_{WV} are positive when they induce tensile stresses in the strength deck (hogging bending moment) and negative when they induce tensile stresses in the bottom (sagging bending moment).

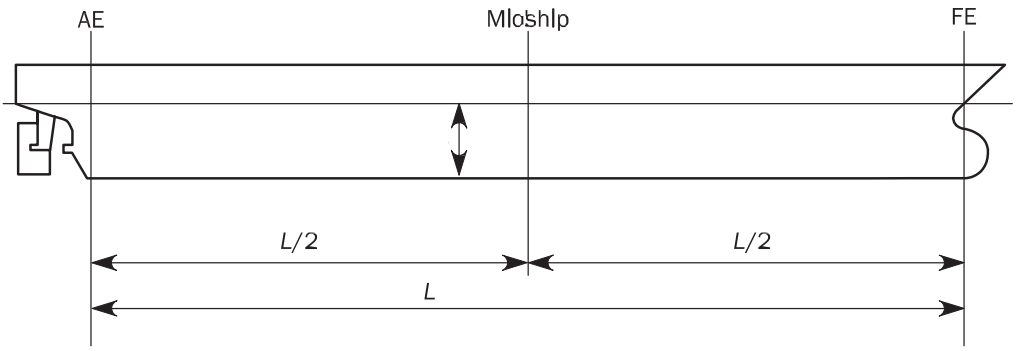

Figure 6.14 Ends of length L

- The vertical shear forces Q_{SW}, Q_{WV} are positive in the case of downward resulting forces acting aft of the transverse section and upward resulting forces acting forward of the transverse section under consideration. The shear forces in the directions opposite to above are negative

2.2 Still Water Bending Moments and Shear Forces

2.2.1 General

Still water bending moments, M_{SW} in kNm, and still water shear forces, Q_{SW} in kN, are to be calculated at each section along the ship length for design loading conditions as specified in 2.2.2.

2.2.2 Design Loading Conditions

In general, the design cargo and ballast loading conditions, based on amount of bunker, fresh water and stores at departure and arrival, are to be considered for the M_{SW} and Q_{SW} calculations. Where the amount and disposition of consumables at any intermediate stage of the voyage is considered more severe, calculations for such intermediate conditions are to be submitted in addition to those for departure and arrival conditions. Also, where any ballasting and/or de-ballasting is intended during voyage, calculations of the intermediate condition just before and just after ballasting and/or de-ballasting any ballast tank are to be submitted and where approved included in the loading manual for guidance.

The permissible vertical still water bending moments M_{SWmax} and M_{SWmin} and the permissible vertical still water shear forces Q_{SWmax} and Q_{SWmin} in seagoing conditions at any longitudinal position are to envelop:

- The maximum and minimum still water bending moments and shear forces for the seagoing loading conditions defined in the Loading Manual.

- The maximum and minimum still water bending moments and shear forces specified by the designer

The Loading Manual should include the relevant loading conditions, which envelop the still water hull girder loads for seagoing conditions, including those specified in Section 6, H.2.

2.3 Wave loads

2.3.1 Wave Parameter

The wave parameter is defined as follows

$$C_P = 1 - 1.50\left(1 - \sqrt{\frac{L}{L_{ref}}}\right)^{2.2} \quad \text{for } L \le L_{ref}$$

$$C_P = 1 - 0.45\left(\sqrt{\frac{L}{L_{ref}}} - 1\right)^{1.7} \quad \text{for } L > L_{ref}$$

where :

L_{ref} = Reference length, in m, taken as

L_{ref} = $315C_{WPL}^{-1.3}$ for the determination of vertical wave bending moments according to 2.3.2

L_{ref} = $330C_{WPL}^{-1.3}$ for the determination of vertical wave shear forces according to 2.3.3

2.3.2 Vertical Wave Bending Moments

The distribution of the vertical wave induced bending moments, M_W in kNm, along the ship length is given in Figure 6.17, where:

$$M_{W-Hog} = +1.5 f_R L^3 C_P C_W \left(\frac{B}{L}\right)^{0.8} f_{NL-Hog}$$

$$M_{W-Sag} = -1.5 f_R L^3 C_P C_W \left(\frac{B}{L}\right)^{0.8} f_{NL-Sag}$$

where :

f_R: = Factor related to the operational profile, to be taken as:

f_R = 0.85

f_{NL-Hog}: Non-linear correction for hogging, to be taken as:

$$f_{NL-Hog} = 0.3\frac{C_B}{C_{WPL}}\sqrt{T}$$

not to be taken greater than 1.1

$$f_{NL-Sag} = 4.5\frac{1+0.2 f_{Bow}}{C_{WPL}\sqrt{C_B}L^{0.3}}$$

not to be taken greater than 1.1

f_{Bow}: = Bow flare shape coefficient, to be taken as

$$f_{Bow} = \frac{A_{DK} - A_{WL}}{0.2 L z_F}$$

A_{DK} = Projected area in horizontal plane of uppermost deck, in m^2 including the forecastle deck, if any, extending from 0.8L forward (see Figure 6.16). Any other structures, e.g. plated bulwark, are to be excluded

A_{WL} = Waterplane area, in m^2, at draught T, extending from 0.8L forward

z_f = Vertical distance, in m, from the waterline at draught *T* to the uppermost deck (or forecastle deck), measured at FE (see Figure 6.16). Any other structures, e.g. plated bulwark, are to be excluded

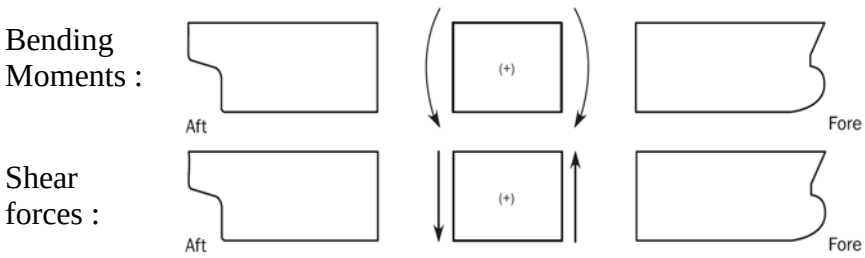

Figure 6.15 Sign conventions of bending moments and shear forces

2.3.3 Vertical wave shear force

The distribution of the vertical wave induced shear forces, F_W in kN, along the ship length is given in Figure 6.18, where

$$F_{W\,Hog}^{Aft} = +5.2 f_R L^2 C_p C_w (\frac{B}{L})^{0.8} (0.3 + 0.7 f_{NL-Hog})$$

$$F_{W\,Hog}^{Fore} = -5.7 f_R L^2 C_p C_w (\frac{B}{L})^{0.8} f_{NL-Hog}$$

$$F_{W\,Sag}^{Aft} = -5.2 f_R L^2 C_p C_w (\frac{B}{L})^{0.8} (0.3 + 0.7 f_{NL-Sag})$$

$$F_{W\,Sag}^{Fore} = +5.7 f_R L^2 C_p C_w (\frac{B}{L})^{0.8} (0.25 + 0.75 f_{NL-Sag})$$

$$F_W^{Mid} = +4.0 f_R L^2 C_p C_w (\frac{B}{L})^{0.8}$$

2.4 Load cases

For the strength assessment, the maximum hogging and sagging load cases given in Table 6.4 are to be checked. For each load case the still water condition at each section as defined in 2.2 is to be combined with the wave condition as defined in 2.3, refer also to Figure 6.19.

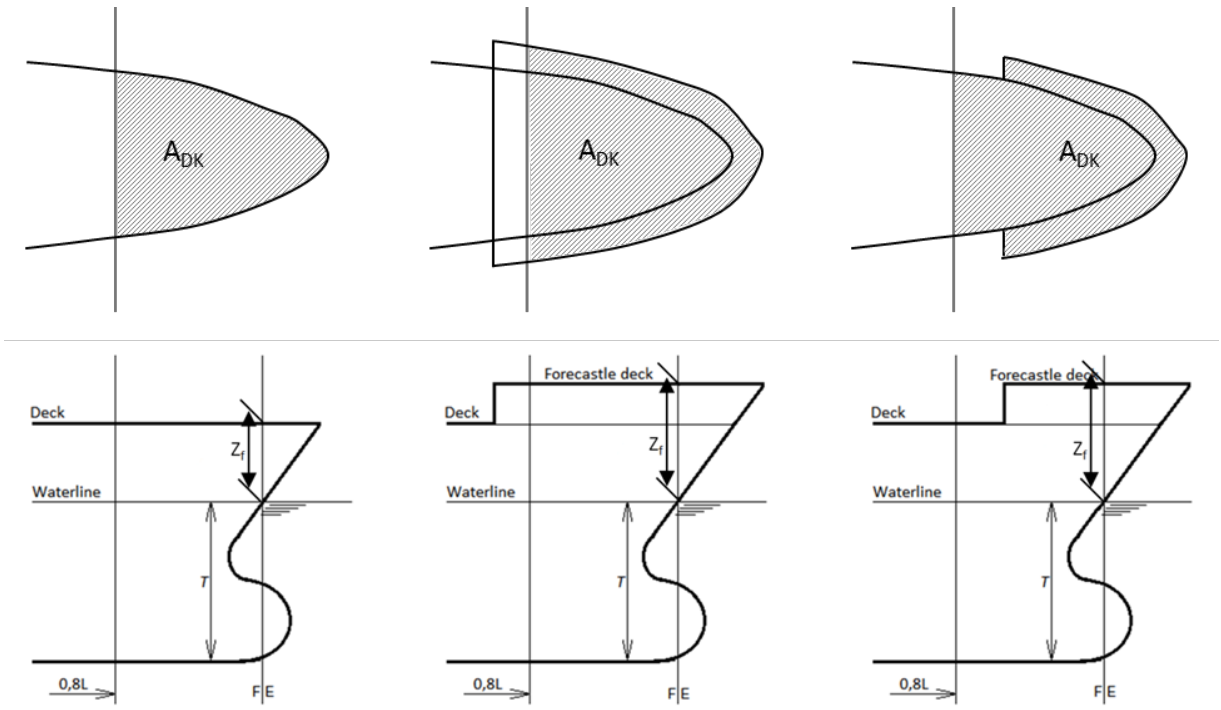

Figure 6.16 Projected area A_{DK} and vertical distance z_f

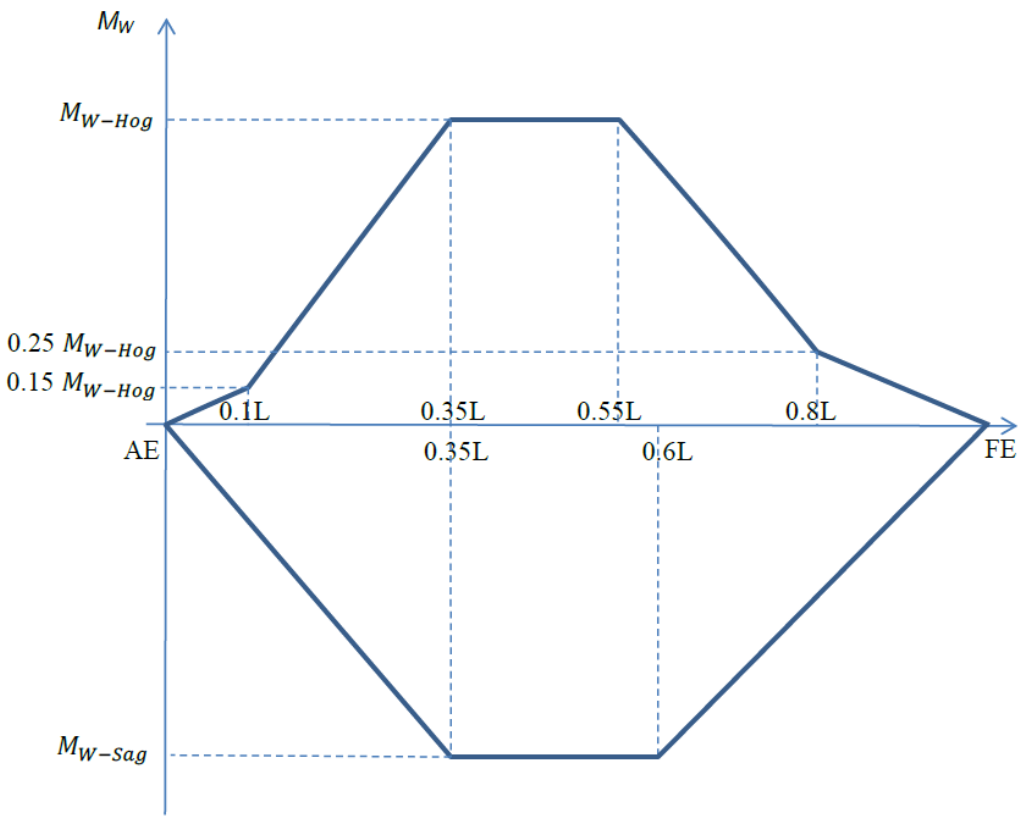

Figure 6.17 Distribution of vertical wave bending moment M_{WV} along the ship length

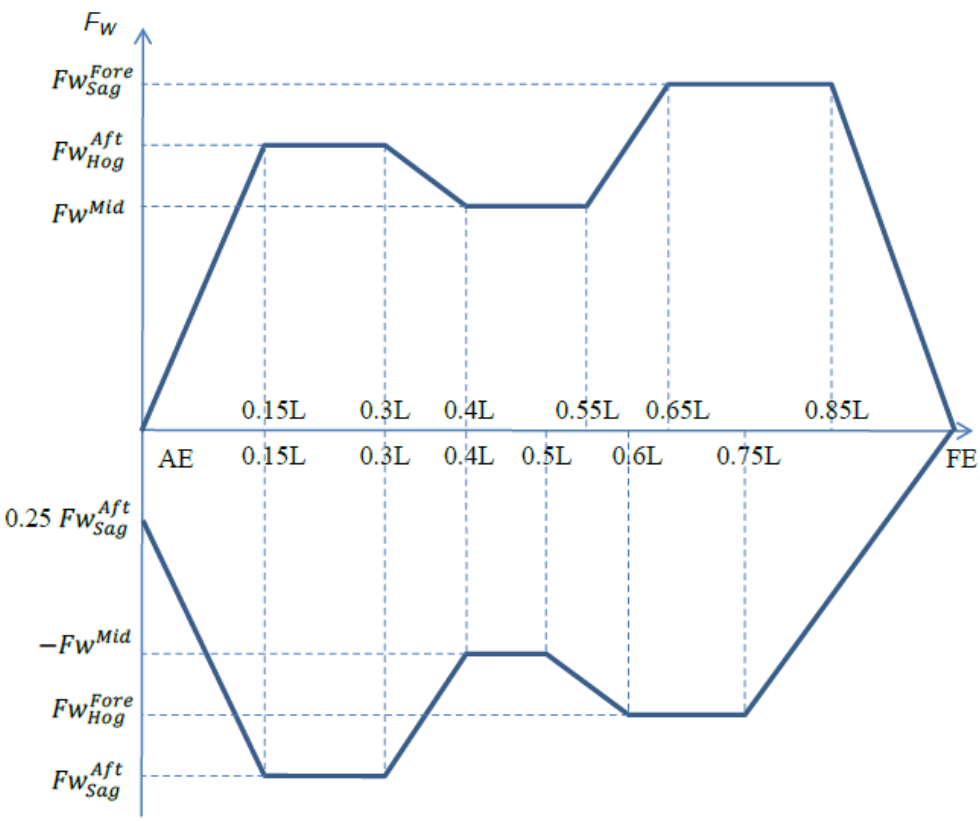

Figure 6.18 Distribution of vertical wave shear force Q_{WV} along the ship length

Table 6.4 Combination of still water and wave bending moments and shear forces

Load case	Bending moment		Shear force	
	M_{SW}	M_W	Q_{SW}	Q_{WV}
Hogging	M_{SWmax}	M_{WH}	F_{smax} for x ≤0.5L	F_{Wmax} for x ≤ 0.5L
			F_{smin} for x > 0.5L	F_{wmin} for x > 0.5L
Sagging	M_{SWmin}	M_{WS}	Fs_{min} for x ≤0.5L	F_{wmin} for x ≤ 0.5L
			F_{smax} for x > 0.5L	F_{wmax} for x > 0.5L

M_{WH} = Wave bending moment in hogging at the cross section under consideration, to be taken as the positive value of M_w as defined in Figure 6.17.

M_{ws} = Wave bending moment in sagging at the cross section under consideration, to be taken as the negative value of M_w as defined Figure 6.17.

Q_{WVmax} = Maximum value of the wave shear force at the cross section under consideration, to be taken as the positive value of F_W as defined Figure 6.18.

Q_{WVmin} = Minimum value of the wave shear force at the cross section under consideration, to be taken as the negative value of F_W as defined Figure 6.18.

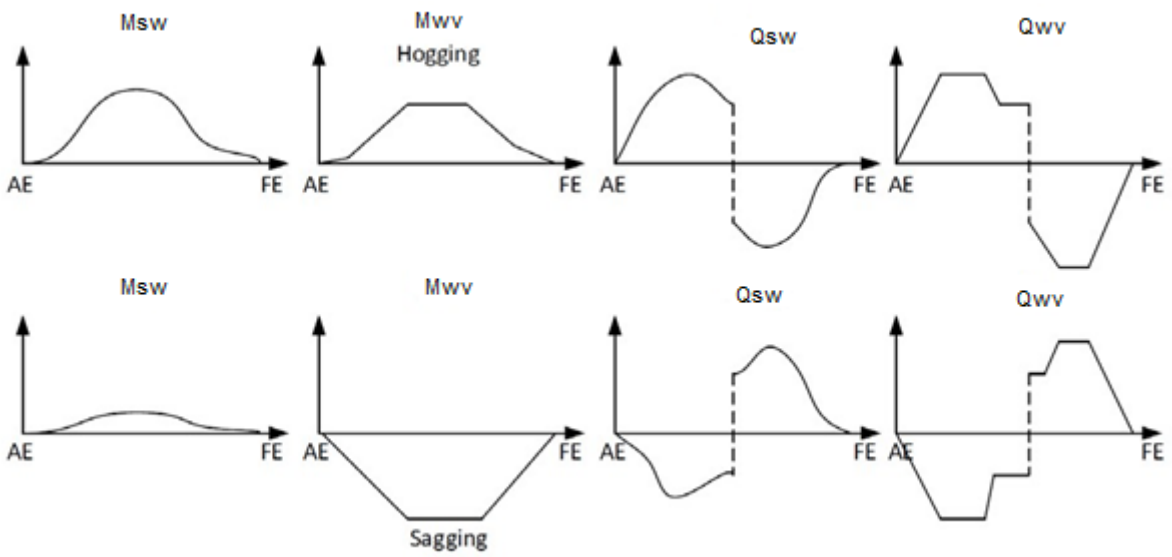

Figure 6.19 Load combination to determine the maximum hogging and sagging load cases as given in Table 6.4

2.5 Hull Girder Stress

The hull girder stresses in N/mm^2 are to be determined at the load calculation point under consideration, for the "hogging" and "sagging" load cases defined in 2.4 as follows:

Bending stress :

$$\sigma_{HG} = \frac{\gamma_S M_{SW} + \gamma_W M_{WV}}{I_{net}} (Z - Z_n) 10^{-3}$$

Shear stress :

$$\tau_{HG} = \frac{\gamma_S Q_{SW} + \gamma_W Q_{WV}}{t_{net}/q_v} 10^3$$

where:

γ_s, γ_W = Partial safety factors, to be taken as:

$\gamma_s = 1.0$

$\gamma_W = 1.0$

3. Strength Assessment

3.1 General

Continuity of structure is to be maintained throughout the length of the ship. Where significant changes in structural arrangement occur adequate transitional structure is to be provided.

3.2 Stiffness Criterion

The two load cases "hogging" and "sagging" as listed in 2.4 are to be checked. The net moment of inertia, in m^4, is not to be less than

$$I_{net} \geq 1.55 \mid M_{SW} + M_{WV} \mid 10^{-7}$$

3.3 Yield Strength Assessment

3.3.1 General Acceptance Criteria

The yield strength assessment is to check, for each of the load cases "hogging" and "sagging" as defined in 2.4, that the equivalent hull girder stress σ_{eq}, in N/mm^2, is less than the permissible stress σ_{perm}, in N/mm^2, as follows:

$$\sigma_{eq} < \sigma_{perm}$$

Where :

$$\sigma_{eq} = \sqrt{\sigma_x^2 + 3\tau^2}$$

$$\sigma_{perm} = \frac{R_{eH}}{\gamma_1 \gamma_2}$$

γ_1 = Partial safety factor for material, to be taken as

$$\gamma_1 = \kappa \frac{R_{eH}}{235}$$

γ_2 = Partial safety factor for load combinations and permissible stress, to be taken as

- γ_2 = 1.24, for bending strength assessment according to 3.3.2.
- γ_2 = 113, for shear stress assessment according to 3.3.3.

3.3.2 Bending strength assessment

The assessment of the bending stresses is to be carried out according to 3.3.1 at the following locations of the cross section:

- At bottom
- At deck
- At top of hatch coaming
- At any point where there is a change of steel yield strength

The following combination of hull girder stress as defined in 2.5 is to be considered:

$\sigma_x = \sigma_{HG}$

$\tau = 0$

3.3.3 Shear Strength Assessment

The assessment of shear stress is to be carried out according to 3.3.1 for all structural elements that contribute to the shear strength capability.

The following combination of hull girder stress as defined in 2.5 is to be considered

$\sigma_x = 0$

4. Buckling Strength

4.1 Application

These requirements apply to plate panels and longitudinal stiffeners subject to hull girder bending and shear stresses.

Definitions of symbols used in the present article item 4 are given in Additional Rule for Longitudinal Strength Assessment of Container Ships, D, "Buckling Capacity".

4.2 Buckling criteria

The acceptance criterion for the buckling assessment is defined as follows:

$\eta_{act} = \leq 1$

where:

η_{act} = Maximum utilisation factor as defined in 4.3.

4.3 Buckling utilisation factor

The utilization factor, η_{act} is defined as the inverse of the stress multiplication factor at failure γ_c see figure 6.20.

$$\eta_{act} = \frac{1}{\gamma_c}$$

Failure limit states are defined in:

- Additional Rule for Longitudinal Strength Assessment of Container Ships, D.2 for elementary plate panels,
- Additional Rule for Longitudinal Strength Assessment of Container Ships, D.3 for overall stiffened panels,
- Additional Rule for Longitudinal Strength Assessment of Container Ships, D.4 for longitudinal stiffeners.

Each failure limit state is defined by an equation, and γ_c is to be determined such that it satisfies the equation.

Figure 6.20 illustrates how the stress multiplication factor at failure γ_c, of a structural member is determined for any combination of longitudinal and shear stress. Where:

σ_x, τ = Applied stress combination for buckling given in 4.4.1

σ_c, τ_c = Critical buckling stresses to be obtained according to Additional Rule for Longitudinal Strength Assessment of Container Ships, D for the stress combination for buckling σ_x and τ .

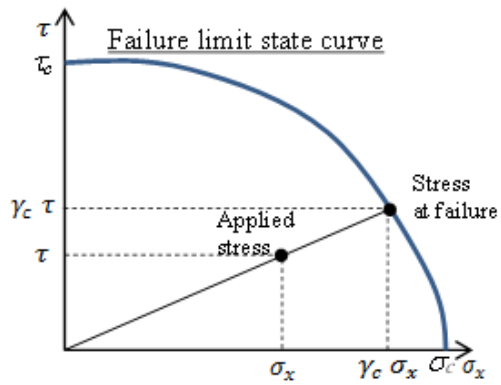

Figure 6.20 Example of failure limit state curve and stress multiplication factor at failure

4.4 Stress determination

4.4.1 Stress combinations for buckling assessment

The following two stress combinations are to be considered for each of the load cases "hogging" and

"sagging" as defined in 2.4. The stresses are to be derived at the load calculation points defined in 4.4.2

a) Longitudinal stiffening arrangement:

Stress combination 1 with:

$\sigma_x = \sigma_{HG}$

$\sigma_y = 0$

$\tau = 0{,}7\tau_{HG}$

Stress combination 2 with:

$\sigma_x = 0.7\ \sigma_{HG}$

$\sigma_y = 0$

$\tau = \tau_{HG}$

b) Transverse stiffening arrangement: Stress combination 1 with:

$\sigma_x = 0$

$\sigma_y = \sigma_{HG}$

$\tau = 0.7\ \tau_{HG}$

Stress combination 2 with

$\sigma_x = 0$

$\sigma_y = 0.7\ \sigma_{HG}$

$\tau = \tau_{HG}$

4.4.2 Load calculation points

The hull girder stresses for elementary plate panels (EPP) are to be calculated at the load calculation points defined in Table 6.5.

The hull girder stresses for longitudinal stiffeners are to be calculated at the following load calculation point:

- at the mid length of the considered stiffener.
- at the intersection point between the stiffener and its attached plate

5. Hull Girder Ultimate Strength

5.1 General

The hull girder ultimate strength is to be assessed for ships with length L equal or greater than 150m.

The acceptance criteria, given in 5.4 are applicable to intact ship structures.

The hull girder ultimate bending capacity is to be checked for the load cases "hogging" and "sagging" as defined in 2.4.

Table 6.5 Load calculation points (LCP) coordinates for plate buckling assessment

LCP coordinates	Hull girder bending stress		Hull girder shear stress
	Non horizontal plating	Horizontal plating	
x coordinate	Mid-length of the EPP		
y coordinate	Both upper and lower ends of the EPP (points A1 and A2 in Figure 6.21)	Outboard and inboard ends of the EPP (points A1 and A2 in Figure 6.21)	Mid-point of EPP (point B in Figure 6.21)
z coordinate	Corresponding to *x* and *y* values		

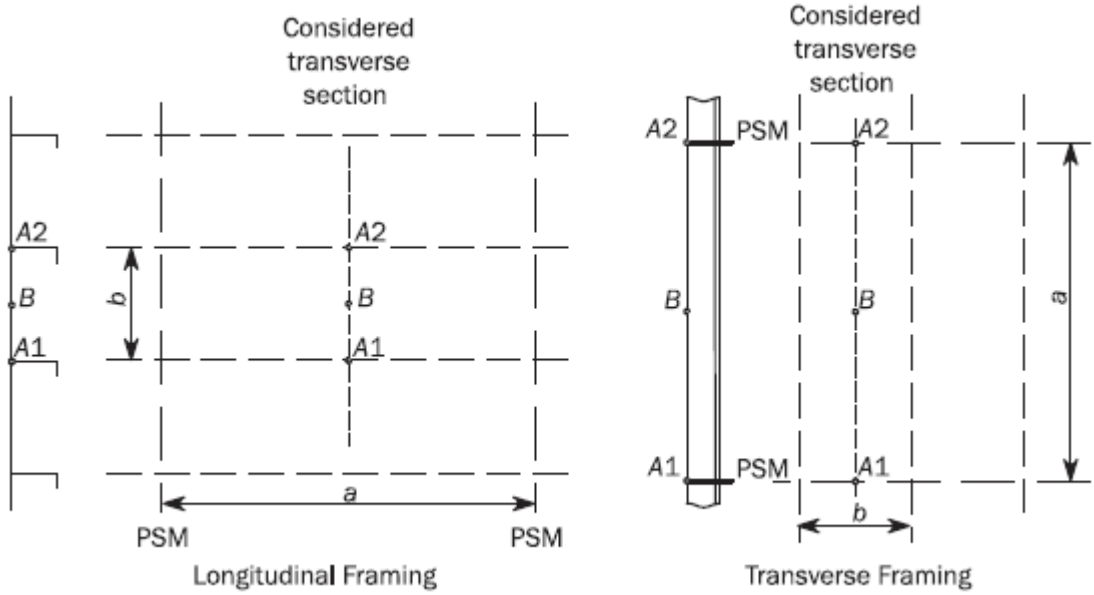

Figure 6.21 LCP for plate buckling – assessment, PSM stands for primary supporting members

5.2 Hull girder ultimate bending moments

The vertical hull girder bending moment, M in hogging and sagging conditions, to be considered in the ultimate strength check is to be taken as:

$$M = \gamma_s M_{sw} + \gamma_w M_{wv}$$

where:

M_{sw} = Permissible still water bending moment, in kNm, defined in 2.4

M_{wv} = Vertical wave bending moment, in kNm, defined in 2.4.

γ_s = Partial safety factor for the still water bending moment, to be taken as:

$$\gamma_s = 1.0$$

γ_w = Partial safety factor for the vertical wave bending moment, to be taken as:
$\gamma_w = 1.2$

5.3 Hull girder ultimate bending capacity

5.3.1 General

The hull girder ultimate bending moment capacity, M_u is defined as the maximum bending moment capacity of the hull girder beyond which the hull structure collapses.

5.3.2 Determination of hull girder ultimate bending moment capacity

The ultimate bending moment capacities of a hull girder transverse section, in hogging and sagging conditions, are defined as the maximum values of the curve of bending moment M versus the curvature *x* of the transverse section considered *(*M_{UH} for hogging condition and M_{us} for sagging condition, see Figure 6.22). The curvature x is positive for hogging condition and negative for sagging condition.

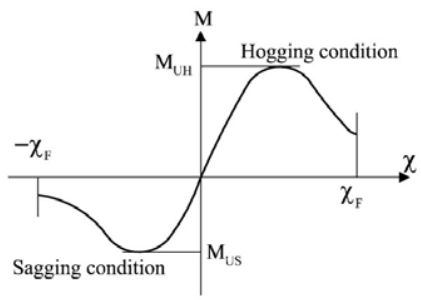

Figure 6.22 Bending moment M versus curvature χ

The hull girder ultimate bending moment capacity M_u is to be calculated using the incremental-iterative method as given in 2 of Additional Rule for Longitudinal Strength Assessment of Container Ships,E. or using an alternative method as indicated in 3 of Additional Rule for Longitudinal Strength Assessment of Container Ships,E.

5.4 Acceptance criteria

The hull girder ultimate bending capacity at any hull transverse section is to satisfy the following criteria:

$$M \leq \frac{M_U}{\gamma_M \gamma_{DB}}$$

where:

M = Vertical bending moment, in kNm, to be obtained as specified in 5.2.

M_u = Hull girder ultimate bending moment capacity, in kNm, to be obtained as specified in 5.3.

γ_M = Partial safety factor for the hull girder ultimate bending capacity, covering material, geometric and strength prediction uncertainties, to be taken as:
$\gamma_M = 1.05$

γ_{DB} = Partial safety factor for the hull girder ultimate bending moment capacity, covering the effect of double bottom bending, to be taken as:

- For hogging condition: $\gamma_{DB} = 1.15$
- For sagging condition: $\gamma_{DB} = 1.0$

For cross sections where the double bottom breadth of the inner bottom is less than that at amidships or where the double bottom structure differs from that at amidships (e.g. engine room sections), the factor γ_{DB} for hogging condition may be reduced based upon agreement with **TL**.

6. Additional requirements for large container ships

6.1 General

The requirements in 6.2 and 6.3 are applicable, in addition to requirements in item 3. to 5., to container ships with a breadth B greater than 32.26 m.

6.2 Yielding and buckling assessment

Yielding and buckling assessments are to be carried out in accordance with the Rules of **TL**, taking into consideration additional hull girder loads (wave torsion, wave horizontal bending and static cargo torque), as well as local loads. All in-plane stress components (i.e. bi-axial and shear stresses) induced by hull girder loads and local loads are to be considered.

6.3 Whipping

Hull girder ultimate strength assessment is to take into consideration the whipping contribution to the vertical bending moment according to **TL** procedures.

SECTION 7

PLATING

A. Introduction

1. General

1.1 In this section requirements to bottom, side and deck shell plating are given.

1.2 Bottom, side and deck plating is to be of not less thickness than is required for purposes of longitudinal hull girder strength given in Section 6; nor is it to be less than is required by this section.

1.3 Buckling strength of bottom, side and deck plating is to be verified in accordance with the requirements of Section 3, C.

1.4 The plate thicknesses are to be tapered gradually, if different. Gradual taper is also to be effected between the thicknesses required for strengthening of the bottom forward as per B.6 and the adjacent thicknesses.

1.5 Rounding off the required scantlings of structural members shall be made in the direction of increase. Plate thickness shall be rounded off to the nearest 0.5 or integer of millimetres.

1.6 Unless expressly provided otherwise, the plate thickness shall not be less than 4 mm.

2. Definitions

a = Width of smaller side of plate panel [m]

a_L = Spacing of floors or transverse stiffeners [mm],

a_V = Vertical acceleration [m/s^2], as defined in Section 5, B.2,

A_f = Sectional area of face bar [cm^2]

b = Width of larger side of plate panel [m],

b_H = Breadth of hatchway(s) [m],

b_L = Distance of longitudinal stiffener from bilge corner [mm],

B = Ship breadth [m], as defined in Section 1, H.2,

C_W = Wave coefficient, as defined in Section 5, B.2,

d = Diameter of opening on the strength deck [cm],

e = Distance between helicopter wheels or skids [m],

f = Wheel print area [cm^2]

f_1 = Coefficient of curvature of the panel, equal to:

$= 1 - \frac{s}{2r}$, to be taken not less than 0.75

f_2 = Coefficient of aspect ratio of the plate panel, equal to:

$= \sqrt{1.1 - 0.5\left(\frac{s}{\ell}\right)^2}$,to be taken not greater than 1.0

F = Plate panel area [m^2]

F_H = Horizontal force [kN]

F_V = Vertical force [kN],

F_W = Wind load [kN],

G = Maximum permissible helicopter take-off weight [kN],

h_B = Height of bulwark [m],

h_{DB} = Double bottom height [m],

h_{0F} = Distance from top of overflow pipe to inner bottom [m],

k = Material factor according to Section 3, A,

L = Ship length [m], as defined in Section 1, H.2,

M_e = Weight of helicopter deck [kN],

p = Specific wheel pressure [bar]

P = Applicable design pressure load [kN/m^2],

P_D = Dynamic pressure load [kN/m^2],

P_{DA} = Dynamic deck load in accommodation and service spaces [kN/m^2], as defined in Section 5, D.7,

P_{DI} = Dynamic cargo pressure load on inner bottom [kN/m^2], as defined in Section 5, D.6,

P_{DM} = Dynamic deck load in machinery spaces [kN/m^2], as defined in Section 5, D.7,

P_{HT} = Design impact force [kN],

P_{IB} = Bow impact load [kN/m^2], as defined in Section 5, E.1,

P_{IS} = Stern impact load [kN/m^2], as defined in Section 5, E.2,

P_S = Static sea pressure load [kN/m^2], as defined in Section 5, C.2,

P_{SA} = Static deck load in accommodation and service spaces [kN/m^2], as defined in Section 5, C.4,

P_{SI} = Static cargo pressure load on inner bottom [kN/m^2], as defined in Section 5, C.4,

P_{SL} = Slamming load on bottom in the forebody [kN/m^2], as defined in Section 5, E.3,

P_{SM} = Static deck load in machinery spaces [kN/m^2], as defined in Section 5, C.4,

P_{WB} = Wave pressure load on bottom [kN/m^2], as defined in Section 5, D.3,

P_{WS} = Wave pressure load on side shell, [kN/m^2], as defined in Section 5, D.2,

Q = Axel load [kN],

r = Radius of curvature [m],

R = Bilge radius [m],

s = Length of the shorter side of the elementary plate panel [m],

s_B = Spacing of stays [m],

t = Plate thickness [mm],

t_B = Thickness of the bottom shell plating [mm],

$t_{B,SW}$ = Thickness of the bottom shell plating for Ships engaged in Sheltered Water Service (Assigned with the Notations K6, L1 and L2) [mm],

t_D = Required thickness of strength deck [mm],

t_{FK} = Thickness of the flat plate keel [mm],

t_K = Corrosion addition [mm], according to Section 3, B,

t_{min} = Minimum plate thickness [mm],

$t_{min,SW}$ = Minimum shell plating thickness for Ships engaged in Sheltered Water Service (Assigned with the Notations K6, L1 and L2) [mm],

t_S = Required thickness of side shell [mm],

$t_{S,SW}$ = Thickness of the side shell plating for Ships engaged in Sheltered Water Service (Assigned with the Notations K6, L1 and L2) [mm],

T_{BFP} = Smallest design ballast draft at the forward perpendicular [m],

v_W = Wind velocity [m/s],

V = Ship speed [kn], as defined in Section 1, H.5,

W = Section modulus [cm^3],

γ_f = Safety factor,

ℓ = Length of the longer side of the elementary plate panel [m],

ℓ_H = Length of hatchway in [m],

σ_b = Bending stress [N/mm^2],

σ_p = Allowable stress of the material [N/mm^2],

σ_q = Transverse compression stress [N/mm^2],

τ = Shear stress [N/mm^2],

Δ = Displacement of the ship [t].

B. Bottom Plating

1. General

1.1 The thickness of outer and inner bottom plating shall be determined in accordance with the requirements specified in 2-8.

1.2 Thickness of bottom plating in the forebody shall be additionally checked for slamming pressure as specified in 6.

1.3 In addition the buckling strength of bottom plating shall be verified in accordance with the requirements of Section 6, C and Section 3, C.

2. Bottom Plating Thickness

2.1 The thickness of the bottom shell plating corresponding to lateral pressure is not to be less than:

$$t_B = 15 f_1 f_2 s \sqrt{\frac{P_S + P_{WB}}{\sigma_P}} + t_K \quad \text{[mm]}$$

where:

f_1 = Coefficient of curvature of the panel, equal to:

$= 1 - \frac{s}{2r}$, to be taken not less than 0.75

r = Radius of curvature [m].

f_2 = Coefficient of aspect ratio of the plate panel, equal to:

$= \sqrt{1.1 - 0.5\left(\frac{s}{\ell}\right)^2}$,to be taken not greater than 1.0

ℓ = Length of the longer side of the elementary plate panel, measured along the chord [m],

s = Length of the shorter side of the elementary plate panel, measured along the chord at mid-span of ℓ [m],

P_S = Still water pressure load on bottom [kN/m^2], as defined in Section 5, C.2,

P_{WB} = Wave pressure load on bottom [kN/m^2], as defined in Section 5, D.3,

σ_p = Allowable stress of the material [N/mm^2],

$= \frac{120}{k}$ within 0.4L amidships

$= \frac{160}{k}$ within 0.1L from the perpendiculars

Between specified regions the allowable stress, σ_p, may be varied linearly.

k = Material factor according to Section 3, A,

t_K = Corrosion allowance according to Section 3, B,

2.2 Bottom Plating Thickness for Ships engaged in Sheltered Water Service (Assigned with the Notations K6, L1 and L2)

2.2.1 The thickness $t_{B,SW}$ of bottom plating is not to be less than determined by the following formula:

$$t_{B,SW} = 1.3 \cdot \frac{a}{a_0} \cdot \sqrt{\frac{L \cdot T}{H}} \quad \text{[mm]}$$

$t_{B,SW}$ is not to be less than minimum thickness $t_{min,SW}$ determined in the item B.3.3 and need not to be greater than greater of t_B and t_{min} determined according to 2.1 and 3.1 or 3.2 respectively.

a_0 = standard frame spacing [m], defined as:

$$a_0 = \frac{L}{500} + 0.48$$

2.2.2 For ships having flat bottoms the thickness is to be increased by 0.5 mm.

2.2.3 The thickness within 0.05 L from the forward and aft end of the length L may be 1.0 mm less than the value determined by according to item B.2.2.1.

2.2.4 Strengthening of the bottom forward according to item B.6 is not required.

3. Minimum Thickness

3.1 At no point the thickness of the bottom shell plating shall be less than:

$$t_{min} = \left(1.5 - \frac{L}{100}\right)\sqrt{Lk} \quad \text{[mm]} \quad \text{for } L < 50 \text{ m}$$

$$t_{min} = \sqrt{Lk} \quad \text{[mm]} \quad \text{for } L \geq 50 \text{ m}$$

3.2 For bulk carriers see Section 27, for tankers see Section 28.

3.3 For ships engaged in sheltered water service (assigned with the notations **K6, L1** and **L2**), the minimum thickness $t_{min,SW}$ is defined as:

$t_{min,SW}$ = 3.5 [mm]

4. Keel Plate

4.1 A keel plate shall extend over the complete length of the ship. The width of the flat plate keel is not to be less than:

$$b = 800 + 5L \quad \text{[mm]}$$

4.2 The thickness of the flat plate keel is not to be less than:

$t_{FK} = t_B + 2.0$ [mm] within 0.7L amidships including the engine room

$t_{FK} = t_B$ [mm] otherwise

t_B = Thickness of the bottom plating [mm] according to 2 – 3.

4.3 For ships exceeding 100 m in length, the bottom of which is longitudinally framed, the flat plate keel is to be stiffened by additional longitudinal stiffeners fitted at a distance of approximately 500 mm from centre line. The sectional area of one longitudinal stiffener should not be less than 0.2L cm^2.

4.4 Where a bar keel is arranged, the adjacent garboard strake shall have the scantlings of a flat plate keel.

5. Bilge Plating

5.1 The thickness of the bilge strake is to be determined as required for the bottom plating according to 2-3.

5.2 Thickness of the bilge plating shall not be less than that of the adjacent bottom plating and the side plating.

5.3 If according to Section 3, A a higher steel grade than A/AH is required for the bilge strake, the width of the bilge strake is not to be less than:

$$b = 800 + 5L \quad \text{[mm]}$$

5.4 At the end of the curved bilge strake longitudinal stiffeners or girders are to be arranged. When the stiffeners are arranged outside the bilge radius sufficient buckling resistance is to be shown, according to Section 3, C taking into account the stresses according to Section 6, D and the compression stresses

$$\sigma_q = \frac{(P_S + P_D)R}{1000t} \quad \text{[N/mm}^2\text{]}$$

acting coincidently in the transverse direction.

R = Bilge radius [mm],

P_S = Static pressure load [kN/m^2], as given in Section 5, C.2,

P_D = Dynamic pressure load [kN/m^2], as given in Section 5, D, or bow impact - bottom slamming load, as given in Section 5, E, as the case may be,

t = Plate thickness [mm].

The plane plate fields are to be taken as follows:

$$a_L\left(b_L + \frac{R}{4}\right) \qquad [mm^2]$$

a_L = Spacing of floors or transverse stiffeners [mm],

b_L = Distance of the longitudinal stiffener from the end of corner radius [mm].

5.5 If the derived thickness for the plane plate field is larger than that for the curved bilge strake according to 5.1 the reinforcement is to be expanded by a minimum of R/6 into the radius.

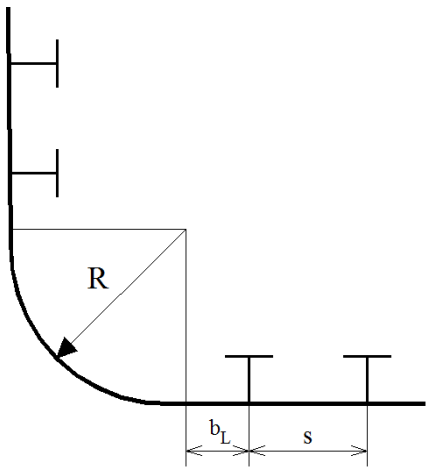

Figure 7.1 Bilge strake stiffeners

6. Bottom Plating Forward

6.1 The thickness of the bottom plating of the flat part of the ship's bottom in the fore body up to a height of $0.05T_{BFP}$ or 0.3 m above base line, whichever is smaller, is not to be less than:

$$t = 0.9 f_1 f_2 s\sqrt{P_{SL} k} + t_K \qquad [mm]$$

T_{BFP} = Smallest design ballast draft at the forward perpendicular [m]

P_{SL} = Slamming load on bottom in the forebody [kN/m^2], as defined in Section 5, E.3.

Note: Excluding CSR Oil Tankers, for every oil tanker subject to Regulation 18 of MARPOL 73/78 Annex I, scantlings of the strengthening of bottom forward is to be based on the draft obtained by using segregated ballast tanks only.

6.2 Above $0.05T_{BFP}$ or 0.3 m above base line (whichever is smaller) the plate thickness may gradually be tapered to the rule thickness determined according to 2-3. For ships with a rise of floor the strengthened plating shall at least extend to the bilge curvature.

7. Inner Bottom Plating

7.1 The thickness of the inner bottom plating is not to be less than:

$$t = 1.1 s\sqrt{Pk} + t_K \qquad [mm]$$

P = Design pressure [kN/m²], to be taken as the greater of the following values:

$$P_1 = 10(T - h_{DB})$$

$P_2 = 10h_{OF}$ Where the inner bottom forms a tank boundary

$P_3 = P_{SI} + P_{DI}$ Pressure load on the inner bottom according to Section 5, C.4.2 and Section 5, D.6.4.

h_{OF} = Distance from top of overflow pipe to inner bottom [m],

h_{DB} = Double bottom height [m].

7.2 If no ceiling is fitted on the inner bottom, the thickness determined in accordance with 7.1 for P_1 or P_2 is to be increased by 2 mm. This increase is not required for ships with the notation CONTAINER SHIP.

7.3 For strengthening in the range of grabs, see Section 27, B.10.

7.4 In machinery spaces, thickness of the inner bottom between the foundation girders is to be increased by 2 mm. This increase is to be extended beyond the engine seating by minimum three frame spacing.

C. Side Shell Plating

1. General

1.1 The thickness of side plating shall be determined in accordance with the requirements specified in 2-8.

1.2 Thickness of side plating in the fore body and after body shall be additionally checked for bow and stern impact pressures as specified in 5.

1.3 For ships for which proof of longitudinal strength is required or carried out proof of buckling strength of the side shell is to be provided in accordance with the requirements of Section 3, C and Section 6, C.

2. Side Shell Plating Thickness

2.1 The thickness of the side shell plating within 0.4L amidships corresponding to lateral pressure is not to be less than:

$$t_S = 15 f_1 f_2 s \sqrt{\frac{P_S + P_{WS}}{\sigma_P}} + t_K \qquad \text{[mm]}$$

where:

P_S = Static sea pressure load on side shell [kN/m^2], as defined in Section 5, C.2.

P_{WS} = Wave pressure load on side shell, [kN/m^2], as defined in Section 5, D.2.

σ_p = Allowable stress of the material [N/mm^2],

= $\frac{120}{k}$ within 0.4L amidships

= $\frac{160}{k}$ within 0.1L from the perpendiculars

Between specified regions the allowable stress, σ_p, may be varied linearly.

2.2 Side Shell Plating and Sides of Superstructures for Ships Engaged In Sheltered Water Service (Assigned With the Notations K6, L1 and L2)

Thickness for side shell plating and sides of superstructures $t_{S,SW}$ shall be;

$t_{S,SW} = t_{B,SW}$ $\qquad$ $t_{S,SW} \geq t_{min,SW}$

Thickness may be reduced by 0.5 mm within 0.4**L** however no reduction of thickness shall be carried out within 0.05 **L** from the forward and aft end of the length **L**.

However the thickness $t_{S,SW}$ shall be not less than minimum thickness t_{min} given in the item C.3.3.

3. Minimum Thickness

3.1 At no point the thickness of the side shell plating shall be less than:

$$t_{min} = \left(1.5 - \frac{L}{100}\right)\sqrt{Lk} \qquad \text{[mm] for } L < 50 \text{ m}$$

$$t_{min} = \sqrt{Lk} \qquad \text{[mm] for } L \geq 50 \text{ m}$$

3.2 Above a level $T+C_W/2$ above base line smaller thickness than t_{min} may be accepted if the stress level permits such reduction (for C_W see Section 5, B.2).

3.3 For ships engaged in sheltered water service (assigned with the notations **K6, L1** and **L2**); the minimum thickness $t_{min,SW}$ is defined as:

$t_{min,SW}$ = 3.5 [mm]

4. Sheer Strake Plating

4.1 The width of the sheer strake is not to be less than:

$b = 800 + 5L$ [mm]

but need not exceed 1800 mm.

4.2 The thickness of the sheer strake shall, in general, not be less than the greater of the following two values:

$t = 0.5\,(t_D + t_S)$ [mm]

$t = t_S$ [mm]

t_D = Required thickness of strength deck,

t_S = Required thickness of side shell.

4.3 Where the connection of the deck stringer with the sheer strake is rounded, the radius is to be at least 15 times the plate thickness.

4.4 Welds on upper edge of sheer strake are subject to special approval. Regarding welding between sheer strake and deck stringer, see Section 20.

Holes for scuppers and other openings are to be carefully rounded, any notches shall be avoided.

4.6 For ships with a speed $V > 1.6\sqrt{L}$ [kn], additional strengthening of the sheer strake may be required.

5. Bow and Stern Plating

5.1 The thickness of the side shell plating forward of 0.15L from the stem is not to be less than

$$t_S = 10 f_1 f_2 s \sqrt{\frac{P_{IB}}{\sigma_P}} + t_K \quad \text{[mm]}$$

where:

P_{IB} = Bow impact load [kN/m^2], as defined in Section 5, E.1,

σ_P = Allowable stress [N/mm^2] of the material,

$= \dfrac{160}{k}$

5.2 The thickness of the side shell plating aft of 0.15L from the AP is not to be less than

$$t_S = 10 f_1 f_2 s \sqrt{\frac{P_{IS}}{\sigma_P}} + t_K \quad \text{[mm]}$$

where:

P_{IS} = Stern impact load [kN/m^2], as defined in Section 5, E.2.

6. Side Plate Thickness for Harbour and Tug Manoeuvres

6.1 In those zones of the side shell which may be exposed to concentrated loads due to harbour and tug manoeuvres the plate thickness is to be determined by the following formula:

$$t = 0.65\sqrt{P_{HT} k} + t_K \quad \text{[mm]}$$

P_{HT} = Design impact force [kN]

$= \dfrac{\Delta}{100}$ $\quad 200 \le P_{HT} \le 1000$

Δ = Displacement of the ship [t].

Any reductions in thickness for restricted service are not permissible.

6.2 The length of the strengthened areas shall not be less than approximately 5 m. The height of the strengthened areas shall extend from about 0.5 m. above ballast waterline to about 1.5 m. above load water line.

6.3 For ships of 100 m. in length and over; at least one strengthened area is to be provided amidships in addition to the two strengthened areas at the ship's shoulders.

6.4 Where the side shell thickness so determined exceeds the thickness required by 2–3, it is recommended to specially mark these areas.

7. Side Plating of Superstructures

7.1 Superstructures extending into the range of 0.4L amidships and the length of which exceeds 0.15L are defined as effective superstructures. Their side plating is to be treated as shell plating and the thickness of plating shall be determined according to 2-3.

7.2 All superstructures being located beyond 0.4L amidships or having a length of less than 0.15L or less than 12 meters are considered as non-effective

superstructures and the side plating of non-effective superstructures is to be determined according to Section 13.

7.3 For strengthening at the ends of superstructures see Section 13.

8. Side Plating in Way of Propellers and Propeller Brackets

8.1 In way of propeller brackets and shaft bossing, the thickness of the shell plating is to be the same as required for 0.4L amidships. In way of the struts, the shell plating is to have a strengthened plate of 1.5 times the midship thickness. In this connection Section 20, B.4.3 has to be observed.

8.2 Where propeller revolutions are exceeding 300 rpm, particularly in case of flat bottoms measures are to be taken to reduce the size of plate panels above or forward of the propeller (see also Section 8, B.2.3).

9. Bilge Keels

9.1 Where bilge keels are provided they are to be continuous over their full length. The bilge keels are to be welded to continuous flat bars which are connected to the shell plating with their flat side by means of a closed watertight welded seam.

9.2 The bilge keel and the intermediate flat bar are to be made of steel with the same yield stress as the one of the bilge strake. The bilge keel with a length greater than 0.15L is to be made with the same grade of steel as the one of bilge strake.

9.3 The ends of the bilge keels are to have soft transition zones according to Figure 7.2. The ends of the bilge keels shall terminate above an internal stiffening element.

9.4 Any scallops or cut-outs in the bilge keels are to be avoided.

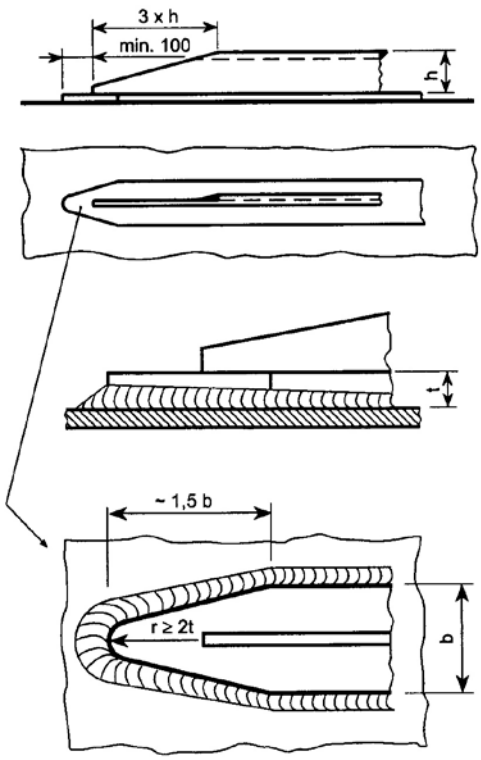

Figure 7.2 Soft transition zones at the ends of bilge keels

10. Openings in the Shell Plating

10.1 Where openings are cut in the shell plating for windows or side scuttles, hawses, scuppers, sea valves etc., they are to have well rounded corners.

If the width of these openings exceed 500 mm. in ships up to L = 70 meters, and 700 mm. in ships having a length of more than 70 meters, the openings are to be surrounded by framing, a thicker plate or a doubling.

10.2 Where the above openings are cut in the sheer strake within 0.4L amidships, generally a strengthened plate or a continuous doubling is to be provided compensating the omitted plate sectional area. For shell doors and similar large openings see Section 23. Special strengthening is required in the range of openings at ends of superstructures

10.3 The shell plating in way of the hawse pipes is

to be reinforced.

10.4 Scupper pipes and valves are to be connected to the shell by weld flanges. Instead of weld flanges short flanged sockets of adequate thickness may be used if they are welded to the shell in an appropriate manner. Reference is made to Section 16.

Construction drawings are to be submitted for approval.

10.5 The ship's side shall not have any openings between the embarkation station of the marine evacuation system and the waterline in the lightest seagoing condition and means shall be provided to protect the system from any projections.

No openings, be they permanent openings, recessed promenades or temporary openings such as shell doors, windows or ports, are allowed in this particular area.

On passenger ships, windows and side scuttles of the non-opening type are allowed in this area if complying with Section 21,B 9.3. On cargo ships, the windows and side scuttles in the area in way of a marine evacuation system, if installed, shall only be of the non-opening type.

11. Bulwarks

11.1 Efficient bulwarks or guard rails are to be fitted at the boundaries of all exposed parts of the freeboard deck and superstructure decks directly attached to the freeboard deck, as well as the first tier of deckhouses fitted on the freeboard deck and the superstructure ends.

11.2 The height of the bulwarks or guard rails is to be at least 1 m from the deck. However, where their height would interfere with the normal operation of the ship, a lesser height may be accepted, if adequate protection is provided and subject to any applicable statutory requirement.

11.3 The thickness of bulwark plating is not to be less than:

$t = L/30 + 3$ [mm] for L ≤ 150 m
$t = 8$ [mm] for L > 150 m.

The thickness of bulwark plating forward particularly exposed to wash of sea is to be equal to the thickness of the forecastle side plating according to Section 13, B.1.

In way of superstructures above the freeboard deck abaft 0.25L from FP the thickness of the bulwark plating may be reduced by 0.5 mm.

11.4 Plate bulwarks are to be stiffened at the upper edge by a bulwark rail section.

11.5 The bulwark is to be supported by bulwark stays fitted at every alternate frame. The stays shall have sufficient width at deck level. The deck beam shall be continuously welded to the deck in way of the stay. Bulwarks on forecastle decks shall have stays fitted at every frame where the flare is considerable.

Stays of increased strength shall be fitted at ends of bulwark openings. Openings in bulwarks should not be situated near the end of superstructures.

The section modulus of stays in way of the lower part of the bulwark is to be not less than the value obtained from the following formula:

$$W = 4Ps_B h_B^2 \quad [cm^3]$$

P = Wave load on side shell, P_{WS}, as given in Section 5, D.2.2.1 or bow impact load P_{IB} as given in Section 5, E.1 as the case may be, not to be taken less than 15 [kN/m^2],

s_B = Spacing of stays [m],

h_B = Height of bulwark, measured between its upper edge and the deck [m],

The actual section of the connection between stays and deck structures is to be taken into account when calculating the above section modulus. In addition Section 3, B.5 shall be considered.

It is recommended to provide flat bars in the lower part of stays which are to be effectively connected to the deck plating. Particularly in ships the strength deck of which is made of higher tensile steel, smooth transitions are to be

provided at the end connection of the flat bar faces to deck.

11.6 On ships carrying deck cargo, the bulwark stays are to be designed for a load at an angle of heel of 30°. Under such loads the following stresses are not to be exceeded:

bending stress: $\sigma_b = \frac{120}{k}$ [N /mm^2]

shear stress: $\tau = \frac{80}{k}$ [N /mm^2]

11.7 An adequate number of expansion joints is to be provided in the bulwark. In longitudinal direction the stays adjacent to the expansion joints shall be as flexible as practicable.

The number of expansion joints for ships exceeding 60 m in length should not be less than L/40 but need not be greater than n = 5.

11.8 Openings in the bulwarks shall have sufficient distance from the end bulkheads of superstructures. For avoiding cracks the connection of bulwarks to deckhouse supports is to be carefully designed.

11.9 For the connection of bulwarks with the sheer strake 4.4 is to be observed.

11.10 Bulwarks are to be provided with freeing ports of sufficient size. See also Section 16, C and ICLL.

D. Deck Plating

1. General

The thickness of the deck plating is not to be less than that required to obtain the hull-girder section modulus given in Section 6, C, nor less than required by this section. In addition, the plating of decks forming boundaries of tanks shall fulfil the requirements for watertight bulkheads at heights corresponding to those at which the decks are located.

2. Strength Deck Plating

2.1 The strength deck is, in general, the uppermost continuous deck at that part to which the shell plates extend.

In the case of a superstructure or deckhouses contributing to the longitudinal strength, the strength deck is the deck of the superstructure or the deck of the uppermost deckhouse.

2.2 The thickness requirement corresponding to lateral pressure is given by:

$$t_D = 15 f_1 f_2 s \sqrt{\frac{P}{\sigma_P}} + t_K \quad \text{[mm]}$$

where:

P = Wave load on weather deck (P_{WD}) as defined in Section 5, D.4, or cargo load on deck (P_{SC} +P_{WC}) as defined in Section 5, C.4 and Section 5, D.6, whichever is relevant

σ_p = Allowable stress of the material [N/mm^2],

= $\frac{120}{k}$ within 0.4L amidships

= $\frac{160}{k}$ within 0.1L from the perpendiculars

Between specified regions the allowable stress, σ_p, may be varied linearly.

2.3 The deck sectional area abreast the hatchways, if any, is to be so determined that the section modulus of the cross section is in accordance with the requirements of Section 6, C.

2.4 The thicknesses of strength deck plating are to be extended into the superstructure for a distance equal to the width of the deck plating abreast the hatchway. For strengthening of the stringer plate in the breaks, see Section 13, A.4.

2.5 If the strength deck is protected by sheathing a smaller corrosion allowance t_K than required by Section 3, B may be permitted. Where sheathing other than wood is used, attention is to be paid that, the sheathing does not affect the steel. The sheathing is to be effectively fitted to the deck.

2.6 For ships with a speed $V > 1.6\sqrt{L}$ [kn], additional strengthening of the strength deck may be required.

3. Deck Stringer Plate

3.1 If the thickness of the strength deck plating is less than that of the side shell plating, a stringer plate is to be fitted having the width of the sheer strake and the thickness of the side shell plating.

3.2 Where the connection of the deck stringer with the sheer strake is rounded, the radius is to be at least 15 times the plate thickness.

3.3 Regarding welding between sheer strake and deck stringer see Section 20.

4. Minimum Thickness

4.1 The thickness of deck plating is not to be less than:

$$t_{min} = (4.5 + 0.05L)\sqrt{k} \qquad \text{[mm]}$$

L need not be taken greater than 200 m.

4.2 When the deck is located above the level of $T+C_W$ above basis, a smaller thickness than t_{min} may be accepted if the stress level permits such reduction. For C_W, see Section 5, B.2.1.

4.3 The deck structure inside line of hatchways is to be so designed that the compressive stresses acting in the ship's transverse direction can be safely transmitted. Proof of bending strength is to be provided according to Section 3, C.

5. Openings in the Strength Deck

5.1 Openings in the strength deck are to be kept to a minimum and spaced as far as practicable from one another and from the breaks of effective superstructures. Openings are to be cut as far as practicable from hatchway corners, hatch side coamings and side shell plating.

5.2 All openings in the strength deck are to have well rounded corners. The hatchway corner radius is not to be less than:

$$r = nb_H\left(1 - \frac{b_H}{B}\right) \geq 0.1 \qquad \text{[m]}$$

$$n = \ell_H/200 \qquad \text{with} \qquad 0.1 \leq n \leq 0.25$$

ℓ_H = Length of hatchway [m],

b_H = Breadth [m], of hatchway or total breadth of hatchways in case of more than one hatchway. b/B need not be taken smaller than 0.4.

For ships with large deck openings according to Section 6, F, the design of the hatch corners will be specially considered on the basis of the stresses due to longitudinal hull girder bending, torsion and transverse loads.

5.3 Circular openings are to be edge-reinforced. The sectional area of the face bar is not to be less than:

$$A_f = 0.25dt_D \qquad \text{[cm}^2\text{]}$$

d = Diameter of opening [cm],

t_D = Deck plate thickness [cm].

The reinforcing face bar may be dispensed with, where the diameter is less than 300 mm and the smallest distance from another opening is not less than 5 x diameter of the smaller opening. The distance between the outer edge of openings for pipes etc. and the ship's side is not to be less than the opening diameter.

5.4 Where the hatchway corners are elliptic or parabolic, strengthening according to 5.3 is not required. The dimensions of the elliptical and parabolic corners shall be as shown in Figure 7.3.

Where smaller values are taken for a and c, reinforced insert plates are required which will be considered in each individual case.

5.5 At the corners of the engine room casings, strengthening according to 5.3 may also be required, depending on the position and the dimensions of the casing.

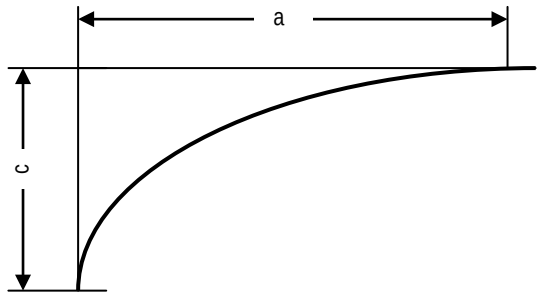

a ≥ 2c

c = r according to 5.2

Figure 7.3 Elliptic or parabolic hatch corner

5.6 The hatchway corners are to be surrounded by strengthened plates (insert plates) which are to extend over at least one frame spacing fore-and-aft and athwart ships. Within 0.5L amidships, the thickness of the strengthened plate is to be equal to the deck thickness abreast the hatchway plus the deck thickness between the hatchways. Outside 0.5L amidships the thickness of the strengthened plated need not exceed 1.6 times the thickness of the deck plating abreast the hatchway. The reinforcement may be dispensed with in case of proof by a fatigue analysis.

6. Buckling Strength

For ships for which proof of longitudinal strength is required or carried out, proof of buckling strength of the deck shell is to be provided in accordance with the requirements of Section 3, C and Section 6, C.

7. Lower Decks

7.1 Thickness of Decks for Cargo Loads

The plate thickness of decks for cargo loads is not to be less than:

$$t_D = 15 f_1 f_2 s \sqrt{\frac{P}{\sigma_P}} + t_K \qquad \text{[mm]}$$

where:

P = Cargo load on deck (P_{SC}+P_{WC}) as defined in Section 5, C.4 and Section 5, D.6,

σ_p = Allowable stress of the material [N/mm^2]

$= \frac{120}{k}$ within 0.4 L

$= \frac{160}{k}$ within 0.1 L from the perpendiculars

Between specified regions the allowable stress, σ_p, may be varied linearly.

t_{min} = $(5.5 + 0.02L)\sqrt{k}$ [mm] for the 2nd deck

= 6.0 mm. for other lower decks

L need not be taken greater than 200 m.

7.2 Thickness of Decks for Wheel Loading

7.2.1 The thickness of deck plating for wheel loading is to be determined by the following formula:

$$t = c\sqrt{Pk} + t_K \qquad \text{[mm]}$$

P = Load of one wheel or group of wheels on a plate panel a x b

$$P = \frac{Q}{n}\left(1 + \frac{a_V}{g}\right) \qquad \text{[kN]}$$

Q = Axle load [kN]

For fork lift trucks Q is generally to be taken as the total weight of the fork lift truck.

n = Number of wheels or group of wheels per axle,

a_V = Vertical acceleration as defined in Section 5, B.2,

a_V = 0 , for harbour conditions,

c = Factor according to the following formula:

for **b/a = 1**:

$$c = 1.87 - \sqrt{\frac{f}{F}\left(3.4 - 4.4\frac{f}{F}\right)} \qquad 0 < \frac{f}{F} < 0.3$$

for

$$0.3 \le \frac{f}{F} \le 1.0$$

for

$$c = 1.20 - 0.40\frac{f}{F}$$

for **b/a ≥ 2.5**:

$$c = 2.00 - \sqrt{\frac{f}{F}\left(5.2 - 7.2\frac{f}{F}\right)} \quad \text{for} \quad 0 < \frac{f}{F} < 0.3$$

$$c = 1.20 - 0.517\frac{f}{F} \quad \text{for} \quad 0.3 \le \frac{f}{F} \le 1.0$$

for intermediate values of b/a the factor c is to be obtained by direct interpolation.

f = Print area of wheel or group of wheels according to Figure 7.4.

a = Width of smaller side of plate panel (in general beam spacing)

b = Width of larger side of plate panel

F = Area of plate panel a x b. F need not be taken greater than $2.5a^2$.

In case of narrowly spaced wheels these may be grouped together to one wheel print area.

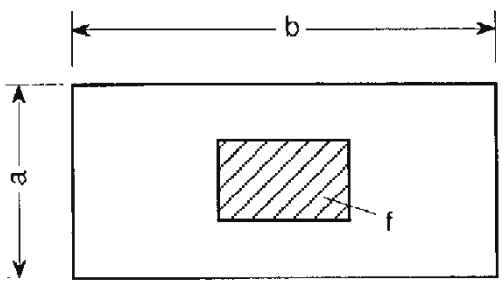

Figure 7.4 Foot print of wheel

7.2.2 Where the wheel print area is not known, it may approximately be determined as follows:

$$f = 100\frac{P}{p} \qquad [cm^2]$$

p = Specific wheel pressure according to Table 7.1.

Table 7.1 Specific wheel pressure

Type of vehicle	Specific wheel pressure p [bar]	
	Pneumatic tyres	Solid rubber tyres
Private cars	2	-
Trucks	8	-
Trailers	8	15
Forklift trucks	6	15

7.2.3 In deck beams and girders, the stress is not to exceed 165/k [N/mm^2].

7.3 Machinery Deck and Accommodation Decks

The thickness of the plates of machinery decks and other accommodation decks is not to be less than:

$$t_D = 15 f_1 f_2 s\sqrt{\frac{P}{\sigma_p}} + t_K \qquad [mm]$$

where:

P = Load on deck (P_{SA}+P_{DA}) as defined in Section 5, C.4 and Section 5, D.6 for accommodation decks and (P_{SM}+P_{DM}) as defined in Section 5, C.4 and Section 5, D.6 for machinery decks

σ_p = Allowable stress of the material [N/mm^2]

$= \frac{120}{k}$ within 0.4L amidships

$= \frac{160}{k}$ within 0.1L from the perpendiculars

Between specified regions the allowable stress, σ_p, may be varied linearly.

t_{min} = 5 mm.

8. Helicopter Decks

8.1 General

8.1.1 The requirements of this sub-section apply to special pillar-supported landing decks or decks of superstructures and deckhouses specially equipped for the landing and take-off of helicopters

8.1.2 The landing area is to be dimensioned for the largest helicopter type expected to use the helicopter deck. The approach and landing area are to be free of obstructions above the level of the deck or the platform.

8.1.3 For scantling purposes, other loads (cargo, snow/ice, etc.) are to be considered simultaneously or separately, depending on the conditions of operation to be expected. Where these conditions are not known, the data contained in 8.2, below may be used as a basis.

8.2 Design Loads

Besides the wave pressure load acting on a landing platform, obtained according to Section 5, D.4, the following load cases are to be considered for the scantlings of the helicopter deck:

8.2.1 Loading Case 1 (LC 1)

Helicopter lashed on deck, with the following vertical forces acting simultaneously:

a) Wheel and/or skid force P acting at the points resulting from the lashing position and distribution of the wheels and/or supports according to helicopter construction.

$$P = 0.5G\left(1 + \frac{a_v}{g}\right) \qquad [kN]$$

G = Maximum permissible take-off weight [kN],

a_v = Vertical acceleration, see Section 5, B.2,

P = Evenly distributed force over the contact area for single wheel according to data supplied by helicopter manufacturers. The contact area is to be taken 30 x 30 cm if not specified by the helicopter manufacturer. For dual wheels or skids the contact area is to be determined individually in accordance with given dimensions,

e = Wheel or skid distance according to helicopter types to be expected [m].

b) Force due to weight of helicopter deck M_e as follows:

$$F_V = M_e\left(1 + \frac{a_v}{g}\right) \qquad [kN]$$

c) Load p = 2.0 kN/m^2 evenly distributed over the entire landing deck.

8.2.2 Loading Case 2 (LC 2)

Helicopter lashed on deck, with the following horizontal and vertical forces acting simultaneously:

a) Forces acting horizontally:

$$F_H = 0.6\left(G + M_e\right) + F_W \qquad [kN]$$

F_W = Wind load, taking into account the lashed helicopter [kN]

v_W = wind velocity to be taken 50 m/s.

b) Forces acting vertically:

$$F_V = G + M_e \qquad [kN]$$

8.2.3 Loading Case 3 (LC 3)

Normal landing impact, with the following forces acting simultaneously:

a) Wheel and/or skid load P at two points simultaneously, at an arbitrary (most unfavourable) point of the helicopter deck (landing zone + safety zone)

$$P = 0.75G \qquad [kN]$$

b) Load p = 0.5 kN/m^2 evenly distributed (for taking into account snow or other environmental loads)

c) Weight of the helicopter deck

d) Wind load in accordance with the wind velocity admitted for helicopter operation (v_W), where no data are available, v_W = 25 m/s may be used.

8.3 Scantlings of Structural Members

8.3.1 Stresses and forces in the supporting structure are to be evaluated by means of direct calculations.

8.3.2 Permissible stresses for stiffeners, girders and substructure:

$$\sigma_P = \frac{235}{k \cdot \gamma_f} \; [N/mm^2]$$

γ_f = safety factors according to Table 7.2.

Table 7.2 Safety factor γ_f

Structural Element	Safety factor (γ_f)		
	LC 1	**LC 2**	**LC 3**
Stiffeners (deck beams)	1.25	1.25	1.1
Main girders (deck girders)	1.45	1.45	1.45
Load-bearing structure (pillar system)	1.7	1.7	2.0

8.3.3 The thickness of the plating is to be determined according to D.7.2. where the coefficient c may be reduced by 5 %.

8.3.4 Proof of sufficient buckling strength is to be carried out in accordance with Section 3, C for structures subjected to compressive stresses.

SECTION 8

SUPPORTING STRUCTURES

A. Introduction

1. General

1.1 In this section requirements to bottom, side and deck supporting structures are given

1.2 Direct stress calculations based on structural design principles outlined in Section 4 will be considered as alternate basis for scantlings.

2. Definitions

A_B = Load area of a beam [m^2],

A_D = Shear area of transverse deck beams and of deck longitudinals [cm^2],

A_F = Sectional area of face plate [cm^2],

A_{FT} = Shear area of frames in tanks or in hold spaces for ballast water [cm^2],

A_P = Shear area of peak frames [cm^2],

A_{PF} = Sectional area of plate floors [cm^2],

A_{PS} = Sectional area of pillar [cm^2],

A_{R0} = Upper end shear area of main frames [cm^2],

A_{RU} = Lower end shear area of main frames [cm^2],

A_S = Shear area of the stiffeners [cm^2],

A_T = Shear area of tween deck and superstructure frames [cm^2],

A_W = Shear area of web frames [cm^2],

A_ℓ = Shear area of longitudinals [cm^2],

B = Ship's breadth [m], as defined in Section 1, H.2,

c_R = Factor for curved frames,

$$1.0 - 2\frac{h_C}{\ell} \geq 0.75$$

D = Ship's depth [m], as defined in Section 1, H.2,

D_U = Depth up to the lowest deck [m],

DF = Height of web frame [m],

E = Young's modulus [N/mm^2],

e = Width of plating [m],

e_W = Spacing of web frames [m],

F_i = Load from pillars located above the pillar considered [kN],

F_L = Load on pillar [kN],

G_S = Ship weight during docking [kN],

h_b = Height of bracket [mm],

h_C = Maximum height of curve [m],

h_{DB} = Depth of centre girder [m],

h_{DBA} = Depth of centre girder as built [m],

h_F = Depth of floor plates [m],

h_S = Height of heel stiffener [mm],

h_W = Depth of web frames [m],

I_a = Moment of inertia of longitudinal frame [cm^4],

I_{pillar} = Moment of inertia of pillar [cm^4],

I_W = Moment of inertia of web frame [cm^4],

k = Material factor according to Section 3,A,

L = Ship's length [m], as defined in Section 1, H.2,

L_{KB} = Length of the keel block range [m],

M_f = Bending moment induced by fender [kNm],

$$m_a = 0.204\frac{s}{\ell}\left[4-\left(\frac{s}{\ell}\right)^2\right] \qquad \text{where } \left(\frac{s}{\ell}\right) \le 1$$

$$m_k = 1-\left[\frac{\ell_{KI}-\ell_{KJ}}{1000\ell}\right]$$

$$m = {m_K}^2 - {m_a}^2 \ge \frac{{m_K}^2}{2}$$

P = Pressure load [kN/m^2],

P_B = Single engine output [kW],

P_{BS} = Blow out pressure at the safety valve [bar],

P_{DC} = Dynamic cargo load [kN/m^2] as defined in Section 5, D.6,

P_{DE} = Wave load on exposed decks [kN/m^2] as defined in Section 5, D.5,

P_{DI} = Dynamic load on the inner bottom [kN/m^2] according to Section 5, D.6.4,

P_{DT} = Dynamic tank pressure load [kN/m^2] as defined in Section 5, D.8,

P_f = Berthing impact force induced by fender [kN],

P_{IB} = Impact load on bow structures [kN/m^2] according to Section 5, E.1,

P_{IS} = Impact load on stern structures [kN/m^2] according to Section 5, E.2,

P_S = Static pressure load on ship's sides [kN/m^2] according to Section 5, C.2,

P_{SC} = Static cargo load [kN/m^2] as defined in Section 5, C.4,

P_{SI} = Static load on the inner bottom [kN/m^2], according to Section 5, C.4.2,

P_{SL} = Slamming load [kN/m^2] according to Section 5, E.3,

P_{ST} = Static tank pressure load [kN/m^2] according to Section 5, C.3,

P_T = Design tank pressure load [kN/m^2] according to Section 5, C.3, and Section 5, D.8,

P_{WB} = Wave pressure load on bottom [kN/m^2] according to Section 5, D.3,

P_{WD} = Wave load on weather deck [kN/m^2] as defined in Section 5, D.4,

P_{WS} = Wave pressure load on ship's sides [kN/m^2] according to Section 5, D.2,

q_0 = Nominal keel block load [kN/m],

R = Bending radius of plate [m],

R_{eH} = Minimum nominal upper yield point [N/mm^2], as defined in Section 3, A,

S = Safety factor,

s = Spacing of frames [m],

s_F = Spacing of plate floors [m],

s_S = Spacing of stiffeners [m],

T = Ship's draught [m], as defined in Section 1, H.2,

T_{MIN} = Smallest ballast draught [m],

t = Plate thickness [mm],

t_F = Thickness of floor plates [mm],

t_G = Thickness of girders [mm],

t_{GE} = Thickness of centre girder at the ends [mm],

t_{GM} = Thickness of centre girder within 0.7L amidships [mm],

t_S = Web thickness of side transverses [mm],

t_W = Thickness of web frames [mm],

t_{WP} = Wall thickness of tubular pillar [mm],

x = Distance of structure from AP [m],

y = Distance between supporting point of the plate floor (ship's side, longitudinal bulkhead) and the section considered [m],

z = Distance of structure above baseline [m],

W = Section modulus [cm^3],

W_a = Section modulus of profile [cm^3],

W_{BF} = Section modulus of bottom frames [cm^3],

W_D = Section modulus of transverse deck beams and of deck longitudinals [cm^3],

W_F = Section modulus of floor plates [cm^3],

W_{FT} = Section modulus of frames in tanks or in hold spaces for ballast water [cm^3],

W_p = Section modulus of peak frames [cm^3],

W_R = Section modulus of main frames [cm^3],

W_S = Section modulus of stiffeners [cm^3],

W_T = Section modulus of tween deck and superstructure frames,

W_W = Section modulus of web frames [cm^3],

W_ℓ = Section modulus of longitudinals [cm^3],

Δ = Displacement [t],

ℓ = Unsupported span [m],

ℓ_B = Span between longitudinal bulkheads [m],

ℓ_b = Dimension of bracket [mm],

ℓ_{Ko} = Length of upper bracket connection of main frames within the length ℓ [m],

ℓ_{Ku} = Length of alt bracket connection of main frames within the length ℓ [m],

l_{pillar} = Length of pillar [m],

σ_A = Bending stresses from local stiffener bending due to lateral loads [N/mm^2],

σ_b = Bending stress [N/mm^2],

σ_h = Additional stress for fatigue strength [N/mm^2],

σ_L = Design hull girder bending stress [N/mm^2],

σ_ℓ = Bending stress [N/mm^2] in longitudinal direction,

σ_P = Permissible stress [N/mm^2],

σ_{cr} = Minimum critical buckling stress [N/mm^2],

σ_q = Bending stress in [N/mm^2] in transverse direction,

σ_V = Permissible equivalent stress [N/mm^2],

σ_x = Stress in the ship's longitudinal direction [N/mm^2],

σ_y = Stress in the ship's transverse direction [N/mm^2],

τ = Shear stress [N/mm^2].

η_{buck} = Buckling utilisation factor

B. Bottom Structures

1. General

1.1 The requirements of this sub-section apply to transversely or longitudinally framed single and double bottom structures.

1.2 The buckling strength of the bottom structures is to be examined according to Section 3, C. For this purpose the design stresses according to Section 6, C and the stresses due to local loads are to be considered.

1.3 The bottom structure is to be designed to withstand the loads resulting from the dry docking of the ship.

1.4 Provision is to be made for the free passage of water from all parts of the bottom to the suctions, taking into account the pumping rate required.

2. Single Bottom

2.1 Centre Girder

2.1.1 All single bottom ships are to have a centre girder fitted in the ship's centre line. The centre girder shall extend as far forward and aft as practicable and shall be continuous within 0.7L amidships.

2.1.2 The web thickness of centre girder within 0.7L amidships is not to be less than:

$$t_{GM} = 0.07L + 5.5 \qquad \text{[mm]}$$

The sectional area of the face plate within 0.7L amidships is not to be less than:

$$A_F = 0.7L + 12 \qquad [\text{cm}^2]$$

Towards the ends the thickness of the web plate as well as the sectional area of the face plate may be reduced by 10 %. Lightening holes are to be avoided.

2.2 Side Girders

2.2.1 Side girders are not required where the breadth measured on top of floors does not exceed 6 m. One side girder at each side of the centre girder is required where the breadth measured on top of floors is between 6 - 9 m. Where the breadth exceeds 9 m two side girders at each side of the centre girder are required.

2.2.2 For the spacing of side girders in way of bottom strengthening see 2.4.3.

2.2.3 The side girders are to extend as far forward and aft as practicable. They are to be connected to the girders of a non-continuous double bottom or are to be scarfed into the double bottom by two frame spacing.

2.2.4 The web thickness of side girders within 0.7L amidships is not to be less than:

$$t_G = 0.04L + 5 \qquad \text{[mm]}$$

The sectional area of the face plate within 0.7L amidships is not to be less than:

$$A_F = 0.2L + 6 \qquad [\text{cm}^2]$$

Towards the ends, the thickness of the web plate and the sectional area of the face plate may be reduced by 10 %.

2.3 Floor Plates

2.3.1 General

2.3.1.1 Floor plates are to be fitted at every frame. For the connection with the frames, see Section 20.

2.3.1.2 Deep floors, particularly in the after peak, are to be provided with buckling stiffeners.

2.3.1.3 The floor plates are to be provided with limbers to permit the water to reach the pump suctions.

2.3.2 Floor Plates in the Cargo Hold Area

2.3.2.1 Section modulus of floor plates fitted between after peak bulkhead and collision bulkhead in ships without double bottom or outside any double bottom is not to be less than:

$$W_F = CTs_F\ell^2 \qquad [\text{cm}^3]$$

s_F = Spacing of plate floors [m],

ℓ = Unsupported span, generally measured on upper edge of floor from side shell to side shell [m], not to be taken less than 0.7B, if the floors are not supported at longitudinal bulkheads.

C = 7.5 for spaces which may be empty at full draught, e.g. machinery spaces, storerooms, etc.

C = 4.5 elsewhere.

2.3.2.2 The depth of the floor plates is not to be less than:

$$h_F = 55B - 45 \qquad \text{[mm]}$$

Not to be taken less than 180 mm.

In ships having rise of floor the depth of the floor plate webs at 0.1ℓ from the ends of the length ℓ, where possible, shall not be less than half the required depth. In ships having a considerable rise of floor, the depth of the floor plate webs at the beginning of the turn of bilge is not to be less than the depth of the frame.

2.3.2.3 The web thickness of the floor plates is not to be less than

$$t_F = \frac{h_F}{100} + 3 \qquad \text{[mm]}$$

2.3.2.4 The web sectional area of the plate floors is to be determined according to 3.4.1.6 analogously.

2.3.2.5 The face plates of the floor plates are to be continuous over the span ℓ. If they are interrupted at the centre keelson, they are to be connected to the centre keelson by means of full penetration welding.

2.3.3 Floor Plates in the Peaks

2.3.3.1 The thickness of the floor plates in the peaks is not to be less than:

$$t_F = 0.035L + 5 \qquad \text{[mm]}$$

The thickness, however, need not be greater than required by 3.4.1.5.

2.3.3.2 The floor plate height in the fore peak above top of keel or stem shoe is not to be less than:

$$h_F = 0.06D + 0.7 \qquad \text{[m]}$$

2.3.3.3 The floor plates in the after peak are to extend over the stern tube see also Section 10, B.1.4.

2.3.3.4 Where propeller revolutions are exceeding 300 rpm (approximately) the peak floors above the propeller are to be strengthened. Particularly in case of flat bottoms additional longitudinal stiffeners are to be fitted above or forward of the propeller.

2.4 Strengthening of Bottom Forward

2.4.1 For the purpose of arranging floors and girders the bottom strengthening forward areas are defined:

forward of $\frac{x}{L} = 0.7$ for L ≤ 100 m.

forward of $\frac{x}{L} = 0.6 + 0.001L$ for 100 < L ≤ 150 m.

forward of $\frac{x}{L} = 0.75$ for L > 150 m.

2.4.2 In case of transverse framing, plate floors are to be fitted at every frame. Where the longitudinal framing system or the longitudinal girder system is adopted the spacing of plate floors may be equal to three transverse frame spaces.

2.4.3 The spacing of side girders in way of bottom strengthening forward shall not exceed the following:

Transverse framing : $\frac{L}{250} + 0.9 \le 1.4$ [m]

Longitudinal framing: two longitudinal frame spacing

2.4.4 Distances deviating from those defined in 2.4.2 and 2.4.3 may be accepted on the basis of direct calculations.

2.4.5 Within the areas defined in 2.4.1 any scalloping is to be restricted to holes for welding and for limbers.

2.4.6 The section modulus of transverse or longitudinal stiffeners is not to be less than:

$$W_S = 0.155 P_{SL} s_S \ell^2 k \qquad \text{[cm}^3\text{]}$$

P_{SL} = Slamming load [kN/m^2], as defined in Section 5, E.3,

Note: Excluding CSR Oil Tankers, for every oil tanker subject to Regulation 18 of MARPOL 73/78 Annex I, scantlings of the strengthening of bottom forward is to be based on the draft obtained by using segregated ballast tanks only.

ℓ = Unsupported span [m],

s_s = Spacing of stiffeners [m],

k = Material factor according to Section 3,A.

2.4.7 The shear area of the stiffeners is not to be less than:

$$A_S = 0.028 P_{SL} s_S (\ell - 0.5 s_S) k \qquad [cm^2]$$

The area of the welded connection has to be at least twice this value.

3. Double Bottom

3.1. General

3.1.1 On passenger ships and cargo ships other than tankers a double bottom shall be fitted extending from the collision bulkhead to the after peak bulkhead, as far as this is practicable and compatible with the design and proper working of the ship. For oil tankers see Section 28.

3.1.2 A double bottom need not be fitted in fore peak, after peak and watertight compartments used exclusively for the carriage of liquids, provided the safety of the ship in the event of bottom damage is not thereby damaged.

3.1.3 The arrangement of double bottom shall comply with Chapter II-1 of SOLAS as amended. Any part of the ship that is not fitted with a double bottom shall be capable of withstanding bottom damage in accordance with the related SOLAS regulations. See also Section 26.

3.1.4 The inner bottom shall be continued out to the ship's sides in such a manner as to protect the bottom to the turn of the bilge. Such protection is to be deemed satisfactory if the inner bottom is not lower at any part than a plane parallel with the keel line and which is located not less than a vertical distance h_{DB} measured from the keel line, as calculated by the formula given in 3.2.1.

3.1.5 Small wells for hold drainage may be arranged in the double bottom, their depth, however, shall be as small as practicable. A well extending to the outer bottom, may, however, be permitted at the after end of the shaft tunnel. Other wells may be permitted if their arrangement does not reduce the level of protection equivalent to that afforded by a double bottom complying with this sub-section. In no case shall the vertical distance from the bottom of such a well to a plane coinciding with the keel line be less than 500 mm.

3.1.6 The centre girder should be watertight at least for 0.5L amidships, unless the double bottom is subdivided by watertight side girders. On ships which are assigned the load line permissible for timber deck load, the double bottom is to be subdivided watertight by the centre girder or side girders as required by the ICLL.

3.1.7 For the double bottom structure of bulk carriers, see Section 27.

3.1.8 On request of the owner, the bottom structures of a ship which is expected to frequently touch ground whilst loading and discharging will be examined particularly. To fulfil this requirement, where the transverse framing system is adopted, plate floors are to be fitted at every frame and the spacing of the side girders is to be reduced to half the spacing as required according to 3.3.1.

When the longitudinal framing system is adopted, the longitudinal girder system according to 3.5.5 is to be applied.

The thickness of bottom plating is to be increased by 10%, compared to the plate thickness according to Section 7, B.2 to B.6.

3.2 Centre Girder

3.2.1 The depth of the centre girder is not to be less than:

$$h_{DB} = 50B \qquad [mm]$$

However, in no case is the value of h_{DB} to be less than 760 mm, and need not be taken as more than 2000

mm. The height shall be sufficient to give good access to all parts of the double bottom.

3.2.2 The thickness of the centre girder is not to be less than:

Within 0.7L amidships:

$$t_{GM} = \frac{h_{DB}}{h_{DBA}}\left(\frac{h_{DB}}{100} + 1.0\right)\sqrt{k} \text{ [mm] for } h_{DB} \le 1200 \text{ mm}$$

$$t_{GM} = \frac{h_{DB}}{h_{DBA}}\left(\frac{h_{DB}}{120} + 3.0\right)\sqrt{k} \text{ [mm] for } h_{DB} > 1200 \text{ mm}$$

h_{DB} = Depth of centre girder as calculated according to 3.2.1,

h_{DBA} = Depth of centre girder as built [mm] ($h_{DBA} \ge h_{DB}$).

t_{GM} shall not be less than t_G according to 3.5.5.

0.15L at the ends:

$$t_{GE} = 0.9 t_{GM} \quad \text{[mm]}$$

3.2.3 Lightening holes in the centre girder are generally permitted only outside 0.75L amidships. Their depth is not to exceed half the depth of the centre girder and their lengths are not to exceed half the frame spacing.

3.3 Side Girders

3.3.1 At least one side girder shall be fitted in the engine room and in way of 0.25L aft of F.P. In the other parts of the double bottom, one side girder shall be fitted where the horizontal distance between ship's side and centre girder exceeds 4.5 m. Two side girders shall be fitted where the distance exceeds 8 m, and three side girders where it exceeds 10.5 m. The distance of the side girders from each other and from centre girder and ship's side respectively shall not be greater than:

1.8 m. In the engine room within the engine seatings,

4.5 m. Where one side girder is fitted in the other parts of double bottom,

4.0 m. Where two side girders are fitted in the other parts of double bottom,

3.5 m. Where three side girders are fitted in the other parts of double bottom.

3.3.2 The thickness of the side girders is not to be less than:

$$t_G = \frac{h_{DB}^2}{120 h_{DBA}}\sqrt{k} \quad \text{[mm]}$$

The plate thickness of the side girders is not to be less than t_G according to 3.5.5.

For strengthening under the engine seating, see 4.2.3.

3.4 Transversely Framed Double Bottom

3.4.1 Plate Floors

3.4.1.1 It is recommended to fit plate floors at every frame in the double bottom if transverse framing is adopted.

3.4.1.2 Plate floors are to be fitted at every frame:

a) In way of strengthening of the bottom forward according to 2.4,

b) In the engine room,

c) Under boiler seatings.

3.4.1.3 Plate floors are to be fitted under bulkheads and corrugated bulkheads.

3.4.1.4 For the remaining part of the double bottom, the spacing of plate floors shall not exceed 3 metres.

3.4.1.5 The thickness of plate floors is not to be less than:

$$t_F = t_{GM} - 2.0\sqrt{k} \quad \text{[mm]}$$

t_{GM} = Thickness of centre girder according to 3.2.2.

The thickness need not exceed 16.0 mm.

3.4.1.6 The web sectional area of the plate floors is not to be less than:

$$A_{PF} = \varepsilon T \ell_B s_F \left(1 - \frac{2y}{\ell_B}\right) k \quad \text{[cm}^2\text{]}$$

s_F = Spacing of plate floors [m],

ℓ_B = Span between longitudinal bulkheads, if any [m],

= B, if longitudinal bulkheads are not fitted,

y = Distance between supporting point of the plate floor (ship's side, longitudinal bulkhead) and the section considered [m]. The distance y is not to be taken greater than $0.4\ell_B$.

ε = 0.5 for spaces which may be empty at full draught, e.g. machinery spaces, storerooms, etc.

= 0.3 elsewhere.

3.4.1.7 Where in small ships side girders are not required (see 3.3.1) at least one vertical stiffener is to be fitted at every plate floor; its thickness is to be equal to that of the floors and its depth of web at least 1/15 of the height of centre girder.

3.4.1.8 In way of strengthening of bottom forward according to 2.4, the plate floors are to be connected to the shell plating and inner bottom by continuous fillet welding.

3.4.1.9 For strengthening of floors in machinery spaces, see 4.2.2.

3.4.2 Watertight Floors

3.4.2.1 The thickness of watertight floors is not to be less than that required for tank bulkheads according to Section 12, B.2. In no case their thickness is to be less than required for plate floors according to 3.4.1.

3.4.2.2 The scantlings of stiffeners at watertight floors are to be determined according to Section 12, B.4.

3.4.3 Bracket Floors

3.4.3.1 Where plate floors are not required according to 3.4.1 bracket floors may be fitted.

3.4.3.2 Bracket floors consist of bottom frames at the shell plating and reversed frames at the inner bottom, attached to centre girder, side girders and ship's side by means of brackets.

3.4.3.3 The section modulus of bottom frames is not to be less than:

$$W_{BF} = 0.7Cs\ell^2(P_S + P_{WB})\,k \qquad [cm^3]$$

P_S = Still water pressure load on bottom [kN/m^2] according to Section 5, C.2.

P_{WB} = Wave pressure load on bottom [kN/m^2] according to Section 5, D.3.

C = 0.6 where struts according to 3.4.5 are provided at 0.5ℓ,

= 1.0 otherwise

s = Spacing of bottom frames [m],

ℓ = Unsupported span [m] disregarding struts, if any.

3.4.3.4 The section modulus of inner bottom frames is not to be less than:

$$W_{BF} = 0.55Cs\ell^2Pk \qquad [cm^3]$$

P = $P_{SI} + P_{DI}$

= P_T

= $10\,(T - h_{DB})$

P_T = $P_{ST} + P_{DT}$

= P_{T1}, P_{T2}, P_{T3}, P_{T4}, P_{T5}

the greatest value is to be used.

P_{SI} = Static load on the inner bottom [kN/m^2] according to Section 5, C.4.2.

P_{DI} = Dynamic load on the inner bottom [kN/m^2] according to Section 5, D.6.4.

P_{ST} = Static tank pressure load [kN/m^2] according to Section 5, C.3.

P_{DT} = Dynamic tank pressure load [kN/m^2] according to Section 5, D.8.1.

P_T = Design tank pressure load [kN/m^2] according to Section 5, C.3 and Section 5, D.8

3.4.4 Brackets

3.4.4.1 The brackets are, in general, to be of same thickness as the plate floors. Their breadth is to be 75 % of the depth of the centre girder as per 3.2. The brackets are to be flanged at their free edges, where the unsupported span of bottom frames exceeds 1 m or where the depth of floors exceeds 750 mm.

3.4.4.2 At the side girders, bottom frames and inner bottom frames are to be supported by flat bars having the same depth as the inner bottom frames.

3.4.5 Struts

The cross sectional area of the struts is to be determined according to D.3.2 analogously. The design force is to be taken as the following value:

$F = 0.5 P s \ell$ [kN]

$P = P_S + P_{WB}$

$= P_{SI} + P_{DI}$

$= P_T$

$= 10\,(T - h_{DB})$

$P_T = P_{ST} + P_{DT}$

$= P_{T1}, P_{T2}, P_{T3}, P_{T4}, P_{T5}$

the greatest value is to be used.

3.5 Longitudinally Framed Double Bottom

3.5.1 General

Where the longitudinal framing system changes to the transverse framing system, structural continuity or sufficient scarfing is to be provided for.

3.5.2 Bottom and Inner Bottom Longitudinals

3.5.2.1 The scantlings are to be calculated according to C.2.

3.5.2.2 Where bottom and inner bottom longitudinals are coupled by struts in the centre of their unsupported span, ℓ, their section modules may be reduced to 60 % of the values required by C.2. The scantlings of the struts are to be determined in accordance with 3.4.5.

3.5.3 Plate Floors

3.5.3.1 The floor spacing should, in general, not exceed 5 times the mean longitudinal frame spacing.

3.5.3.2 Floors are to be fitted at every frame as defined in 3.4.1.3 as well as in the machinery space under the main engine. In the remaining part of the machinery space, floors are to be fitted at every alternate frame.

3.5.3.3 Regarding floors in way of the strengthening of the bottom forward, 2.4 is to be observed. For ships intended for carrying heavy cargo, see Section 27.

3.5.3.4 The scantlings of floors are to be determined according to 3.4.1.5 and 3.4.1.6.

3.5.3.5 The plate floors are to be stiffened at every longitudinal by a vertical stiffener having the same scantlings as the inner bottom longitudinals. The depth of the stiffener need not exceed 150 mm. If necessary a strength check can be required.

3.5.4 Brackets

3.5.4.1 Where the ship's sides are framed transversely flanged brackets having the same thickness with the floors are to be fitted between the plate floors at every transverse frame, extending to the outer longitudinals at the bottom and inner bottom.

3.5.4.2 One bracket is to be fitted at each side of the centre girder between the plate floors where the plate floors are spaced not more than 2.5 m apart. Where the floor spacing is greater, two brackets are to be fitted.

3.5.5 Longitudinal Girder System

3.5.5.1 Where longitudinal girders are fitted instead of bottom longitudinals, the spacing of floors may be greater than permitted by 3.5.3.1, provided that adequate strength of the structure is proved.

3.5.5.2 The plate thickness of the longitudinal girders is not to be less than:

$t_G = (5.0 + 0.03L)\sqrt{k}$ [mm]

$t_G \geq 6.0\sqrt{k}$ [mm]

3.5.5.3 The longitudinal girders are to be examined for sufficient safety against buckling according to Section 3, C.

3.6 Double Bottom Tanks

3.6.1 Scantlings

Structures forming boundaries of double bottom tanks are to comply with the requirements of Section 12.

3.6.2 Fuel and Lubricating Oil Tanks

3.6.2.1 In double bottom tanks, oil fuel with a flash point (closed cup test) exceeding 60 ºC may be carried.

3.6.2.2 Where practicable, lubricating oil discharge tanks or circulating tanks shall be separated from the shell.

3.6.2.3 For the separation of oil fuel tanks from tanks for other liquids, see Section 12, A.6.

3.6.2.4 For air, overflow and sounding pipes, see Section 12, A.4.

3.6.2.5 Manholes for access to oil fuel double bottom tanks situated under cargo oil tanks are not permitted in cargo oil tanks or in the engine room see also Section 28.

3.6.2.6 The thickness of structures is not to be less than the minimum thickness according to Section 12, B.

3.6.2.7 If the tank top of the lubricating oil circulating tank is not arranged at the same level as the adjacent inner bottom, this discontinuity of the flow of forces has to be compensated by vertical and/or horizontal brackets.

The brackets shall be designed with a soft taper at the end of each arm. The thickness of the vertical brackets shall correspond to the thickness of the floor plates according to 4.2.2, the thickness of the horizontal brackets shall correspond to the tank top thickness of the circulating tank.

The brackets shall be connected to the ship structure by double-bevel welds according to Section 20, B.3.2.

3.6.3 Bilge wells

Bilge wells shall have a capacity of more than 0.2 m^3. Small holds may have smaller bilge wells. Bilge wells are to be separated from the shell.

3.6.4 Sea chests

3.6.4.1 The plate thickness of sea chests is not to be less than:

$$t = 12 s_S \sqrt{P_{BS} k} + t_K \qquad \text{[mm]}$$

s_S = Spacing of stiffeners [m]

P_{BS} = Blow out pressure at the safety valve [bar], not to be less than 2 bar.

3.6.4.2 The section modulus of sea chest stiffeners is not to be less than:

$$W = 56 s_S P_{BS} \ell^2 k \qquad [cm^3]$$

ℓ = Unsupported span of stiffeners [m]

3.6.4.3 The sea-water inlet openings in the shell are to be protected by gratings.

3.6.4.4 A cathodic corrosion protection with galvanic anodes made of zinc or aluminium is to be provided in sea chests with chest coolers. For the suitably coated plates a current density of 30 μA/m^2 is to be provided and for the cooling area a current density of 180 μA/m^2.

3.6.4.5 For welding of plates of sea chest constituting shell plating of ship, full penetration welding shall be applied.

3.7 Direct Calculation of Bottom Structures

3.7.1 General

3.7.1.1 Where deemed necessary, a direct calculation of bottom structures according to Section 4 may be required. Where it is intended to load the cargo holds unevenly (alternately loaded holds), this direct calculation is to be carried out.

3.7.1.2 For two or more holds arranged one behind the other; the calculation is to be carried out for the hogging as well as for the sagging condition.

3.7.2 Design Loads

Following design loads are to be considered for direct calculation of bottom structures;

for loaded holds:

$$P = P_{SI} + P_{DI} - P_S - P_{WB} \qquad [kN/m^2]$$

for empty holds:

$$P = P_S + P_{WB} \qquad [kN/m^2]$$

P_{SI} = Static load on the inner bottom [kN/m^2] according to Section 5, C.4.2.

P_{DI} = Dynamic load on the inner bottom [kN/m^2] according to Section 5, D.6.4.

P_S = Still water pressure load on bottom [kN/m^2] according to Section 5, C.2.

P_{WB} = Wave pressure load on bottom [kN/m^2] according to Section 5, D.3.

Where high density ore cargo is intended to be carried in the holds in a conical shape, in agreement with TL a corresponding load distribution on the inner bottom is to be used for the calculation.

Where the grillage system of the double bottom is subjected to single loads caused by containers, the stresses in the bottom structure are to be calculated for these single loads as well as for the bottom pressure load (P_S+P_{WB}). The permissible stresses specified therein are to be observed.

3.7.3 Permissible Stress Levels

The equivalent stress is not to exceed the following value:

$$\sigma_V = \frac{230}{k} \qquad [N/mm^2]$$

$$\sigma_V = \sqrt{\sigma_x^2 + \sigma_y^2 - \sigma_x \sigma_y + 3\tau^2}$$

σ_x = Stress in the ship's longitudinal direction [N/mm^2],

= $\sigma_L + \sigma_\ell$

= 0 for webs of transverse girders,

σ_y = Stress in the ship's transverse direction [N/mm^2],

= σ_q

= 0 for webs of longitudinal girders,

σ_L = Design hull girder bending stress [N/mm^2] according to Section 6, D (hogging or sagging, whichever condition is examined),

σ_ℓ = Bending stress [N/mm^2] in longitudinal direction in longitudinal girders,

σ_q = Bending stress [N/mm^2] in transverse direction in transverse girders,

τ = Shear stress in the longitudinal girders or transverse girders [N/mm^2].

The bending stresses and the shear stress alone are not to exceed the following values:

$$\sigma_\ell, \sigma_q = \frac{150}{k} \qquad [N/mm^2]$$

$$\tau = \frac{100}{k} \qquad [N/mm^2]$$

3.8 Buckling strength

The buckling strength of the double bottom structures is to be examined according to Section 3, C. For this purpose the design stresses according to Section 6, C and the stresses due to local loads are to be considered.

3.9 Testing for Tightness

Each compartment or tank of a double bottom is to be tested for tightness as specified in Section 12, H.

4. Bottom Structure in Machinery Spaces

4.1 Single Bottom

4.1.1 The scantlings of floors are to be determined according to 2.3.2 for the greatest span measured in the engine room.

4.1.2 The web depth of the plate floors in way of the engine foundation should be as large as possible. The depth of plate floors connected to web frames shall be similar to the depth of the longitudinal foundation girders. In way of the crank case, the depth shall not be less than $0.5h_F$. The web thickness is not to be less than:

$$t_F = \frac{h_F}{100} + 4 \quad \text{[mm]}$$

h_F = Depth of floor plates [m], as defined in 2.3.2.

4.2 Double Bottom

4.2.1 General

4.2.1.1 Lightening holes in way of the engine foundation are to be kept as small as possible with due regard, however, to accessibility. Where necessary, the edges of lightening holes are to be strengthened by means of face bars or the plate panels are to be stiffened.

4.2.1.2 Local strengthenings are to be provided beside the following minimum requirements, according to the construction and the local conditions.

4.2.2 Plate Floors

Plate floors are to be fitted at every frame. The floor thickness according to 3.4.1 is to be increased as follows:

$$3.6 + \frac{P_B}{500} \quad \text{[\%]}$$

minimum 5 per cent, maximum 15 per cent

P_B = Single engine output in [kW]

The thickness of the plate floors below web frames is to be increased in addition to the above provisions. In this case the thickness of the plate floors is not to be taken less than the web thickness according to C.1.6.2.1.

4.2.3 Side Girders

Side girders under foundation girders are to be extended into the adjacent spaces and to be connected to the bottom structure. This extension abaft and forward of the engine room bulkheads shall be two to four frame spacing if practicable.

4.2.4 Inner Bottom

Between the foundation girders, the thickness of the inner bottom plating required according to Section 7, B.7.1 is to be increased by 2 mm. The strengthened plate is to be extended beyond the engine seating by three to five frame spacing.

4.3 Machinery Seatings

See Section 19, B.1 and Table 19.1 for the rules applied to the bedplates and girders of machinery seatings.

5. Bow and stern thrusters

Note: The requirements given below shall only be applied for thrusters intended for manoeuvring aids, which are integrated in the ship structure and which are able to produce transverse thrust at very slow ship speeds. For thrusters which are used beyond that of short-term manoeuvring aids in harbours or estuaries, or use during canal passage, additional requirements may be defined by TL.

5.1 Unit wall thickness

The wall thickness of the unit is, in general, to be in accordance with the manufacturer's practice, but is to be not less than the thickness of the adjacent shell plating plus 10 per cent or 2 mm whichever is the greater, subject to a minimum of 7 mm.

5.2 Thruster unit installation details

The tunnel tube is to be fitted either between a pair of deep floors or bulkheads extending to above the design waterline or in a separate watertight compartment.

The shell plating thickness is to be locally increased by 50 per cent in way of tunnel thruster connections.

For welded tube connections the welding is to be by full penetration welding.

The tunnel tube is to be framed to the same standard as the surrounding shell plating.

The unit is to be adequately supported and stiffened.

Thrust element housing structures as holding fixtures for propulsion units are to be effectively connected to the tunnel structure.

Engine housing and supporting structures shall withstand the excitation in case propulsion engine is directly supported by ship structure.

If suction or draining ducts are arranged in the ship's bottom the design bottom slamming pressure P_{SL} according to Section 5, E.3 is to be considered.

5.3 Welding details

All welding of structural elements which are part of the watertight integrity of the ship hull are generally to be carried out as welds with full root penetration, according to Section 20, B (see also Section 20, Figure 20.8). In certain circumstances HV- or DHV-welds with defined incomplete root penetration according to Section 20, B (see also Section 20, Figure 20.9) may be used for lightly loaded structural elements for which the risk of damage is low.

If the gear housing is supported in the vicinity of the propeller hub, the support bracket is to be connected to the tunnel by HV- or DHV-welds with full root penetration. The transition is to be grinded notch-free. The radius R of the transition welding in the following figure is not to be less than determined by the following formula:

$$R = 3 + 0.7 \times ts \times \cos(AW - 45°)\ [mm]$$

t_s : thickness [mm] of the gear housing support bracket

AW : angle [°] between tunnel and gear housing support bracket

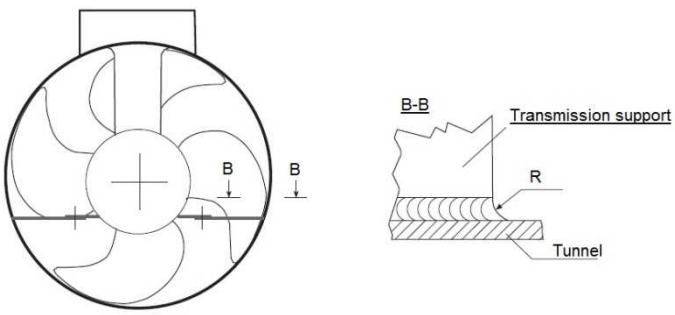

Connection between gear housing support bracket and thruster tunnel

5.4 Thruster grids

For ships with ice class notation see also Section 14 D.11

For performing of in water surveys of manoeuvring equipment, such as bow thrusters the requirements stated in Section 25 will be specially considered taking into account their design.

6. Docking Calculation

A special calculation of the docking forces is required for;

- Ships exceeding 120 m. in length,
- Ships of special design, particularly in the aft body, and
- Ships with a docking load of more than 700 kN/m

The proof of sufficient strength can be performed either by a simplified docking calculation or by a direct docking calculation. The number and arrangement of the keel blocks must agree with the submitted docking plan. Direct calculations are required for ships with unusual overhangs at the ends or with inhomogeneous distribution of cargo.

6.1 Simplified Docking Calculation

The local forces of the keel blocks acting on the bottom structures can be calculated in a simplified manner using the nominal keel block load q_0. Based on these forces sufficient strength must be shown for all structural bottom elements which may be influenced by the keel block forces.

The nominal keel block load q_0 is calculated as follows, see also Figure 8.1:

$$q_0 = \frac{G_S C}{L_{KB}} \qquad [kN/m]$$

G_S = Ship weight during docking [kN],

L_{KB} = Length of the keel block range [m]; i.e in general the length of the horizontal flat keel,

C = Weighting factor,

= 1.25 in general,

= 2.0 in the following areas:

- Within $0.075L_{KB}$ from both ends of the length L_{KB},
- Below the main engine,
- In way of the transverse bulkheads along a distance of 2 x distance of plate floors adjacent to the transverse bulkheads [m] (no value larger than 1 m needs to be taken), and
- In way of gas tank support of gas tankers,

If a longitudinal framing system is used in the double bottom in combination with a centre line girder in accordance with 3.2, it may be assumed that the centre line girder carries 50% of the force and the two adjacent keel block longitudinal 25% each.

6.2 Direct Docking Calculation

If the docking block forces are determined by direct calculation, e.g. by a finite element calculation, considering the stiffness of the ship's body and the weight distribution, the ship has to be assumed as elastically bedded at the keel blocks. The stiffness of the keel blocks has to be determined including the wood layers.

If a floating dock is used, the stiffness of the floating dock are to be taken into consideration.

6.3 Permissible Stress

The permissible equivalent stress for docking calculations is to be taken as:

$$\sigma_V = \frac{R_{eH}}{1.05} \qquad [N/mm^2]$$

R_{eH} = Minimum nominal upper yield point [N/mm^2], as defined in Section 3, A.

6.4 Buckling Strength

The bottom structures are to be examined according to Section 3, C. For this purpose a safety factor S=1.05 has to be applied.

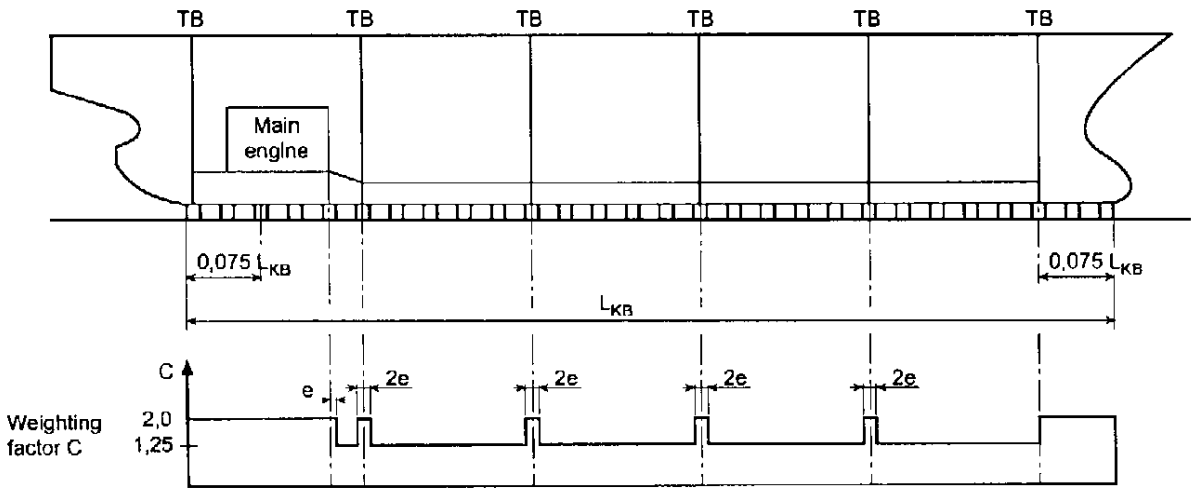

TB : Transverse Bulkhead

Figure 8.1 Load on keel blocks

C. Framing System

1. Transverse Framing

1.1 Frame Spacing

Forward of the collision bulkhead and aft of the after peak bulkhead, the frame spacing shall, in general, not exceed 600 mm.

1.2 Main Frames

1.2.1 Scantlings

1.2.1.1 The section modulus of the main frames including end attachments is not to be less than:

$$W_R = nCs\ell^2 Pc_R k \qquad [cm^3]$$

s = Spacing of main frames [m],

ℓ = Length of unsupported span [m] according to Section 3, B, see also Figure 8.2. Not to be taken less than 2.0 m,

n = $0.9 - 0.0035L$ for L < 100 m.

= 0.55 for L ≥ 100 m.

C = $1.0 - \left(\frac{\ell_{Ku}}{\ell} + 0.4\frac{\ell_{Ko}}{\ell}\right) \geq 0.6$

ℓ_{Ku} = Length of lower bracket connection of main frames within the length ℓ [m], see Figure 8.2,

ℓ_{Ko} = Length of upper bracket connection of main frames within the length ℓ [m], see Figure 8.2,

P = Load on ship's sides (P_S+P_{WS}), bow structures (P_{IB}), or stern structures (P_{IS}) as the case may be,

P_S = Static pressure load on ship's sides [kN/m^2] according to Section 5, C.2,

P_{WS} = Wave pressure load on ship's sides [kN/m^2] according to Section 5, D.2,

P_{IB} = Impact load on bow structures [kN/m^2] according to Section 5, E.1,

P_{IS} = Impact load on stern structures [kN/m^2] according to Section 5, E.2,

c_R = Factor for curved frames,

= $1.0 - 2\frac{h_C}{\ell}$, not to be taken less than 0.75

h_C = Maximum height of curve,

k = Material factor according to Section 3, A.

Within the lower bracket connection the section modulus is not to be less than the value obtained for C = 1.0.

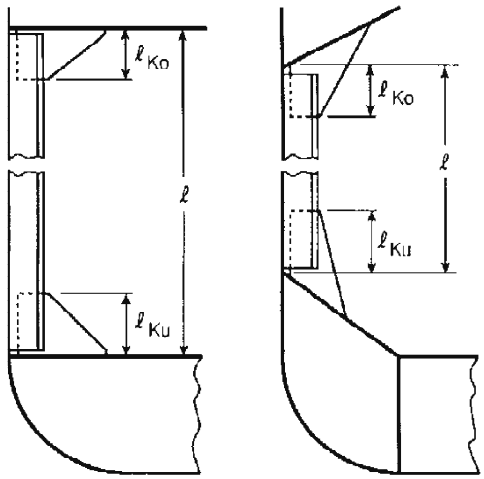

Figure 8.2 Unsupported span of transverse frames

1.2.1.2 The shear area of the main frames including end attachments is not to be less than:

upper end shear area:

$$A_{R0} = 0.04\left(1 - 0.817m_a\right)s\ell Pk \qquad [cm^2]$$

lower end shear area:

$$A_{RU} = 0.07\left(1 - 0.817m_a\right)s\ell Pk \qquad [cm^2]$$

m_a = $0.204\frac{s}{\ell}\left[4 - \left(\frac{s}{\ell}\right)^2\right]$ where $\frac{s}{\ell} \leq 1$

P = Load on ship's sides (P_S+P_{WS}), bow structures (P_{IB}), or stern structures (P_{IS}) as the case may be,

1.2.1.3 In ships with more than 3 decks the main frames are to extend at least to the deck above the lowest deck.

1.2.1.4 The scantlings of the main frames are not to be less than those of the tween deck frames above.

1.2.1.5 Where the scantlings of the main frames are determined by direct strength calculations, the following permissible stresses are to be observed:

bending stress : $\sigma_b = \frac{150}{k}$ [N/mm^2]

shear stress : $\tau = \frac{100}{k}$ [N/mm^2]

equivalent stress: $\sigma_V = \sqrt{\sigma_b^2 + 3\tau^2} = \frac{180}{k}$ [N/mm^2]

1.2.1.6 Forces due to lashing arrangements acting on frames are to be considered when determining the scantlings of the frames.

1.2.1.7 For main frames in holds of bulk carriers see also Section 27, B.6.2.

1.2.2 Frames in Tanks

1.2.2.1 The section modulus of frames in tanks or in hold spaces for ballast water is not to be less than the following value:

$W_{FT} = 0.55 s \ell^2 P_T c_R k$ [cm^3]

$P_T = P_{ST} + P_{DT}$
$= P_{T1}, P_{T2}, P_{T3}, P_{T4}, P_{T5}$

P_{DT} = Dynamic tank pressure load [kN/m^2] as defined in Section 5, D.8,

P_{ST} = Static tank pressure load [kN/m^2] as defined in Section 5, C.3,

P_T = Design tank pressure load [kN/m2] according to Section 5, C.3 and Section 5, D.8

1.2.2.2 The shear area of frames in tanks or in hold spaces for ballast water is not to be less than:

$A_{FT} = 0.05(1 - 0.817 m_a)\, s \ell P_T\, k$ [cm^2]

1.2.3 End Attachment

1.2.3.1 The lower bracket attachment to the bottom structure is to be determined according to Section 3, B.4.2 on the basis of the main frame section modulus.

1.2.3.2 The upper bracket attachment to the deck structure and/or to the tween deck frames is to be determined according to Section 3, B.4.2 on the basis of the section modulus of the deck beams or tween deck frames whichever is the greater.

1.2.3.3 Where frames are supported by a longitudinally framed deck, the frames fitted between web frames are to be connected to the adjacent longitudinals by brackets. The scantlings of the brackets are to be determined in accordance with Section 3, B.4.2 on the basis of the section modulus of the frames.

1.3 Tween Deck and Superstructure Frames

1.3.1 General

In ships having a speed exceeding $V = 1.6\sqrt{L}$ [kn], the forecastle frames forward of 0.1L from F.P. are to have at least the same scantlings as the frames located between the first and the second deck.

Where further superstructures or big deckhouses are arranged on the superstructures strengthening of the frames of the space below may be required.

For tween deck frames in tanks, the requirements for the section modulus W according to 1.2.2.1 is to be observed.

1.3.2 Scantlings

1.3.2.1 The section modulus W_T and shear area A_T of the tween deck and superstructure frames are not to be less than:

$W_T = 0.55 s \ell^2 P c_R k$ [cm^3]

$A_T = 0.05(1 - 0.817 m_a) s \ell P k$ [cm^2]

P is not to be taken less than:

$$P_{min} = 0.4\left(P_{SC} + P_{DC}\right)\left(\frac{b}{\ell}\right)^2 \qquad [kN/m^2]$$

P_{DC} = Dynamic cargo load [kN/m^2] as defined in Section 5, D.6.

P_{SC} = Static cargo load [kN/m^2] as defined in Section 5, C.4.

b = Unsupported span of the deck beam below the respective tween deck frame [m].

For tween deck frames connected at their lower ends to the deck transverses, P_{min} is to be multiplied by the factor:

$$f_1 = 0.75 + 0.2\frac{e_W}{s} \geq 1.0$$

e_W = Spacing of web frames [m]

1.3.3 End Attachment

Tween deck and superstructure frames are to be connected to the main frames below, or to the deck. The end attachment may be carried out in accordance with Figure 8.3.

For tween deck and superstructure frames 1.2.3.3 is to be observed, where applicable.

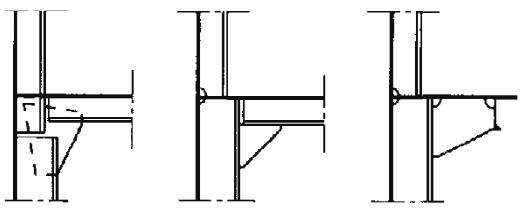

Figure 8.3 Typical end attachments of tween deck and superstructure frames

1.4 Peak Frames and Frames in Way of the Stern

1.4.1 Peak Frames

1.4.1.1 Section modulus W_P and shear area A_P of the peak frames is not to be less than:

$$W_P = 0.55 s \ell^2 P c_R k \qquad [cm^3]$$

$$A_P = 0.05\left(1 - 0.817 m_a\right) s \ell P k \qquad [cm^2]$$

P = Load on ship's sides (P_S+P_{WS}), bow structures (P_{IB}), or stern structures (P_{IS}) as the case may be,

1.4.1.2 Where the length of the forepeak does not exceed 0.06L the section modulus required at half forepeak length may be maintained throughout the entire forepeak.

1.4.1.3 The peak frames are to be connected to the stringer plates to ensure sufficient transmission of shear forces.

1.4.1.4 Ships not exceeding 30 m. in length are to have peak frames having the same section modulus as the main frames.

1.4.1.5 Where peaks are to be used as tanks, the section modulus of the peak frames is not to be less than required by 1.2.2.1.

1.4.2 Frames in way of the Stern

1.4.2.1 The frames in way of the cruiser stern arranged at changing angles to the transverse direction are to have a spacing not exceeding 600 mm. and are to extend up to the deck above peak tank top maintaining the scantlings of the peak frames.

1.4.2.2 An additional stringer may be required outside the after peak where frames are inclined considerably and not fitted vertically to the shell.

1.5 Strengthenings in Fore and Aft Body

1.5.1 General

In the fore body, i.e. from the forward end to 0.15L behind F.P. flanged brackets have to be used in principle.

As far as practicable and possible, tiers of beams or web frames and stringers are to be fitted in the fore- and after peak.

1.5.2 Tiers of Beams

1.5.2.1 Forward of the collision bulkhead, tiers of beams (beams at every other frame) generally spaced no more than 2.6 m. apart, measured vertically, are to be arranged below the lowest deck within the forepeak. Stringer plates are to be fitted on the tiers of beams which are to be connected by continuous welding to the shell plating and by a bracket to each frame. The scantlings of the stringer plates are to be determined from the following formula:

width $b = 75\sqrt{L}$ [mm]

thickness $t = 6.0 + \frac{L}{40}$ [mm]

1.5.2.2 The cross sectional area of each beam is to be determined according to D.3.2 for a load

$F_L = PA_B$ [kN]

A_B = Load area of a beam [m^2].

P = Load on ship's sides (P_S+P_{WS}), bow structures (P_{IB}), or stern structures (P_{IS}) as the case may be,

1.5.2.3 In the after peak, tiers of beams with stringer plates generally spaced 2.6 m. apart, measured vertically, are to be arranged as required under 1.5.2.1, as far as practicable with regard to the ship's shape.

1.5.2.4 Intermittent welding at the stringers in the after peak is to be avoided. Any scalloping at the shell plating is to be restricted to holes required for welding and for limbers.

1.5.2.5 Where peaks are used as tanks, stringer plates are to be flanged or face bars are to be fitted at their inner edges. Stringers are to be effectively fitted to the collision bulkhead so that the forces can be properly transmitted.

1.5.2.6 Where perforated decks are fitted instead of tiers of beams, their scantlings are to be determined as for wash bulkheads according to Section 12, G. The requirements regarding cross sectional area stipulated in 1.5.2.2 are, however, to be complied with.

1.5.3 Web Frames and Stringers

1.5.3.1 Where web frames and supporting stringers are fitted instead of tiers of beams, their scantlings are to be determined as follows:

Section modulus:

$W_W = 0.55 e_W \ell^2 P n_C k$ [cm^3]

Web shear area at the supports:

$A_W = 0.05 e_W \ell_1 P k$ [cm^2]

ℓ = Unsupported span in [m], without consideration of cross ties, if any,

ℓ_1 = Similar to ℓ, however, considering cross ties, if any,

P = Load on ship's sides (P_S+P_{WS}), bow structures (P_{IB}), or stern structures (P_{IS}) as the case may be,

n_C = Coefficient according to the following Table 8.1.

Table 8.1 Reduction coefficient n_C

Number of cross ties	n_C
0	1.0
1	0.5
3	0.3
≥ 3	0.2

1.5.3.2 Vertical transverses are to be interconnected by cross ties the cross sectional area of which is to be determined according to 1.5.2.2.

1.5.3.3 Where web frames and stringers in the fore body are dimensioned by strength calculations the stresses must not exceed the permissible stresses in 1.2.1.5.

1.5.4 Web Frames and Stringers in Tween Decks and Superstructure Decks

Where the speed of the ship exceeds $V = 1.6\sqrt{L}$ [kn]

or in ships where the bow flare angle, measured in the ship's transverse direction and related to the vertical plane, exceeds 40° stringers and transverses according to 1.5.3 are to be fitted within 0.1L from forward perpendicular in tween deck spaces and superstructures. The spacing of the stringers and transverses is not to be taken less than 2.8 m.

1.5.5 Tripping Brackets

1.5.5.1 Between the point of greatest breadth of the ship at maximum draught and the collision bulkhead tripping brackets spaced not more than 2.6 m., measured vertically, according to Figure 8.4 are to be fitted. The thickness of the brackets is to be determined according to 1.5.2.1. Where proof of safety against tripping is provided tripping brackets may partly or completely be dispensed with.

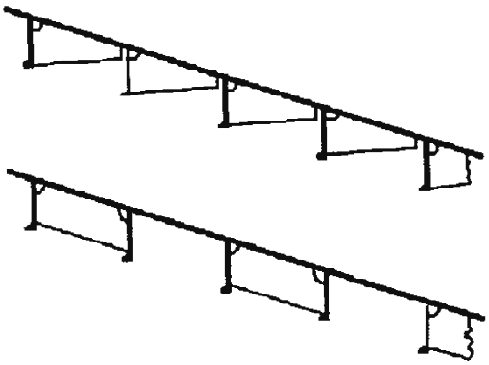

Figure 8.4 Tripping brackets

1.5.5.2 In the same range, in tween deck spaces and superstructures of 3 m. and more in height, tripping brackets according to 1.5.5.1 are to be fitted.

1.5.5.3 Where peaks or other spaces forward of the collision bulkhead are intended to be used as tanks, tripping brackets according to 1.5.5.1 are to be fitted between tiers of beams or stringers.

1.5.5.4 For ice strengthening, see Section 14.

1.6 Web Frames in Machinery Spaces

1.6.1 Arrangement

1.6.1.1 In the engine and boiler room, web frames are to be fitted. Generally, they should extend up to the uppermost continuous deck. They are to be spaced not more than 5 times the frame spacing in the engine room.

1.6.1.2 For combustion engines the web frames shall generally be fitted at the forward and aft ends of the engine. The web frames are to be evenly distributed along the length of the engine.

1.6.1.3 Where combustion engines are fitted aft, stringers spaced 2.6 m. apart are to be fitted in the engine room, in alignment with the stringers in the after peak, if any. Otherwise the main frames are to be adequately strengthened. The scantlings of the stringers shall be similar to those of the web frames. At least one stringer is required where the depth up to the lowest deck is less than 4 m.

1.6.1.4 For the bottom structure in machinery spaces, see B.4.

1.6.2 Scantlings

1.6.2.1 The section modulus of web frames is not to be less than:

$$W_W = 0.8 e_W \ell^2 \left(P_S + P_{WS}\right) k \qquad [cm^3]$$

The moment of inertia of web frames is not to be less than:

$$I_W = 100 D C_i (4.5D - 3.5) \quad [cm^4] \quad \text{for} \quad 3 \le D \le 10$$

$$I_W = 100 D C_i (7.25D - 31) \quad [cm^4] \quad \text{for} \quad D > 10$$

$$C_i = 1 + 0.07(D_U - 4)$$

D = Ship's depth [m], as defined in Section 1, H.2,

D_U = Depth up to the lowest deck [m]

The scantlings of the webs are to be calculated as follows:

depth $h_W = 50D \ge 250$ [mm],

thickness $t_W = \dfrac{h_W}{(32 + 0.03 h_W)} \ge 8.0$ [mm]

1.6.2.2 Ships with a depth of less than 3 m. are to have web frames with web scantlings not less than 250 x 8 mm and a minimum face sectional area of 12 cm^2.

1.6.2.3 In very wide engine rooms it is recommended to provide side longitudinal bulkheads.

2. Bottom, Side and Deck Longitudinals, Side Transverses

2.1 General

2.1.1 Longitudinals shall preferably be continuous through floor plates and transverses. Attachments of their webs to the webs of floor plates and transverses shall be such that the reaction forces of support will be transmitted. The permissible shear stress of 100/k [N/mm^2] is not to be exceeded.

For longitudinal frames and beams, sufficient fatigue strength according to Section 3, D is to be demonstrated.

Ahead of 0.1L from FP webs of longitudinals are to be connected effectively at both ends. If the flare angle is more than 40º additional heel stiffeners or brackets are to be arranged.

2.1.2 Where longitudinals abut at transverse bulkheads or webs, brackets are to be fitted. Within the upper and lower hull flange, the sectional area of the bracket at the bulkheads is to be 1.25 times the sectional area of the longitudinal. The length of the weld connecting brackets and longitudinals is to be about twice the depth of the section so that the cross sectional area of the welded joint is at least 1.5 times that of the section. Consideration may be given to equivalent designs.

2.1.3 Outside the upper and the lower hull flange, the cross sectional areas stipulated in 2.1.2 may be reduced by 20 per cent.

2.1.4 Where longitudinals are sniped at watertight floors and bulkheads, they are to be attached to the floors by brackets of the thickness of plate floors, and with a length of weld at the longitudinals equal to 2 x depth of the bottom longitudinals. (For longitudinal framing systems in double bottoms, see B.3.5)

2.1.5 For buckling strength of longitudinals see Section 3, C.

2.2 Design Load for Longitudinals

2.2.1 Design load for bottom longitudinals due to the external pressure is to be taken as:

$$P = P_S + P_{WB} \qquad [kN/m^2]$$

P_S = Still water pressure load on bottom [kN/m^2] according to Section 5, C.2,

P_{WB} = Wave pressure load on bottom [kN/m^2] according to Section 5, D.3.

2.2.2 Design load for bottom longitudinals due to tank pressure need not to be taken greater than:

$$P = P_T - \left[10T_{MIN} - \left(P_S + P_{WB}\right)\right] \qquad [kN/m^2]$$

P_T = $P_{ST} + P_{DT}$
= P_{T1} , P_{T2} , P_{T3} , P_{T4} , P_{T5}

T_{MIN} = Smallest ballast draught [m],

P_{DT} = Dynamic tank pressure load [kN/m^2] as defined in Section 5, D.8.1,

P_{ST} = Static tank pressure load [kN/m^2] as defined in Section 5, C.3.

P_T = Design tank pressure load [kN/m^2] as defined in Section 5, C.3 and Section 5, D.8

2.2.3 Design load for longitudinals at decks and at ship's sides, at longitudinal bulkheads and inner bottom in way of tanks is to be taken as:

$$P = P_T \qquad [kN/m^2]$$

2.2.4 Design load due to tank pressure for side longitudinals below T_{MIN} need not to be taken greater than:

$$P = P_T - \left[10\left(T_{MIN} - z\right) - \left(P_S + P_{WS}\right)\right] \qquad [kN/m^2]$$

z = Distance of structure above baseline [m]

2.2.5 Design load for side longitudinal due to the external pressure is to be taken as load on ship's sides ($P_S + P_{WS}$), bow structures (P_{IB}), or stern structures (P_{IS}) as the case may be.

P_{IB} = Impact load on bow structures [kN/m^2] according to Section 5, E.1,

P_{IS} = Impact load on stern structures [kN/m^2] according to Section 5, E.2.

2.2.6 Design load for longitudinals at ship's sides, at longitudinal bulkheads in tanks intended to be partially filled is to be taken as:

$$P = P_T \qquad [\text{kN/m}^2]$$

2.2.7 Design load for deck longitudinals of the strength deck is to be taken as:

$$P = P_{WD} \qquad [\text{kN/m}^2]$$

P_{WD} = Wave load on weather deck [kN/m^2] as defined in Section 5, D.4.1.

2.2.8 Design load for deck longitudinals of the exposed decks which are not to be treated as strength deck is to be taken as:

$$P = P_{DE} \qquad [\text{kN/m}^2]$$

P_{DE} = Wave load on exposed decks [kN/m^2] as defined in Section 5, D.5.

2.2.9 Design load for longitudinals of cargo decks and for inner bottom longitudinal is to be taken as:

$$P = P_{SI} + P_{DI} \qquad [\text{kN/m}^2]$$

P_{SI} = Static load on the inner bottom [kN/m^2] according to Section 5, C.4.2,

P_{DI} = Dynamic load on the inner bottom [kN/m^2] according to Section 5, D.6.4.

2.3 Scantlings of Longitudinals and Longitudinal Beams

2.3.1 Section modulus W_ℓ and shear area A_ℓ of longitudinals and longitudinal beams of the strength deck are not to be less than:

$$W_\ell = \frac{83.3}{\sigma_P} m s \ell^2 P \qquad [\text{cm}^3]$$

$$A_\ell = 0.05\left(1 - 0.817 m_a\right) s \ell P k \qquad [\text{cm}^2]$$

k = Material factor according to Section 3, A.

ℓ = Unsupported span [m] according to Section 3, B. See also Figure 8.5.

m = $m_K^2 - m_a^2 \geq \frac{m_K^2}{2}$

m_a = $0.204 \frac{s}{\ell}\left[4 - \left(\frac{s}{\ell}\right)^2\right]$ where $\frac{s}{\ell} \leq 1$

m_K = $1 - \frac{\ell_{KI} + \ell_{KJ}}{1000\ell}$

ℓ_{KI}, ℓ_{KJ} = Effective supporting length [mm] due to heel stiffeners and brackets at frame I and J see Figure 8.5.

ℓ_k = $h_s + 0.3h_b + \frac{1}{c_1} \leq \ell_b + h_s$

c_1 = $\frac{1}{\ell_b - 0.3h_b} + \frac{c_2\left(\ell_b - 0.3h_b\right)}{h_e^2}$

$1/c_1$ is to be taken zero for $\ell_b \leq 0.3h_b$

ℓ_b, h_b = Dimensions of the brackets [mm], see Figure 8.5,

h_s = Height of the heel stiffener [mm] , see Figure 8.5,

h_e = Height of bracket [mm] in the distance $x_\ell = h_s + 0.3h_b$ of frame I and J respectively,

c_2 = 3 in general,

c_2 = 1 for flanged brackets see Figure 8.5(c).

If no heel stiffeners or brackets are arranged the respective values are to be taken as h_s=0, h_b=0, $1/c_1$=0, as shown in Figure 8.5 (d).

The permissible stress σ_P is to be determined according to the following formulae:

$$\sigma_P = \sigma_{perm} - |\sigma_L| \le \frac{150}{k} \qquad [N/mm^2]$$

$$\sigma_{perm} = \left(0.8 + \frac{L}{450}\right)\frac{R_{eH}}{k} \qquad [N/mm^2]$$

$$\sigma_{permmax} = \frac{R_{eH}}{k} \qquad [N/mm^2]$$

σ_L = Axial stress in the profile considered [N/mm^2] according to Section 6, D.

Where σ_L values are not specified by designer, following may be taken as a first approximation.

For bottom:

$$\sigma_{LB} = 12{,}6 \cdot \frac{\sqrt{L}}{k} \left[N/mm^2\right] \qquad \text{for } L < 90 \text{ m.}$$

$$\sigma_{LB} = \frac{120}{k} \left[N/mm^2\right] \qquad \text{for } L \ge 90 \text{ m.}$$

For side:

$$\sigma_{LS} = 0.76 \cdot \sigma_{LB} \left[N/mm^2\right]$$

For deck:

$$\sigma_{LD} = 1.25 \cdot \sigma_{LB} \left[N/mm^2\right]$$

For side longitudinals W_ℓ and A_ℓ shall not be less than :

$$W_{\ell min} = \frac{83}{\sigma_{permmax} - |\sigma_L|} m s \ell^2 \left(P_S + P_{WS}\right) \qquad [cm^3]$$

$$A_{\ell min} = 0.037\left(1 - 0.817 m_a\right) s \ell \left(P_S + P_{WS}\right) k \qquad [cm^2]$$

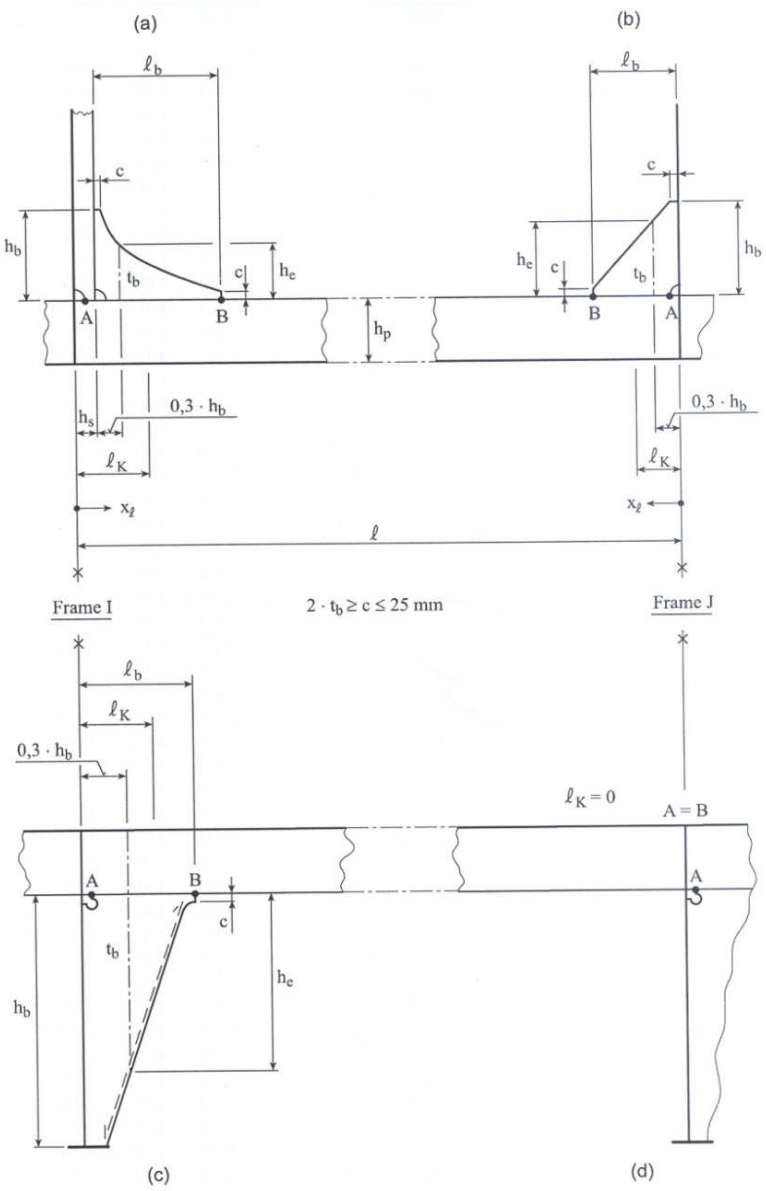

Figure 8.5 End attachment

For fatigue strength calculations according to Section 3.D Table 3.25, bending stresses due to local stiffener bending and longitudinal normal stresses due to global hull girder bending are to be combined. Bending stresses from local stiffener bending due to lateral loads P can be calculated as follows:

$$\sigma_A = \frac{83ms\ell^2 P}{W_a} + \sigma_h \quad [N/mm^2] \quad \text{for} \quad 0 \le x_\ell \le \ell_k$$

$$\sigma_B = \sigma_A m_1 \quad [N/mm^2] \quad \text{for} \quad x_\ell = h_s + \ell_b$$

W_a = Section modulus of the profile [cm^3] including effective plate width according to Section 3, B.5.

σ_h = Additional stress for fatigue strength according to Section 3, D.

m_1 = $1 - 4c_3(1 - 0.75c_3)$

for position B at I $\quad c_{3I} = \dfrac{h_{sI} + \ell_{bI} - \ell_{KI}}{1000\ell m_K}$

for position B at J $\quad c_{3J} = \dfrac{h_{sJ} + \ell_{bJ} - \ell_{KJ}}{1000\,\ell m_K}$

The stresses at point A shall not be less than the stresses in adjacent fields (aft of frame I and forward of frame J respectively).

In way of curved shell plates (e.g. in the bilge area) section modulus $W_{\ell min}$ shear area $A_{\ell min}$ and stress σ_B can be reduced by the factor C_R.

$$C_R = \frac{1}{1 + \dfrac{s\ell^4 t}{0.006 I_a R^2}}$$

t = thickness of shell plating [mm],

I_a = moment of inertia of the longitudinal frame [cm^4], including effective width,

R = bending radius of the plate [m].

2.3.2 In tanks, the section modulus is not to be less than W according to Section 12, B.4.1.

2.3.3 Where the scantlings of longitudinals are determined by strength calculations, the total stress comprising local bending and normal stresses due to longitudinal hull girder bending is not to exceed the total stress value σ_{perm} as defined in 2.3.1.

2.3.4 For a fatigue strength analysis as per Section 3, D additional stresses due to the use of non-symmetrical sections are to be considered which may be determined by the procedure outlined in Section 3, B.10.

2.3.5 Where necessary, for longitudinals between transverse bulkheads and side transverses additional stresses resulting from the deformation of the side transverses are to be taken into account.

If no special verification of stresses due to web frame deformations is carried out, the following minimum values are to be considered for fatigue strength verification of side longitudinals:

$$\sigma_{DF} = \pm 0.1 \frac{h_{WI}}{\ell - \sum \ell_b} \left[\frac{\ell_R}{DF} C_P (1 - C_P) \right]^2 \quad [N/mm^2]$$

h_{WI} = Web height of profile I [mm] see Section 3, Figure 3.12,

$\Sigma\ell_b$ = $(h_{sI} + \ell_{bI} + h_{sJ} + \ell_{bJ})10^{-3}$ [m]

see Figure 8.6,

ℓ_R = Unsupported web frame length [m], see Figure 8.6,

DF = Height of web frame [m] see Figure 8.6,

C_P = Weighting factor regarding location of the profile,

$$= \frac{(z - z_{Ro})/\ell_R + C_T}{1 + 2C_T}$$

z_{Ro} = z – coordinate of web frame outset above basis [m] see Figure 8.6, $z_{Ro} < T$

C_T = Correction regarding location of the profile I to the waterline.

$$= 1.1 - \frac{z}{T} \qquad 0 \le C_T \le 0.1$$

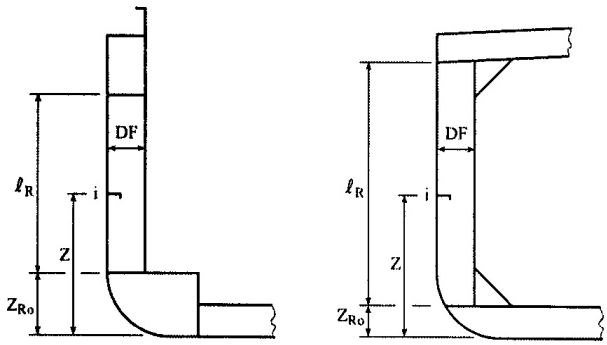

Figure 8.6 Definitions

2.3.6 Where struts are fitted between bottom and inner bottom longitudinals, see B.3.5.2.

2.3.7 For scantlings of side longitudinals in way of those areas which are to be strengthened against loads due to harbour and tug manoeuvres see Section 7, C.6.

2.3.8 In the fore body where the flare angle is more than 40º and in the after body where the flare angle is more than 75º the unsupported span of the longitudinal located above T_{MIN}-C_W must not be larger than 2.6 m. Otherwise tripping brackets according to C.1.5.5 are to be arranged. For C_W see Section 5, B.2.

2.3.9 The side shell longitudinals within the range from 0.5 m below the minimum draught up to 2.0 m above the maximum draught and a waterline breadth exceeding 0,97B are to be examined for sufficient strength against berthing impacts. The force induced by a fender into the side shell may be determined by:

$$P_f = 0.08\Delta \quad [kN] \qquad 0 < \Delta \le 2100 \quad [t]$$

$$P_f = 170 \quad [kN] \qquad 2100 < \Delta \le 17000 \quad [t]$$

$$P_f = 0.01\Delta \quad [kN] \qquad \Delta > 17000 \quad [t]$$

Δ = Displacement of the ship [t]

Δ_{max} = 100 000 t

2.3.10 In order to withstand the load P_f the section modulus W_ℓ of side shell longitudinals are not to be less than:

$$W_\ell = \frac{kM_f}{235}10^3 \qquad [cm^3]$$

k = Material factor, according to Section 3, A.

M_f = Bending moment,

$$= \frac{P_f}{16}(\ell - 0.5) \qquad [kNm]$$

ℓ = Unsupported length [m].

2.4 Side Transverses

2.4.1 Section modulus W and shear area A_W of side transverses supporting side longitudinals are not to be less than:

$$W = 0.55 e_W \ell^2 Pk \qquad [cm^3]$$

$$A_W = 0.05 e_W \ell Pk \qquad [cm^2]$$

2.4.2 Where the side transverses are designed on the basis of strength calculations the following stresses are not to be exceeded:

$$\sigma_b = \frac{150}{k} \qquad [N/mm^2]$$

$$\tau = \frac{100}{k} \qquad [N/mm^2]$$

$$\sigma_V = \sqrt{\sigma_b^2 + 3\tau^2} \le \frac{180}{k} \qquad [N/mm^2]$$

Side transverses and their supports (e.g. decks) are to be checked according to Section 3, C with regard to their buckling strength.

In the fore body where flare angles are larger than 40º the web in way of the deck beam has to be stiffened.

2.4.3 In tanks the web thickness shall not be less than the minimum thickness according to Section 12, B.2,

and the section modulus and the cross sectional area are not to be less than W and A_W according to Section 12, B.4.

2.4.4 The webs of side transverses within the range from 0.5 m. below the minimum draught up to 2 m above the maximum draught and a waterline breadth exceeding 0.9B are to be examined for sufficient buckling strength against berthing impacts. The force induced by a fender into the web frame may be determined as in 2.3.9

2.4.5 In order to withstand the load P_f on the web frames, the following condition has to be met:

$$P_f \le P_{fu}$$

P_f = See 2.4.4.

P_{fu} = $t_S^2\sqrt{R_{eH}}\left(0.27 + C\right)$ [kN]

C = 0.17 in general,

= 0.05 for web frame cut-outs with free edges in way of continuous longitudinal,

t_S = web thickness of the side transverses [mm],

R_{eH} = minimum nominal upper yield strength [N/mm^2] of the steel used for the webs of side transverses.

2.4.6 For scantlings of stringers supporting web frames see 1.5.3.1.

2.5 Strengthening in the Fore and Aft Body

In the fore and aft peak web frames and stringers or tiers of beams respectively are to be arranged according to 1.5.

D. Deck Structures

1. General

1.1 The requirements of this sub-section apply to supporting deck structures.

1.2 Permissible Stresses

Where the scantlings of girders not forming part of the longitudinal hull structure, or of transverses, deck beams, etc. are determined by means of strength calculations the following stresses are not to be exceeded:

Bending stress : $\sigma_b = \dfrac{150}{k}$ [N/mm^2]

Shear stress : $\tau = \dfrac{100}{k}$ [N/mm^2]

Equivalent stress : $\sigma_V = \sqrt{\sigma_b^2 + 3\tau^2} = \dfrac{180}{k}$ [N/mm^2]

1.3 Buckling Strength

The buckling strength of the deck structures is to be examined according to Section 3, C. For this purpose the design stresses according to Section 6, D.1. and the stresses due to local loads are to be considered.

2. Deck Beams and Girders

2.1 Transverse Deck Beams and Deck Longitudinals

2.1.1 Section modulus W_D and shear area A_D of transverse deck beams and of deck longitudinals between 0.25D and 0.75D above base line are to be determined by the following formula:

$$W_D = CsP\ell^2k \qquad [\text{cm}^3]$$

$$A_D = 0.05\left(1 - 0.817m_a\right)s\ell Pk \qquad [\text{cm}^2]$$

ℓ = Length of unsupported span [m]

m_a = $0.204\dfrac{s}{\ell}\left[4 - \left(\dfrac{s}{\ell}\right)^2\right]$ where $\dfrac{s}{\ell} \le 1$

C = 0.55

= 0.75 for beams, girders and transverses which are simply supported on one or both ends.

P = Deck load [kN/m^2] according to Section 5.

2.1.2 The section modulus of deck longitudinals of decks located below 0.25D and/or above 0.75D above base line is to be calculated according to C.2.

2.2 Attachment

2.2.1 Transverse deck beams are to be connected to the frames by brackets according to Section 3, B.4.2.

2.2.2 Deck beams crossing longitudinal walls and girders may be attached to the stiffeners of longitudinal walls and the webs of girders respectively by welding without brackets.

2.2.3 Deck beams may be attached to hatchway coamings and girders by double fillet welds where there is no constraint. The length of weld is not to be less than 0.6 x depth of the section.

2.2.4 Where deck beams are to be attached to hatchway coamings and girders of considerable rigidity (e.g. box girders), brackets are to be provided.

2.2.5 Within 0.6L amidships, the arm lengths of the beam brackets in single deck ships are to be increased by 20 %. The scantlings of the beam brackets need, however, not to be taken greater than required for the Rule section modulus of the frames.

2.2.6 Regarding the connection of deck longitudinals to transverses and bulkheads, C.2.1 is to be observed.

2.3 Girders and Transverses

2.3.1 The section modulus is not to be less than:

$$W = CeP\ell^2 k \qquad [cm^3]$$

Shear area is not to be less than:

$$A_W = 0.05e\ell Pk \qquad [cm^2]$$

e = Width of plating [m], measured from centre to centre of the adjacent unsupported fields

2.3.2 The depth of girders is not to be less than 1/25 of the unsupported span. The web depth of girders scalloped for continuous deck beams is to be at least 1.5 times the depth of the deck beams.

Scantlings of girders of tank decks are to be determined according to Section 12, B.4.

2.3.3 Where a girder does not have the same section modulus throughout all girder fields, the greater scantlings are to be maintained above the supports and are to be reduced gradually to the smaller scantlings.

2.3.4 End attachments of girders at bulkheads are to be so dimensioned that the bending moments and shear forces can be transferred. Bulkhead stiffeners under girders are to be sufficiently dimensioned to support the girders.

2.3.5 Face plates are to be stiffened by tripping brackets according to Section 3, B.7.2.5. At girders of symmetrical section, they are to be arranged alternately on both sides of the web.

2.3.6 For girders in line of the deckhouse sides under the strength deck, see Section 16, A.4.2.

2.3.7 For girders forming part of the longitudinal hull structure and for hatchway girders see 5.

2.4 Supporting Structure of Windlasses and Chain Stoppers

2.4.1 For the supporting structure under windlasses and chain stoppers, the following permissible stresses are to be observed:

bending stress : $\sigma_b = \dfrac{200}{k}$ [N/mm^2]

shear stress : $\tau = \dfrac{120}{k}$ [N/mm^2]

equivalent stress : $\sigma_V = \sqrt{\sigma_b^2 + 3\tau^2} = \dfrac{220}{k}$ [N/mm^2]

2.4.2 The acting forces are to be calculated for 80 % and 45 % respectively of the rated breaking load of the chain cable, i.e.:

for chain stoppers	80 %
for windlasses	80 %, where chain stoppers are not fitted.
	45 %, where chain stoppers are fitted.

3. Pillars

3.1 General

3.1.1 Structural members at heads and heels of pillars as well as substructures are to be constructed according to the forces they are subjected to. The connection is to be so dimensioned that at least 1 cm^2 cross sectional area is available for 10 kN of load.

Where pillars are affected by tension loads, doublings are not permitted.

3.1.2 Pillars in tanks are to be checked for tension. Tubular pillars are not permitted in tanks for flammable liquids.

3.1.3 For structural element of the pillars' transverse section, sufficient buckling strength according to Section 3, C has to be verified. The wall thickness of tubular pillars which may be expected to be damaged during loading and unloading operations is not to be less than:

$t_{WP} = 4.5 + 0.015 d_a$ [mm] for $d_a \leq 300$ mm.

$t_{WP} = 0.03 d_a$ [mm] for $d_a > 300$ mm.

d_a = outside diameter of pillar [cm]

3.1.4 Pillars also loaded by bending moments have to be specially considered.

3.1.5 Pillars have open cross section are to be specially considered.

3.2 Scantlings

The sectional area of pillars (A_{PS}) is not to be less than:

$$A_{PS\,min} = 10 \frac{F_L}{\eta_{buck} \cdot \sigma_{cr}} \quad [cm^2]$$

F_L = Pillar load [kN],

= PA + F_i

P = Deck load [kN/m^2] according to Section 5

A = Load Area (m^2) for one pillar

F_i = Load from pillars located above the pillar considered [kN],

η_{buck} = 0.65, buckling utilisation factor

σ_{cr} = Minimum critical buckling stress [N/mm^2]

$= \sigma_{EC}$ for $\sigma_{EC} \leq 0.5\mathrm{ReH}$

$= (1 - \frac{\mathrm{ReH}}{4\sigma_{EC}})$ for $\sigma_{EC} > 0.5\mathrm{ReH}$

σ_{EC} = Elastic column buckling stress [N/mm^2]

$$= \pi^2 E f_{end} \frac{I_{pillar}}{A_{PS} l_{pillar}^2} 10^{-4}$$

l_{pillar} = Unsupported length of the pillar [m]

I_{pillar} = Net moment of inertia about the weakest axis of the cross section of the pillar in [cm^4]

f_{end} = End constraint coefficient
= 4 where both ends are fixed
= 2 where one end is simply supported and the other end is fixed
= 1 where both ends are simply supported

A pillar end may be considered fixed when brackets of adequate size are fitted. Such brackets are to be supported by structural members with greater bending stiffness than the pillar.

4. Cantilevers

4.1 General

4.1.1 In order to withstand the bending moment arising from the deck load P, cantilevers for supporting girders, hatchway coamings, engine casings and unsupported parts of decks are to be connected to transverses, web frames, reinforced main frames, or walls.

4.1.2 When determining the scantlings of the cantilevers and the aforementioned structural elements, it is to be taken into consideration that the cantilever bending moment depends on the load capacity of the cantilever, the load capacity being dependent on the ratio of rigidity of the cantilever to that of the members supported by it.

4.1.3 Face plates are to be secured against tilting by tripping brackets fitted to the webs at suitable distances see also Section 3, B.7.2.

4.1.4 Particulars of calculation, together with drawings of the cantilever construction are to be submitted for approval. In case of simple arrangements submission of calculations may be dispensed with.

4.2 Permissible Stresses

4.2.1 When determining the cantilever scantlings, the following permissible stresses are to be observed:

- Where single cantilevers are fitted at greater distances:

bending stress : $\sigma_b = \frac{125}{k}$ [N/mm^2]

shear stress : [N/mm^2]

- Where several cantilevers are fitted at smaller distances (e.g. at every frame):

bending stress : $\sigma_b = \frac{150}{k}$ [N/mm^2]

shear stress : $\tau = \frac{100}{k}$ [N/mm^2]

equivalent stress : $\sigma_V = \sqrt{\sigma_b^2 + 3\tau^2} = \frac{180}{k}$ [N/mm^2]

- The stresses in web frames are not to exceed the values specified above.

4.3 Calculation of Bending Moments in Cantilevers

subjected to loads P_1 and P_2, in [kN], may be calculated

4.3.1 The distribution of bending moments of a cantilever construction extending over two decks, in a simplified manner according to the following formula see also Figure 8.7.

4.3.2 Load on Upper Cantilever Only

4.3.2.1 Cantilevers Adjacent to Hatchways

Bending moment M_1' in the upper cantilever (section 1 - 1):

$$M_1' = P_1(b_1 - e_1) \quad \text{[kNm]}$$

Bending moment M_{RO}' at upper end of upper web frame (section 2-2)

$$M_{RO}' = P_1 b_1 \left(1 - \frac{e_0}{h_0}\right) - M_B' \frac{e_0}{h_0} \quad \text{[kNm]}$$

Bending moment M_B' at lower end of upper web frame:

$$M_B' = P_1 b_1 \frac{2 - 3\left(\frac{e_0}{h_0}\right)^2}{4 + \frac{I_0 h_u}{I_u h_0}\left[3 - 6\frac{e_u}{h_u} + 4\left(\frac{e_u}{h_u}\right)^2\right]} \quad \text{[kNm]}$$

Moment of constraint M_C' at lower end of lower web frame:

$$M_C' = M_B' \frac{1 - \left(\frac{e_u}{h_u}\right)^2}{2} \quad \text{[kNm]}$$

Bending moment M_{RU}' at upper end of lower web frame (section 5-5):

$$M_{RU}' = M_B'\left(1 - \frac{3e_u}{2h_u}\right) \quad \text{[kNm]}$$

4.3.2.2 Cantilevers Clear of Hatchways

The bending moments determined in accordance with 4.3.2.1 are to be multiplied by the coefficient η_1 to be calculated according to the following formula:

$$\eta_1 = \frac{\frac{b_1}{2B_1} + \frac{I_1}{I_{b1}}\left(\frac{1}{2} - \frac{b_1}{B_1}\right)}{\frac{0.3 I_1 h_0}{I_0 b_1} + \frac{b_1}{B_1} + \frac{I_1}{I_{b1}}\left(\frac{1}{2} - \frac{b_1}{B_1}\right)}$$

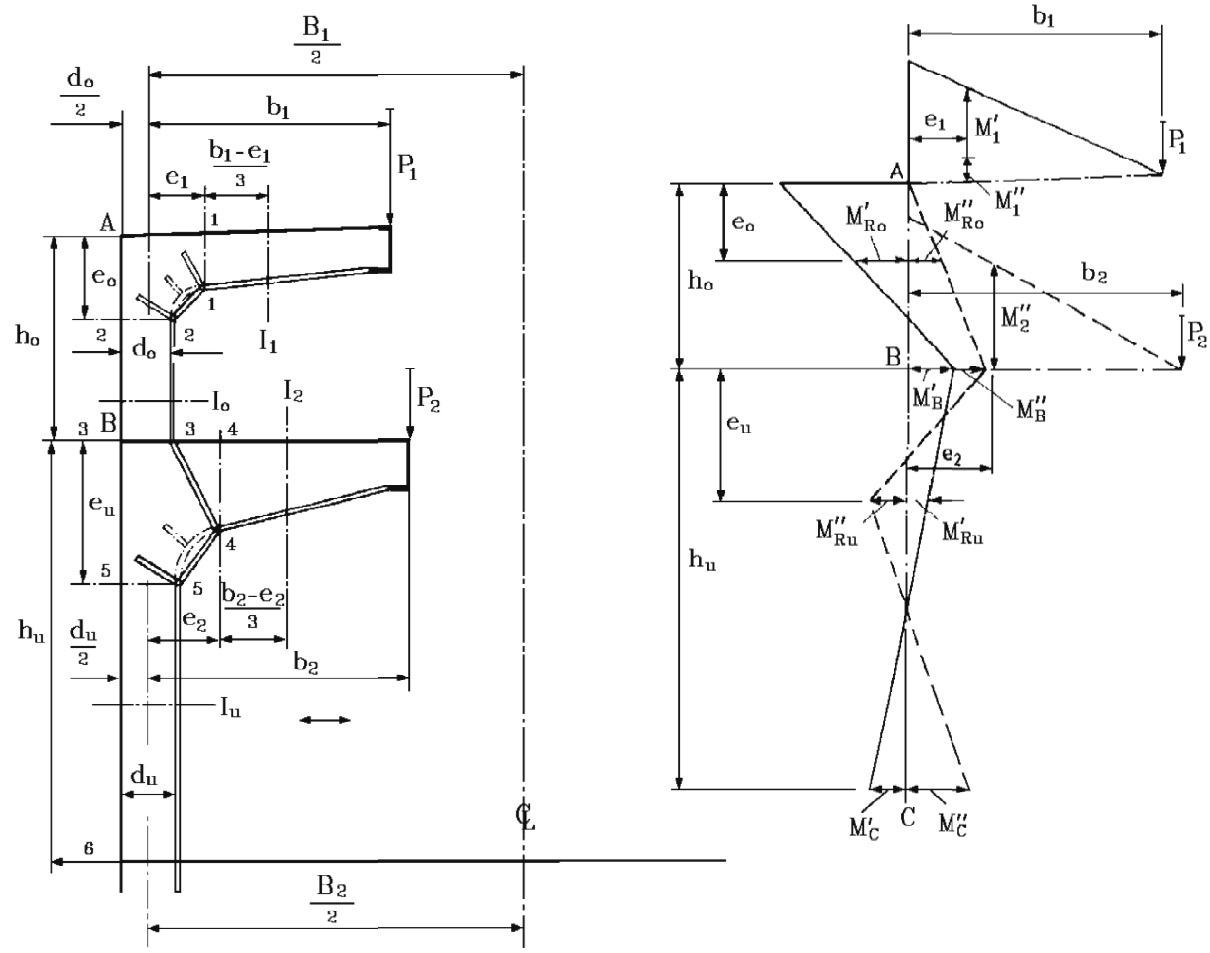

(a) **(b)**

Figure 8.7

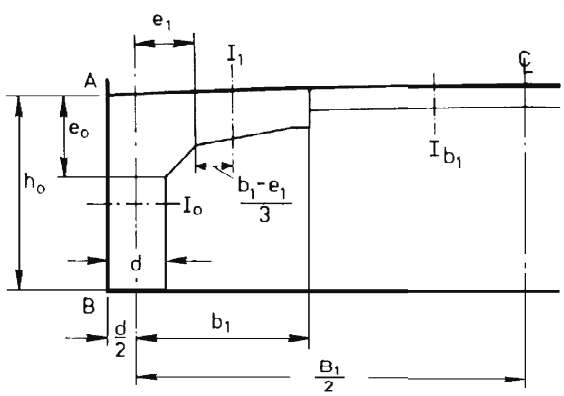

Figure 8.8

4.3.3 Load on Lower Cantilever Only

4.3.3.1 Cantilevers Adjacent to Hatchways

Bending moment M_2'' in the lower cantilever (section 4-4):

$$M_2'' = P_2\left(b_2 - e_2\right) \text{ [kNm]}$$

Bending moment M_B'' at lower end of upper web frame:

$$M_B'' = \alpha P_2 b_2 \qquad \text{[kNm]}$$

The coefficient α is to be taken from diagram 8.1 for given values of e_U / h_U and ε.

Bending moment M_{RO}'' at upper end of upper web frame (section 2 - 2):

$$M''_{RO} = M''_B \frac{e_0}{h_0} \quad \text{[kNm]}$$

Bending moment M_{RU}'' at upper end of lower web frame (section 5 - 5):

$$M''_{Ru} = \beta P_2 b_2 \quad \text{[kNm]}$$

The coefficient β is to be taken from diagram 8.3 for given values of e_U / h_U and ε.

Moment of constraint M_C'' at lower end of lower web frame:

$$M''_C = \varphi\, P_2 b_2 \quad \text{[kNm]}$$

The coefficient φ is to be taken from diagram 8.2 for given values of e_U / h_U and ε.

For cantilevers adjacent to hatchways, the ratio of rigidity ε is to be calculated according to the following formula:

$$\varepsilon = 0.9 \frac{I_0 h_U}{I_U h_0}$$

4.3.3.2 Cantilevers Clear of Hatchways

a) Where cantilevers are attached to rigid structural elements (e.g. hatchway end beams), the bending moment M_1'', which may be calculated according to the following formula is to be considered for the upper cantilever (section 1 - 1):

$$M''_1 = 0.2 \cdot \alpha \cdot P_2 \cdot b_2 \left(1 - \frac{e_1}{b_1}\right) \quad \text{[kNm]}$$

b) The coefficients α, β, and φ required for calculating the bending moments M_1'' according to a) as well as the bending moments M_B'', M_{RU}'' and M_C'' according to 4.3.3.1 are to be taken from diagrams 8.1 - 8.3 for the ratio of rigidity

$$\varepsilon = \frac{I_0 h_U}{I_U h_0}$$

c) The bending moments determined according to a) and b) as well as 4.3.3.1 are to be multiplied by the coefficient η_2 calculated according to the following formula:

$$\eta_2 = \frac{\dfrac{b_2}{2B_2} + \dfrac{I_2}{I_{b2}}\left(\dfrac{1}{2} - \dfrac{b_2}{B_2}\right)}{0.3\left(\dfrac{I_2 h_0}{I_0 b_2} + \dfrac{I_2 h_U}{I_U b_2}\right) + \dfrac{b_2}{B_2} + \dfrac{I_2}{I_{b2}}\left(\dfrac{1}{2} - \dfrac{b_2}{B_2}\right)}$$

4.3.4 Upper and Lower Cantilever Loaded Simultaneously

a) Upper cantilever (section 1 - 1):

Total bending moment M_1 :

$M_1 = M_1'$ [kNm]

for cantilevers adjacent to hatchways

$M_1 = M_1' + M_1''$ [kNm]

for cantilevers clear of hatchways

M_1' = See 4.3.2.1

M_1'' = See 4.3.3.2 a)

b) Upper End of Upper Web Frame (section 2 - 2):

At this location, the greater one of the two bending moments M_{RO}' or M_{RO}'' is decisive for dimensioning.

M_{RO}' = See 4.3.2.1

M_{RO}'' = See 4.3.3.1

c) Lower End of Upper Web Frame (section 3 - 3):

Total bending moment M_B :

$M_B = M_B' + M_B''$ [kNm]

M_B' = See 4.3.2.1

M_B'' = See 4.3.3.1

d) Lower Cantilever (section 4 - 4):

Total bending moment M_2 :

$M_2 = M_2''$ [kNm]

M_2'' = See 4.3.3.1

e) Upper End of Lower Web Frame (section 5 - 5):

At this location, the greater one of the two bending moments M_{RU}' or M_{RU}'' is decisive for dimensioning.

M_{RU}' = See 4.3.2.1

M_{RU}'' = See 4.3.3.1

f) Lower end of Lower Web Frame (section 6 - 6):

At this location, the greater one of the two bending

moments M_C' or M_C'' is decisive for dimensioning.

M_C' = See 4.3.2.1

M_C'' = See 4.3.3.1

5. Hatchway Girders and Girders Forming Part of the Longitudinal Hull Structure

5.1 The scantlings of longitudinal and transverse hatchway girders are to be determined on the basis of strength calculations. The calculations are to be based upon the deck loads calculated according to **Section 5**.

5.2 The hatchway girders are to be so dimensioned that the stress values given in Table 8.2 will not be exceeded.

5.3 For continuous longitudinal coamings the combined stress resulting from longitudinal hull girder bending and local bending of the longitudinal coaming is not to exceed the following value:

$$\sigma_L + \sigma_\ell \le \frac{200}{k} \qquad [N/mm^2]$$

σ_ℓ = Local bending stress in the ship's longitudinal direction,

σ_L = Design longitudinal hull girder bending stress according to Section 6, D.1.

Table 8.2 Maximum stress values σ_ℓ for hatchway girders

Longitudinal coaming and girders of the strength deck	All other hatchway girders
upper and lower flanges: σ_ℓ = 150/k [N/mm^2]	σ_ℓ = 150/k [N/mm^2]
deck level : σ_ℓ = 70/k [N/mm^2]	

5.4 The equivalent stress is not to exceed the following value:

$$\sigma_V = \left(0{,}8 + \frac{L}{450}\right)\frac{230}{k} \qquad [N/mm^2] \quad \text{for } L < 90 \text{ m.}$$

$$\sigma_V = \frac{230}{k} \qquad [N/mm^2] \quad \text{for } L \ge 90 \text{ m.}$$

$$\sigma_V = \sqrt{\sigma_X^2 - \sigma_X\sigma_Y + \sigma_Y^2 + 3\tau^2}$$

$$\sigma_X = \sigma_L + \sigma_\ell$$

σ_y = Stress in the ship's transverse direction,

τ = Shear stress,

τ_{max} = 90/k [N/mm^2].

The individual stresses σ_ℓ and σ_y are not to exceed 150/k [N/mm^2].

5.5 The requirements regarding buckling strength according to D.1.3 are to be observed.

5.6 Welding at the top of hatch coamings are subject to special approval.

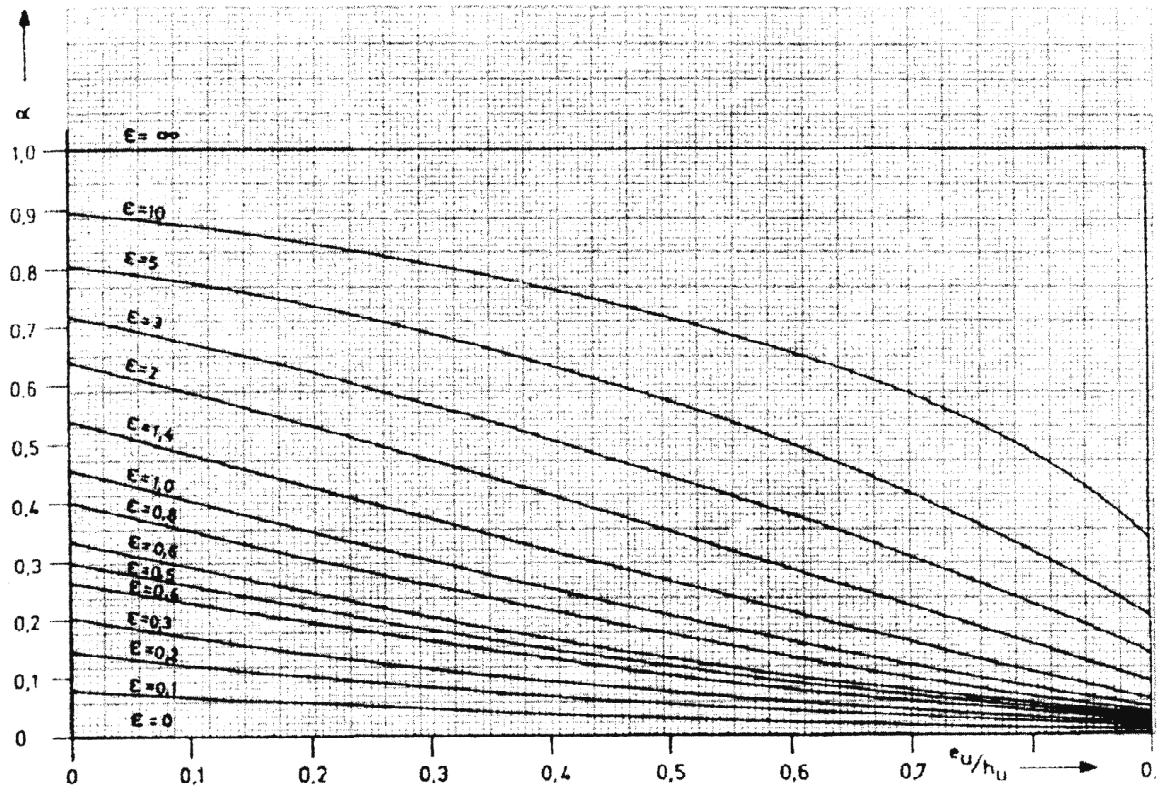

Diagram 8.1 coefficient α

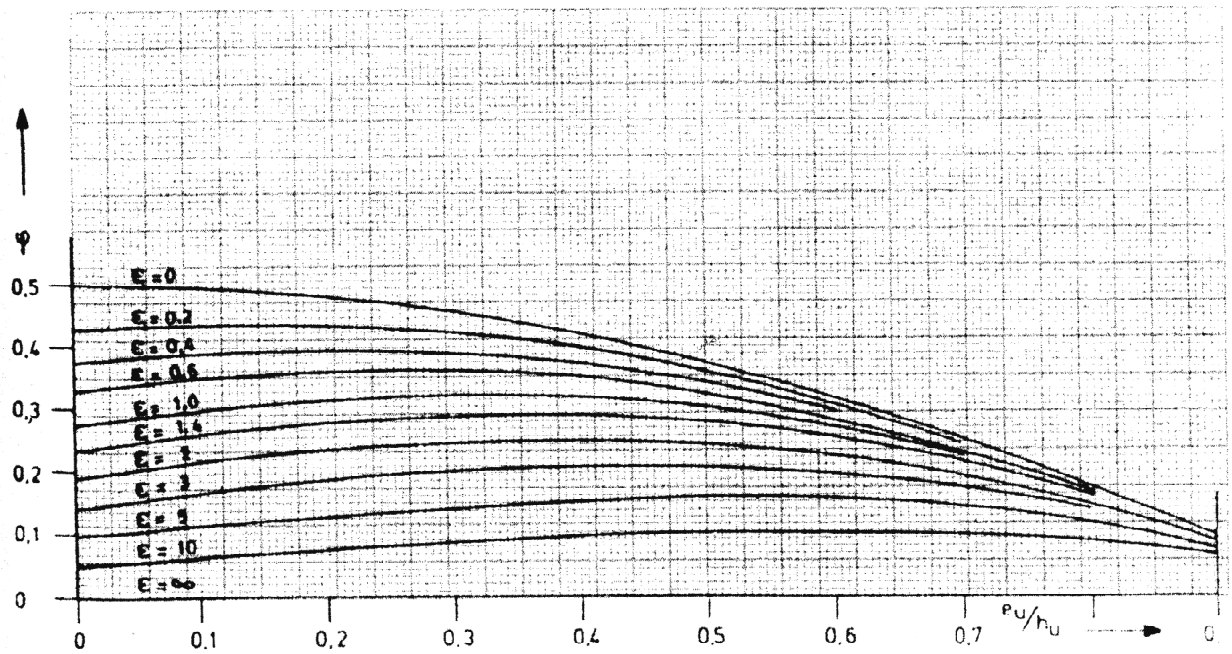

Diagram 8.2 coefficient φ

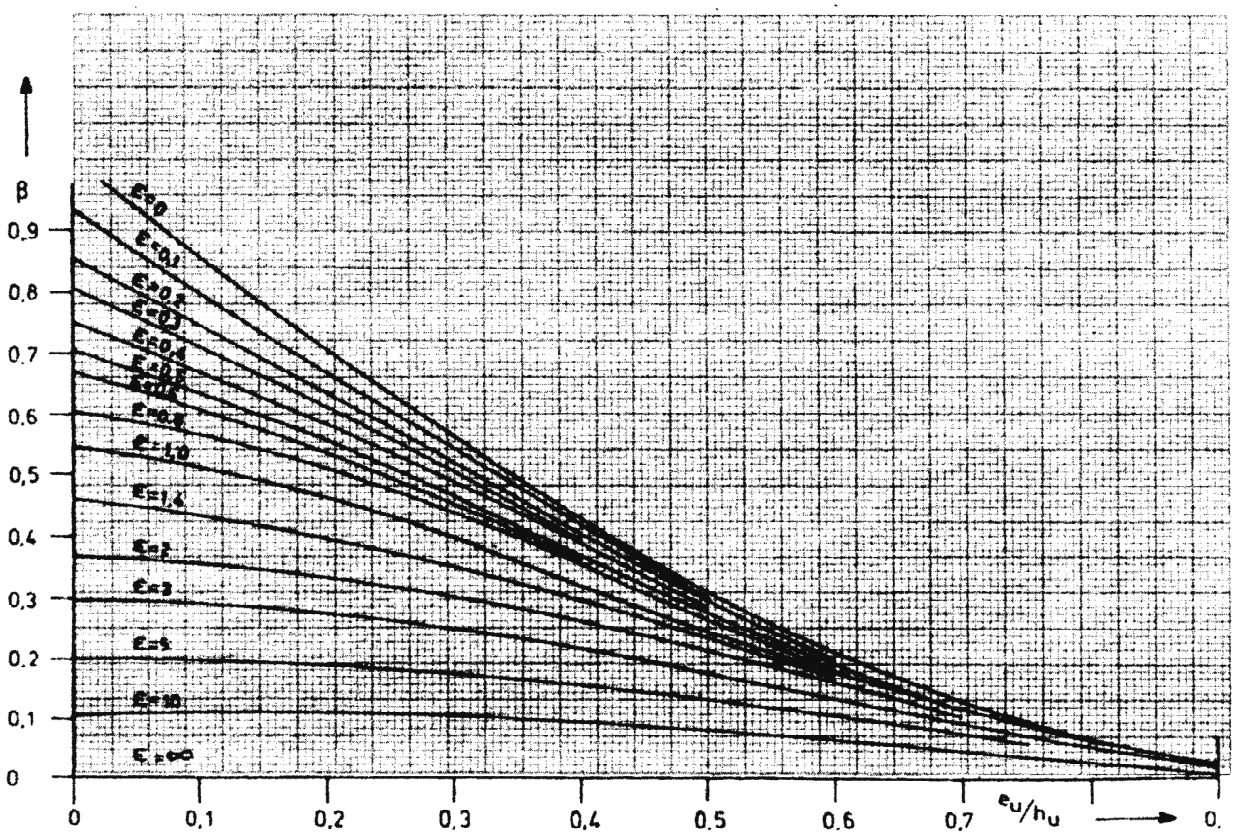

Diagram 8.3 coefficient β

SECTION 9

STEMS

Page

A. General

1. Application

The requirements specified in this Section apply to the construction, shape and scantlings of stems.

2. General Requirements

2.1 Adequate continuity of strength is to be ensured at the connection of stems to the surrounding structure. Sudden changes in sections are to be avoided.

2.2 Thickness of the plates in way of connection with the hull structure shall be reduced to the thickness of members to which the stem will be welded.

2.3 Steel castings of stems shall be of simple shape with adequately long radii of casting.

2.4 The welded structure (steel casting) of the stem shall be strengthened by transverse brackets (cast webs).

B. Structural Arrangement

1.1 Stem steel plates shall be strengthened by transversal brackets fitted not greater than 1 m apart below the summer load waterline and not greater than 1.5 m apart above the summer load waterline. Longitudinal strengthening for the connection with the bottom centre girder in the stem structure shall be provided.

1.2 Where the distance between brackets, required in 1.1, is reduced by 0.5 m, the thickness of stem plates may be reduced by 20% in relation to requirements given below. The plate thickness, however, shall not be less than that of the adjoining shell plating. The brackets shall extend beyond the joints of the stem with the shell plating. They shall be welded to the nearest frames and their thickness shall be equal to that of the shell plating.

1.3 Where a radius of curvature of the stem exceeds 200 mm at the level of the summer load waterline, a centerline web with face plates shall be fitted from the keel to the level of 0.15T above the summer load waterline. The thickness of the web and the face plate shall not be less than that of the transverse brackets.

1.4 Where a radius of curvature of the bow is large, the stem design is subject to TL acceptance in each particular case.

C. Stem

1. Bar Stem

1.1 The cross sectional area of a bar stem below the load waterline is not to be less than:

$$A_b = 1.41 \cdot \mathbf{L} - 17 \quad [cm^2].$$

1.2 Above the load waterline, the cross sectional area of a bar stem A_b may be gradually reduced to $0.75A_b$.

2. Plate Stem

2.1 The thickness of plate stems at the design load waterline is not to be less than:

$$t = 6 + 0.08\ L\ [mm]$$

$$t_{max} = 25\sqrt{k} \quad [mm]$$

The plate thickness must not be less than the required thickness according to Section 7, C.5.

The extension ℓ of the stem plate from its trailing edge aftwards must not be smaller than:

$$\ell = 70 \cdot \sqrt{\mathbf{L}}\ [mm]$$

Dimensioning of the stiffening has to be done according to Section 8, C.

2.2 Above and below the design load waterline the thickness may taper to the thickness of the shell at the ends at the freeboard deck and to the thickness of the flat keel plate at the forefoot, respectively. In addition, starting from 600 mm above the design load waterline, the thickness may gradually reduced to (0,75·t).

2.3 For strengthening for navigation in ice see Section 14, D.7.1

3. Bulbous Bow

3.1 Where a bulbous bow is fitted, the structural arrangements are to be such that the bulb is adequately supported and integrated into the forepeak structure.

3.2 The bulb structure shall be strengthened by the stiffened horizontal platforms at spacing not exceeding 2 meters.

3.3 Where length of the bulb, measured from the forward perpendicular, exceeds 0.03 L, the non-tight bulkhead shall be fitted in the centreline. Where the bulb length is less than that given above, a deep frame may be used instead of a bulkhead.

3.4 In way of a wide bulb, additional strengthening in the form of a centreline wash bulkhead is to be fitted.

3.5 Irrespective of compliance with the requirements specified in Section 7 for the thickness of the bottom and side plating, thickness of the bulb plating shall not be less than that determined in accordance with the formula given in 2.1.

3.6 The form of the fore part of the hull shall provide for free anchorage at a bulb at a heel of 5° to the opposite side. Additional strengthening shall be fitted in way of the possible anchor blows.

SECTION 10

STERN FRAME

Page

A. Definitions

R_{eH} = Minimum nominal upper yield point in [N/mm^2] according to Section 3, A.2.

k = Material factor according to Section 3, A.2.2, for cast steel see Section 18, A.4.2

C_R = Rudder force in [N] according to Section 18, B.1.

For determining preliminary scantlings the flexibility of the rudder horn may be ignored and the supporting force B_1 may be determined by the following formula:

$$B_1 = C_R \cdot \frac{b}{c}$$

(In general)

$$B_1 = C_R \cdot 0.5$$

(For rudders with two supports)

B_1 = Support force in [N] according to Section 18, C.3.

t_K = Corrosion allowance in [mm] according to Section 3, B.9.

x = Distance of the respective cross section from the rudder axis in [m]

$x_{min} = 0{,}5 \cdot \ell_{50}$

$x_{max} = \ell_{50}$

ℓ_{50} = Length in [m]. Refer to Figure 10.4 and Section 18, C.3.2.

B. Stern Frame

1. General

1.1 Due regard is to be paid to the design of the aft body, rudder and propeller well in order to minimize the forces excited by the propeller.

1.2 The following value is recommended for the propeller clearance $d_{0,9}$ related to 0.9 **R** (see Figure 10.1):

$$d_{0.9} \geq 0{,}004 \cdot n \cdot d_p^3 \sqrt{\frac{V\left[1 - \sin(0.75 \cdot \gamma)\right](0.5 + \frac{z_B}{x_F})}{D}} \text{ [m]}$$

R = Propeller radius, [m]

V = Ship's speed, see Section 1, O. [kn]

n = Number of propeller revolutions per minute

D = Maximum displacement of ship in [t]

d_p = Propeller diameter in [m]

γ = Skew angle of the propeller in [°], see Figure 10.2

z_B = Height of wheelhouse deck above weather deck in [m]

x_F = Distance of deckhouse front bulkhead from aft edge of stern in [m], see Figure 10.1

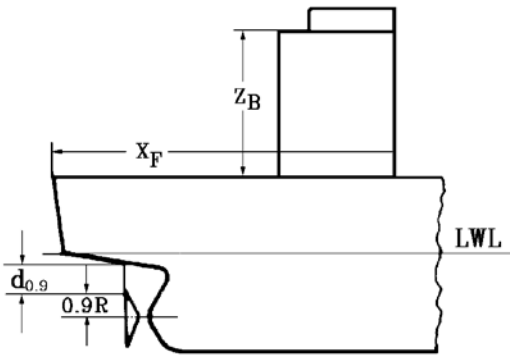

Figure 10.1 Propeller clearance $d_{0,9}$

1.3 For single screw ships, the lower part of the stern frame is to be extended forward by at least 3 times the frame spacing from fore edge of the boss, for all other ships by 2 times the frame spacing from after edge of the stern frame (rudder post).

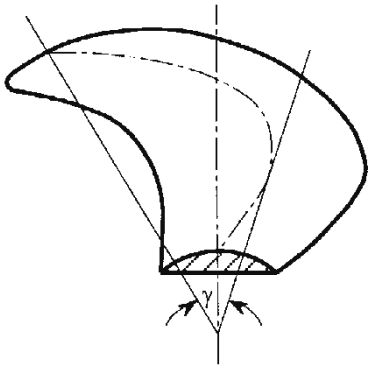

Figure 10.2 Skew angle

1.4 The stern tube is to be surrounded by the floor plates or, when the ship's shape is too narrow to be stiffened by internal rings. Where no sole piece is fitted, the internal rings may be dispensed with.

1.5 The plate thickness of sterns of welded construction for twin screw vessels shall not be less than:

$$t = (0.07\,L + 5.0)\sqrt{k} \quad [mm]$$

$$t_{max} = 22.0\,\sqrt{k} \quad [mm]$$

2. Propeller Post

2.1 The scantlings of rectangular, solid propeller posts are to be determined according to the following formula:

$$\ell = 1.4\,\mathbf{L} + 90 \quad [mm]$$

$$b = 1.6\,\mathbf{L} + 15 \quad [mm]$$

Where other sections than rectangular ones are used, their section modulus is not to be less than that resulting from ℓ and b.

2.2 The scantlings of propeller posts of welded construction are to be determined according to the following formula:

$$\ell = 50\sqrt{L} \quad [mm]$$

$$b = 36\sqrt{L} \quad [mm]$$

$$t = 2.4\sqrt{L \cdot k} \quad [mm]$$

Note:

With single-screw ships having in the propeller region above the propeller flaring frames of more than α = 75° the thickness of the shell should not be less than the thickness of the propeller stem. For α ≤ 75° the thickness may be 0.8 t. In no case the thickness must be less than the thickness of the side shell according to Section 7.

This recommendation applies for that part of the shell which is bounded by an assumed sphere the centre of which is located at the top of a propeller blade in the twelve o'clock position and the radius of which is 0.75 · propeller diameter.

Sufficient stiffening should be arranged, e.g. by floors at each frame and by longitudinal girders.

2.3 Where the cross sectional configuration is deviating from Figure 10.3 and for cast steel propeller posts the section modulus of the cross section related to the longitudinal axis is not to be less than:

$$W_x = 1.2 \cdot \mathbf{L}^{1.5} \cdot k \quad [cm^3].$$

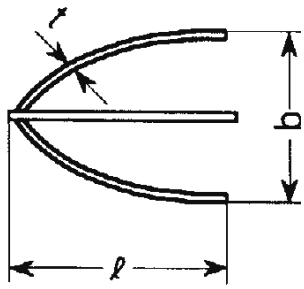

Figure 10.3 Propeller post

2.4 The wall thickness of the boss in the propeller post in its finished condition is to be at least 60 per cent of the breadth b of the propeller post according to 2.1.

2.5 The wall thickness of the boss in propeller posts of welded construction according to 2.2 must not be less than 0.9 the wall thickness of the boss according to C.2.

The outer diameter of the stern frame boss, however, must not be less than the outer diameter of the propeller boss at its forward edge.

3. Sole Piece

3.1 The section modulus of the sole piece related to the z-axis is not to be less than:

$$W_z = \frac{B_1 \cdot x \cdot k}{80} \quad [cm^3]$$

3.2 The section modulus W_z may be reduced by 15 per cent where a rudder post is fitted.

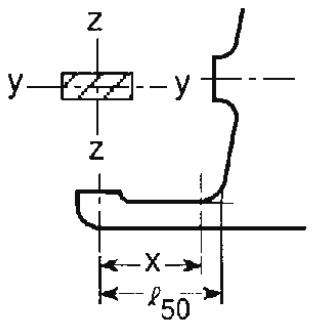

Figure 10.4 Length ℓ_{50} of a sole piece

3.3 The section modulus related to the y-axis is not to be less than:

- Where no rudder post or rudder axle is fitted:

$$W_y = \frac{W_z}{2}$$

- Where a rudder post or rudder axle is fitted:

$$W_y = \frac{W_z}{3}$$

3.4 The sectional area at the location x = l_{50} is not to be less than:

$$A_s = \frac{B_1}{48} k \quad [mm^2]$$

3.5 The equivalent stress taking into account bending and shear stresses at any location within the length ℓ_{50} is not to exceed:

$$\sigma_e = \sqrt{\sigma_b{}^2 + 3 \cdot \tau^2} = \frac{115}{k} \quad [N/mm^2]$$

σ_b, τ = Stress components [N/mm^2] of the equivalent stress, defined as:

$$\sigma_b = \frac{M_b}{W_z(x)} \quad [N/mm^2]$$

$$\tau = \frac{B_1}{A_s} \quad [N/mm^2]$$

M_b = Bending moment at the section considered [Nm];

M_b = $B_1 \cdot x$ [Nm]

M_{bmax} = $B_1 \cdot \ell_{50}$ [Nm]

W_z = Section moduli according to 3.2

A_s = Sectional area of the sole piece according to 3.4

4. Rudder Horn of Semi Spade Rudders

4.1 When the connection between the rudder horn and the hull structure is designed as a curved transition into the hull plating, special consideration is to be given to the effectiveness of the rudder horn plate in bending and to the stresses in the transverse web plates.

4.2 The bending moments and shear forces are to be determined by a direct calculation or in line with the guidelines given in 5 and 6 for semi spade rudder with one elastic support and semi spade rudder with 2-conjugate elastic support respectively.

4.3 The section modulus of the rudder horn in transverse direction related to the horizontal x-axis is at any location z not to be less than:

$$W_x = \frac{M_b \cdot k}{67} \quad [cm^3]$$

M_b = Bending at a rudders horn of semi spade rudders according to 5 or 6

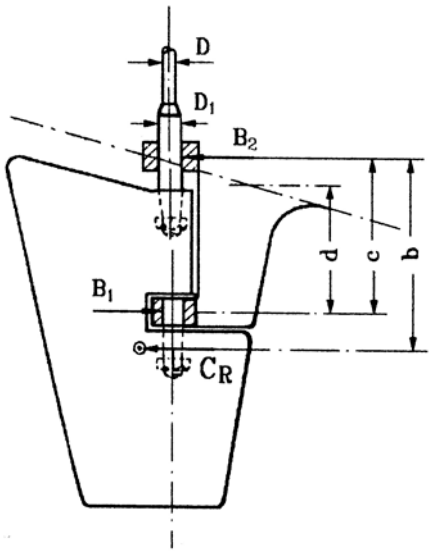

Figure 10.5 Arrangement of bearings of a semi spade rudder

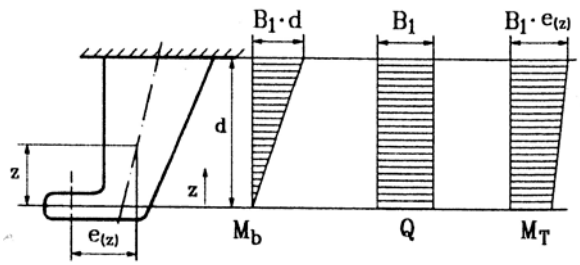

Figure 10.6 Loads on the rudder horn

4.4 At no cross section of the rudder horn the shear stress due to the shear force Q is to exceed the value:

$$\tau = \frac{48}{k} \quad [N/mm^2]$$

The shear stress is to be determined by the following formula:

$$\tau = \frac{B_1}{A_h} \quad [N/mm^2]$$

A_h = Effective shear area of the rudder horn in y-direction in [mm^2].

4.5 The equivalent stress at any location (z) of the rudder horn is not to exceed:

$$\sigma_v = \sqrt{\sigma_b^2 + 3(\tau^2 + \tau_T^2)} = 120/k \quad [N/mm^2]$$

$$\sigma_b = \frac{M_b}{W_x} \quad [N/mm^2]$$

$$\tau_T = \frac{M_T \cdot 10^3}{2 \cdot A_T \cdot t_h} \quad [N/mm^2]$$

A_T = Sectional area in [mm^2] surrounded by the rudder horn at the location examined

t_h = Thickness of the rudder horn plating.

4.6 When determining the thickness of the rudder horn plating the provisions of 5.2 - 5.4 are to be complied with. The thickness is, however, not to be less than:

$$t_{min} = 2.4\sqrt{L \cdot k} \quad [mm]$$

4.7 The rudder horn plating is to be effectively connected to the aft ship structure, e.g. by connecting the plating to side shell and transverse/ longitudinal girders, in order to achieve a proper transmission of forces, see Figure 10.7.

Brackets or stringer are to be fitted internally in horn, in line with outside shell plate, as shown in Figure 10.7.

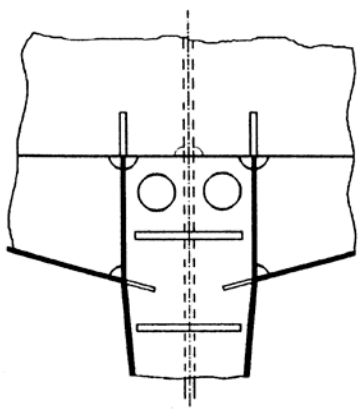

Figure 10.7 Rudder horn integration into the aft ship structure

4.8 Transverse webs of the rudder horn are to be led into the hull up to the next deck in a sufficient number and must be of adequate thickness.

4.9 Strengthened plate floors are to be fitted in line with the transverse webs in order to achieve a sufficient connection with the hull. The thickness of these plate floors is to be increased by 50 per cent above the Rule values as required by Section 8, B.2.3.

4.10 The center line bulkhead (wash-plate) in the after peak is to be connected to the rudder horn.

4.11 Scallops are to be avoided in way of the connection between transverse webs and shell plating.

4.12 The weld at the connection between the rudder horn plating and the side shell is to be full penetration. The welding radius is to be as large as practicable and may be obtained by grinding.

4.13 Where the transition between rudder horn and shell is curved, about 50 % of the required total section modulus of the rudder horn is to be formed by the webs in a Section A - A located in the center of the transition zone, i.e. 0.7 · r above the beginning of the transition zone. See Figure 10.8.

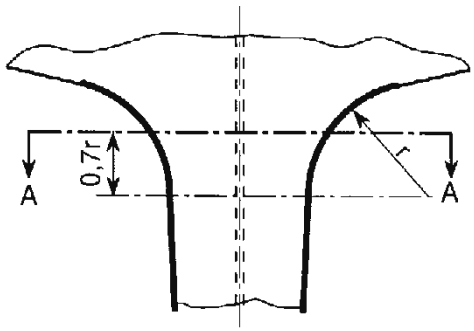

Figure 10.8 Transition between rudder horn and shell

5. Rudder Horn of Semi Spade Rudders With One Elastic Support

The loads on the rudder horn are as follows:

$M_b = B_1 \cdot z$ [Nm],

$M_{bmax} = B_1 \cdot d$ [Nm]

$q = B_1$ [N]

$M_T(z) = B_1 \cdot e(z)$ [Nm]

M_b = Bending moment

q = Shear force

M_T = Torsional moment

B_1 = Support force (refer to A.1)

Estimation for B_1 is given below:

$$B_1 = \frac{C_R \cdot b}{\ell_{20} + \ell_{30}}$$

6. Rudder Horn of Semi Spade Rudders With Two Conjugate Elastic Supports

6.1 Rudder horn bending moment

The bending moment acting on the generic section of the rudder horn is to be obtained, in Nm, from the following formulae:

- Between the lower and upper supports provided by the rudder horn:

$$M_H = F_{A1} \cdot z$$

- Above the rudder horn upper-support:

$$M_H = F_{A1} \cdot z + F_{A2} \cdot (z - d_{lu})$$

where:

F_{A1} = Support force at the rudder horn lower-support, in N, to be obtained according to Section 18 Figure 18.7, and taken equal to B_1.

F_{A2} = Support force at the rudder horn upper-support, in N, to be obtained according to Section 18 Figure 18.7, and taken equal to B_2.

z = Distance, in m, defined in Figure 10.9, to be taken less than the distance d, in m, defined in the same Figure.

d_{lu} = Distance, in m, between the rudder-horn lower and upper bearings (according to Section 18 Figure 18.7, $d_{lu} = d - \lambda$).

6.2 Rudder horn shear force

The shear force Q_H acting on the generic section of the rudder horn is to be obtained, in N, from the following formulae:

- Between the lower and upper rudder horn bearings:

$$Q_H = F_{A1}$$

- Above the rudder horn upper-bearing:

$$Q_H = F_{A1} + F_{A2}$$

where:

F_{A1}, F_{A2} = Support forces, in N.

The torque acting on the generic section of the rudder horn is to be obtained, in Nm, from the following formulae:

- Between the lower and upper rudder horn bearings:

$$M_T = F_{A1} \cdot e(z)$$

- Above the rudder horn upper-bearing:

$$M_T = F_{A1} \cdot e(z) + F_{A2} \cdot e(z)$$

where:

F_{A1}, F_{A2} = Support forces, in N

e(z) = Torsion lever, in m, defined in Figure 10.9.

6.3 Rudder horn shear stress calculation

For a generic section of the rudder horn, located between its lower and upper bearings, the following stresses are to be calculated:

τ_S = Shear stress, in N/mm^2, to be obtained from the following formula:

$$\tau_s = \frac{F_{A1}}{A_H}$$

τ_T = Torsional stress, in N/mm^2, to be obtained for hollow rudder horn from the following formula:

$$\tau_T = \frac{1000 \cdot M_T}{2 \cdot F_T \cdot t_H}$$

For solid rudder horn, τ_T is to be considered by **TL** on a case by case basis.

For a generic section of the rudder horn, located in the region above its upper bearing, the following stresses are to be calculated:

τ_S = Shear stress, in N/mm^2, to be obtained from the following formula:

$$\tau_s = \frac{F_{A1} + F_{A2}}{A_H}$$

τ_T = Torsional stress, in N/mm2, to be obtained for hollow rudder horn from the following formula:

$$\tau_T = \frac{1000 \cdot M_T}{2 \cdot F_T \cdot t_H}$$

For solid rudder horn, τ_T is to be considered by TL on a case by case basis where:

F_{A1}, F_{A2} = Support forces, in N;

A_H = Effective shear sectional area of the rudder horn, in mm^2, in y-direction;

M_T = Torque, in Nm;

F_T = Mean of areas enclosed by outer and inner boundaries of the thin walled section of rudder horn, in m^2;

t_H = Plate thickness of rudder horn, in mm. For a given cross section of the rudder horn, the maximum value of τ_T is obtained at the minimum value of t_H.

6.4 Rudder horn bending stress calculation

For the generic section of the rudder horn within the length d, the following stresses are to be calculated:

σ_B = Bending stress, in N/mm^2, to be obtained from the following formula:

$$\sigma_B = \frac{M_H}{W_x}$$

where:

M_H = Bending moment at the section considered, in Nm.

W_X = Section modulus, in cm^3, around the X-axis (see Figure 10.9).

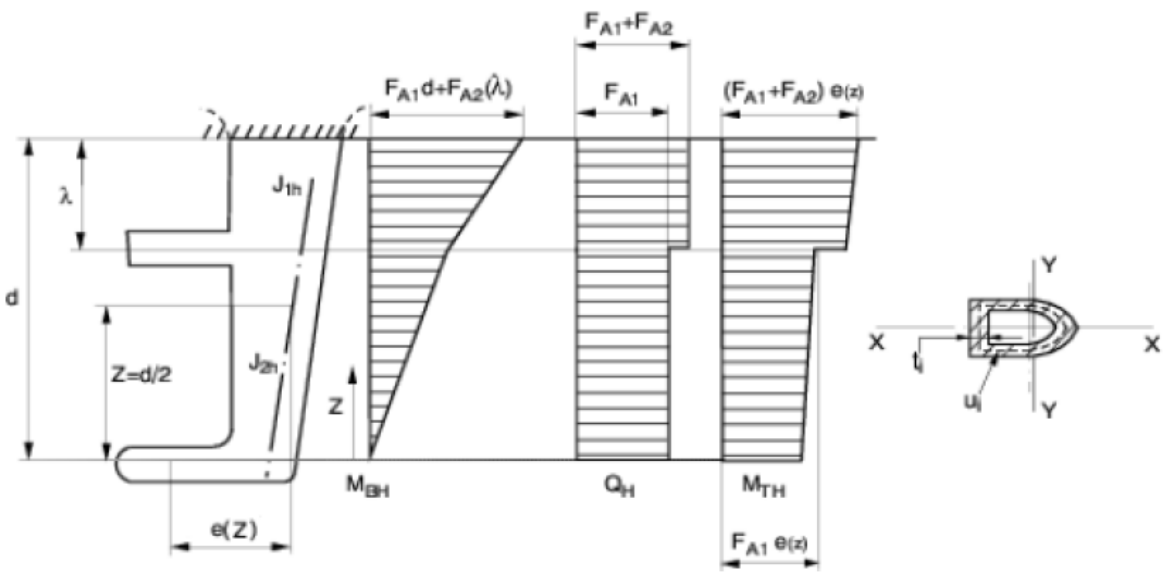

Figure 10.9 Loads on the rudder horn (rudder with two elastic supports)

C. Propeller Brackets

1. The strut axes should intersect in the axis of the propeller shaft as far as practicable. The struts are to be extended through the shell plating and are to be attached in an efficient manner to the frames and plate floors respectively. The construction in way of the shell is to be carried out with special care. In case of welded connection, the struts are to have a weld flange or a thickened part or are to be connected with the shell plating in another suitable manner. For strengthening of the shell in way of struts and shaft bossings, see Section 7, C. The requirements of Section 20, B.4.3 are to be observed.

2. The scantlings of solid struts are to be determined as outlined below depending on shaft diameter d:

thickness	0.44 d
cross-sectional area in propeller bracket	0.44 d^2
wall thickness of boss	0.25 d.

3. Propeller brackets of welded construction and shaft bossings are to have the same strength as solid ones according to 2.

4. For propeller brackets consisting of one strut only a strength analysis according to D.1.2 and a vibration analysis according to D.2. are to be carried out. Due consideration is to be given to fatigue strength aspects.

D. Elastic Stern Tube

1. Strength Analysis

When determining the scantlings of the projecting stern tube in way of the connection with the hull, the following stresses are to be proved:

1.1 Static load

Bending stresses caused by static weight loads are not to exceed 0.35 R_{eH}.

1.2 Dynamic load

The pulsating load due to loss of one propeller blade is to be determined assuming that the propeller revolutions are equal to 0.75 times the rated speed. The following permissible stresses are to be observed:

σ_{dperm}= 0.40 R_{eH} for R_{eH} = 235 N/mm^2

σ_{dperm} = 0.35 R_{eH} for R_{eH} = 355 N/mm^2

The aforementioned permissible stresses are approximate values. Deviations may be permitted in special cases taking into account fatigue strength aspects.

2. Vibration Analysis

The bending natural frequency at rated speed of the system comprising stern tube, propeller shaft and propeller is not to be less than 1.5 times the rated propeller revolutions. However, it is not to exceed 0.66 times the exciting frequency of the propeller (number of propeller blades x rated propeller revolutions) and is not to coincide with service conditions, including the damage condition (loss of one propeller blade).

SECTION 11

WATERTIGHT BULKHEADS

A. Introduction

1. General

1.1 The requirements given in this section apply to arrangement, strength and scantling of the watertight bulkheads.

2. Definitions

A_i = Effective partial area [mm^2] considering Section 3, B,

A_S = Area of webs [mm^2],

A_W = Web sectional area [cm^2],

b = Breadth of face plate [cm],

d = Distance between face plates [cm],

e = Width of element [cm],

e_{pi} = Distance [mm] of the centre of area of the partial area A_i from the neutral axis of the yielded section,

h_b = Distance [m] from the load centre of the structure to a point 1 m. above the bulkhead deck, for the collision bulkhead to a point 1 m. above the collision bulkhead,

h_W = Height of web [mm],

k = Material factor according to Section 3, A,

M_P = Plastic moment [kNm],

P = Pressure load on bulkhead [kN/m^2],

Q = Shear force [kN],

Q_P = Plastic shear force [kN],

R_{eH} = Minimum nominal upper yield point [N/mm^2] according to Section 3, A,

s_S = Spacing of stiffeners [m],

s = Breadth of web plate [cm],

t_K = Corrosion allowance according to Section 3, B, 9.

t_W = Web thickness [mm],

t_{Wa} = Web thickness, as built [mm],

W = Section modulus [cm^3],

W_P = Plastic section modulus [cm^3],

α = Flare angle of frame section in propeller plane measured between a vertical line and the tangent to the bottom shell plating,

ℓ = Unsupported span [m],

ℓ_S = Stiffener spacing [m],

σ_N = Normal stress [N/mm^2],

σ_V = Equivalent stress [N/mm^2],

τ = Shear stress [N/mm^2],

$\Delta\ell$ = Distance from the mid of hold before to the mid of hold aft of the considered transverse bulkhead or supporting bulkhead [m],

3. Watertight Subdivision

3.1 The following transverse, watertight bulkheads shall be fitted in all ships:

- A collision bulkhead,
- An after peak bulkhead,
- A bulkhead at each end of the engine room.

In ships with machinery aft, the stern tube bulkhead may substitute the aft engine room bulkhead.

3.2 Number and location of transverse bulkheads fitted in addition to those specified in 3.1 are to be so

selected as to ensure sufficient transverse strength of the hull.

3.3 For ships which require proof of survival capability in damaged conditions, the watertight subdivision will be determined by damage stability calculations. For oil tankers see Section 28, for passenger vessels see Section 30, for special purpose ships see Section 31, for cargo ships of more than 100 m. in length see Section 26 and for supply vessels see Section 32.

4. Arrangement of Watertight Bulkheads

4.1 Collision Bulkhead

4.1.1 A collision bulkhead shall be located at a distance from the forward perpendicular, not less than $0.05L_C$ or 10 m, whichever is less, and, except as may be permitted by TL, not more than $0.08L_C$ or $0.05L_C$+3 m, whichever is greater, see Figure 11.1.

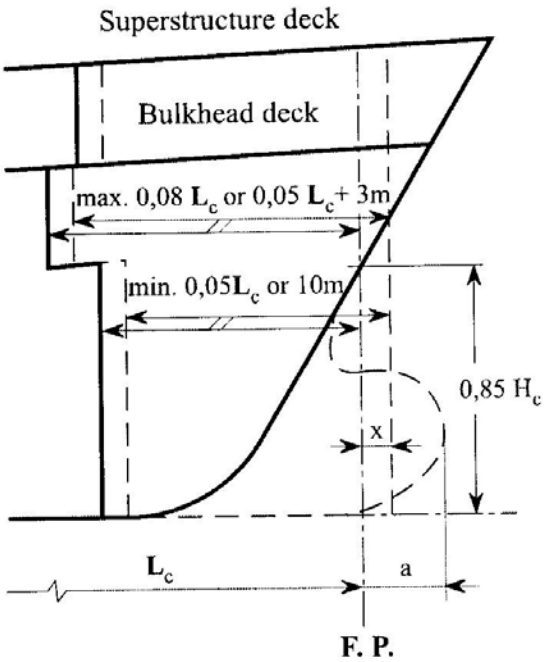

Figure 11.1 Location of collision bulkhead

4.1.2 Where any part of the ship below the waterline extends forward of the forward perpendicular, e.g., a bulbous bow, the required distances specified in 4.1.1 are to be measured from a reference point located at a distance x forward of the F.P. which shall be the minimum of:

- 0.5 a
- $0.015L_C$
- 3 m

The length L_C and the distance a are to be specified in the approval documents.

4.1.3 The collision bulkhead shall extend watertight up to the bulkhead deck. The bulkhead may have steps or recesses provided they are within the limits prescribed in 4.1.1.

4.1.4 No doors, manholes, access openings, or ventilation ducts are permitted in the collision bulkhead below the bulkhead deck.

4.1.5 Except as provided in 4.1.6 the collision bulkhead may be pierced below the bulkhead deck by not more than one pipe for dealing with fluid in the forepeak tank, provided that the pipe is fitted with a screw down valve capable of being operated from above the bulkhead deck, the valve chest being secured inside the forepeak to the collision bulkhead. TL may, however, authorize the fitting of this valve on the after side of the collision bulkhead provided that the valve is readily accessible under all service conditions and the space in which it is located is not a cargo space. All valves shall be of steel, bronze or other approved ductile material. Valves of ordinary cast iron or similar material are not acceptable.

4.1.6 If the forepeak is divided to hold two different kinds of liquids TL may allow the collision bulkhead to be pierced below the bulkhead deck by two pipes, each of which is fitted as required by 4.1.5, provided TL is satisfied that there is no practical alternative to the fitting of such a second pipe and that, having regard to the additional subdivision provided in the forepeak, the safety of the ship is maintained.

4.1.7 Where a long forward superstructure is fitted the collision bulkhead shall be extended weather tight to the deck next above the bulkhead deck. The extension need not be fitted directly above the bulkhead below provided it is located within the limits prescribed in 4.1.1

or 4.1.2 with the exception permitted by 4.1.8 and that the part of the deck which forms the step is made effectively weather tight. The extension shall be so arranged as to preclude the possibility of the bow door causing damage to it in the case of damage to, or detachment of, a bow door.

4.1.8 Where bow doors are fitted and a sloping loading ramp forms part of the extension of the collision bulkhead above the bulkhead deck, the ramp shall be weather tight over its complete length. In cargo ships the part of the ramp which is more than 2.3 m. above the bulkhead deck may extend forward of the limits specified in 4.1.1 or 4.1.2. Ramps not meeting the above requirements shall be disregarded as an extension of the collision bulkhead.

4.1.9 The number of openings in the extension of the collision bulkhead above the bulkhead deck shall be restricted to the minimum compatible with the design and normal operation of the ship. All such openings shall be capable of being closed weather tight.

4.2 Stern Tube and Remaining Watertight Bulkheads

4.2.1 Bulkheads shall be fitted separating the machinery space from cargo and accommodation spaces forward and aft and made watertight up to the bulkhead deck. In passenger ships an after peak bulkhead shall also be fitted and made watertight up to the bulkhead deck. The after peak bulkhead may, however, be stepped below the bulkhead deck, provided the degree of safety of the ship as regards subdivision is not thereby diminished.

4.2.2 In all cases stern tubes shall be enclosed in watertight spaces of moderate volume. In passenger ships the stern gland shall be situated in a watertight shaft tunnel or other watertight space separate from the stern tube compartment and of such volume that, if flooded by leakage through the stern gland, the bulkhead deck will not be immersed. In cargo ships other measures to minimize the danger of water penetrating into the ship in case of damage to stern tube arrangements may be taken at the discretion of **TL**.

In cargo ships a stern tube enclosed in a watertight space of moderate volume, such as an aft peak tank, where the inboard end of the stern tube extends through the aft peak/engine room watertight bulkhead into the engine room is considered to be an acceptable solution satisfying the requirement of Chapter II-1, Regulation 12.10 of SOLAS 1974, as amended, provided the inboard end of the stern tube is effectively sealed at the aft peak/engine room bulkhead by means of an approved watertight/oiltight gland system.

5. Openings in Watertight Bulkheads

5.1 General

5.1.1 Type and arrangement of doors are to be submitted for approval.

5.1.2 Regarding openings in the collision bulkhead see 4.1.4 - 4.1.7.

5.1.3 In the other watertight bulkheads, watertight doors may be fitted.

5.1.4 On ships for which proof of floatability in damaged condition is to be provided, hinged doors are permitted above the most unfavourable damage waterline for the respective compartment only. Deviating and additional requirements hereto for cargo ships are given in SOLAS, Chapter II-1, Reg. 13-1 (as amended by MSC.216 (82).

5.1.5 For bulkhead doors in passenger ships, see Section 30, G.

5.1.6 For internal doors in watertight bulkheads in cargo ships and passenger ships, see UI SC156 Table 1.

5.1.7 Watertight doors are to be sufficiently strong and of an approved design. The thickness of plating is not to be less than the minimum thickness according to B.

5.1.8 Openings for watertight doors in the bulkheads are to be effectively framed such as to facilitate proper fitting of the doors and to guarantee perfect water tightness.

5.1.9 Before being fitted, the watertight bulkhead doors, together with their frames, are to be tested by a head of water corresponding to the bulkhead deck height. After having been fitted, the doors are to be hose- or soap- tested for tightness and to be subjected to an operational test. Deviating and additional requirements hereto are given in SOLAS, Chapter II-1 Reg. 16 as amended.

5.2 Hinged Doors

Hinged doors are to be provided with rubber sealings and toggles or other approved closing appliances which guarantee a sufficient sealing pressure. The toggles and closing appliances are to be operable from both sides of the bulkhead. Hinges are to have oblong holes. Bolts and bearings are to be of corrosion resistant material. A warning notice requiring the doors to be kept closed at sea is to be fitted at the doors.

5.3 Sliding Doors

Sliding doors are to be carefully fitted and are to be properly guided in all positions. The closing mechanism is to be safely operable from each side of the bulkhead and from above the freeboard deck. If closing of the door cannot be observed with certainty, an indicator is to be fitted which shows, if the door is closed or open; the indicator is to be installed at the position from which the closing mechanism is operated.

5.4 Penetrations through Watertight Bulkheads

Where bulkhead fittings are penetrating watertight bulkheads, care is to be taken to maintain water tightness by observation of SOLAS, Chapter II-1, Reg.12, as amended. For penetrations through collision bulkheads, 4.1.4 – 4.1.7 is to be observed.

Heat sensitive materials are not to be used in systems which penetrate watertight subdivision bulkheads, where deterioration of such systems in the event of fire would impair the watertight integrity of the bulkheads.

B. Scantlings

1. Bulkhead Plating

1.1 Where holds are intended to be filled with ballast water, their bulkheads are to comply with the requirements of Section 12.

1.2 Bulkheads of holds intended to be used for carrying dry cargo in bulk with a density $\rho c > 1{,}0$ are to comply with the requirements of Section 27, as far as their strength is concerned.

1.3 The thickness of the bulkhead plating is not to be less than:

$$t = c_P s_S \sqrt{P} + t_K \quad \text{[mm]}$$

$$P = 9.81 h_b \quad \text{[kN/m}^2\text{]}$$

$$t_{min} = 6.0\sqrt{f} \quad \text{[mm]}$$

t_K = Corrosion allowance according to Section 3, B,

s_S = Spacing of stiffeners [m],

P = Pressure load on bulkhead [kN/m^2],

h_b = Distance from the load centre of the structure to a point 1 m. above the bulkhead deck, for the collision bulkhead to a point 1 m. above the collision bulkhead. For dry cargo ships with proven damage stability see Section 26. For the definition of "load centre" see Section 5, A.2.1,

c_P = $1.1\sqrt{f}$ for collision bulkhead

= $0.9\sqrt{f}$ for other bulkheads

f = $\dfrac{235}{R_{eH}}$

R_{eH} = Minimum nominal upper yield point [N/mm^2] according to Section 3, A.

For ships with large deck openings according to Section 6, F, the plate thickness of transverse bulkheads is not to be less than:

$$t = C\sqrt[3]{\frac{\Delta\ell}{F_1 R_{eH}\left(\frac{1}{s_S^2}+\frac{1}{\ell_S^2}\right)}\sqrt{\frac{D}{2}\left(\frac{D}{2}-T\right)+T^2}} + t_K \quad \text{[mm]}$$

C = 13, in general,

= 15, below z = 0.2D and above 0.8D and generally in the fore body before x/L=0.8,

$\Delta\ell$ = Distance from the mid of hold before to the mid of hold aft of the considered transverse bulkhead or supporting bulkhead [m],

s_S, ℓ_S = Spacing of stiffeners [m],

F_1 = Correction factor for boundary condition at the longitudinal stiffeners See Table 11.1.

Table 11.1 Correction Factor

1,0 for stiffeners sniped at both ends
Guidance values where both ends are effectively connected to adjacent structures * : 1,05 for flat bars 1,10 for bulb sections 1,20 for angle and tee-sections 1,30 for girders of high rigidity (e.g. bottom transverses)
* Exact values may be determined by direct calculations.

1.4 In small ships, the thickness of the bulkhead plating need not exceed the thickness of the shell plating for a frame spacing corresponding to the stiffener spacing.

1.5 The stern tube bulkhead is to be provided with a strengthened plate in way of the stern tube.

1.6 In areas where concentrated loads due to ship manoeuvres at terminals may be expected, the buckling strength of bulkhead plate fields directly attached to the side shell, is to be examined according to Section 8, C.2.3.4 and 2.3.5.

1.7 When determining the bulkhead scantlings of tanks, connected by cross-flooding arrangements, the increase in pressure head at the immersed side that may occur at maximum heeling in the damaged condition shall be taken into account.

2. Stiffeners

2.1 The section modulus of bulkhead stiffeners is not to be less than:

$$W = c_S s_S \ell^2 P \qquad [cm^3]$$

ℓ = Unsupported span [m], according to Section 3, B,

c_S = Coefficient according to Table 11.2

Table 11.2 Coefficient c_S

c_S	Collision bulkhead	Other bulkheads
Constraint of both ends	0.33 · f	0.265 · f
Simple support of one end and constraint at the other end	0.45 · f	0.36 · f
Both ends simply supported	0.66 · f	0.53 · f
For the definition of "constraint" and "simply supported", see Section 3, B.		

2.2 In horizontal part of bulkheads, the stiffeners are also to comply with the rules for deck beams according to Section 8, D.

2.3 The scantlings of the brackets are to be determined in dependence of the section modulus of the stiffeners according to Section 3, B.4. If the length of the stiffener is 3.5 m. and over, the brackets are to extend to the next beam or the next floor.

2.4 Unbracketed bulkhead stiffeners are to be connected to the decks by welding. The length of weld is to be at least 0.6 x depth of the section.

2.5 If the length of stiffeners between bulkhead deck and the deck below is 3 m. and less, no end attachment according to 2.4 is required. In this case the stiffeners are to be extended to about 25 mm from the deck and sniped at the ends. See also Section 3, B.3.

2.6 Bulkhead stiffeners cut in way of watertight doors are to be supported by carlings or stiffeners.

3. Corrugated Bulkheads

3.1 The plate thickness of corrugated bulkheads

is not to be less than required according to 1.3. For the spacing s, the greater one of the values b or s in [m] according to 3.3 is to be taken.

3.2 The section modulus of a corrugated bulkhead element is to be determined according to 2.1. For the spacing s, the width of an element e, in [m] according to 3.3 is to be taken. For the end attachment see Section 3, B.4.

3.3 The actual section modulus of a corrugated bulkhead element is to be assessed according to the following formula:

$$W = td\left(b + \frac{s}{3}\right) \qquad [cm^3]$$

e = Width of element [cm],

b = Breadth of face plate [cm],

s = Breadth of web plate [cm],

d = Distance between face plates [cm],

t = Plate thickness [cm],

α ≥ 45°

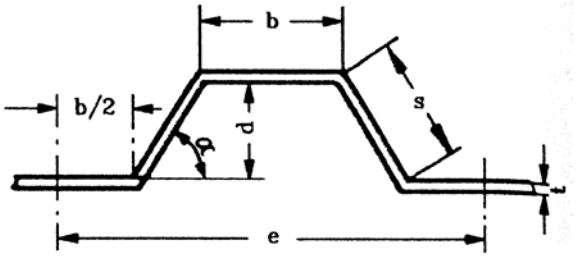

Figure 11.2 Element of a corrugated bulkhead

4. Primary Supporting Members

4.1 General

Primary supporting members are to be dimensioned using direct calculation as to ensure the stress criteria according to 4.3.1 for normal operation and the criteria according to 4.3.2 if any cargo hold is flooded.

Regarding effective width and buckling proof in each case Section 3, C shall be observed.

In areas with cut-outs 2nd order bending moments shall be taken into account.

4.2 Load Assumptions

4.2.1 Loads During Operation

Loads during operation are the external water pressure, see Section 5, and the loads due to cargo and filled tanks, see Section 16, Section 17, and if relevant depending on the deck opening Section 6, F.

4.2.2 Loads in Damaged Condition

The loads in case of hold flooding shall be determined considering Section 26.

4.3 Strength Criteria

4.3.1 Load Case "Operation"

With loads according to 4.2.1 the following permissible stresses are to be used:

$$\sigma_V = \sqrt{\sigma_N^2 + 3\tau^2} \le \frac{180}{k} \qquad [N/mm^2]$$

σ_N = Normal stress ≤ 150/k [N/mm²],

τ = Shear stress ≤ 100/k [N/mm²],

If necessary Section 6, F must be observed in addition.

4.3.2 Load Case "Hold Flooding"

The thickness of webs shall not be smaller than:

$$t_W = \frac{1000Q}{\tau_{perm} h_W} + t_K \qquad [mm]$$

$$\tau_{perm} = 727\sqrt{\frac{Q}{\ell_S h_W}\sqrt{R_{eH}\left(1 + 0.75\frac{\ell_S^2}{s_S^2}\right)}} \le \frac{R_{eH}}{2.08} \qquad [N/mm^2]$$

Q = Shear force [kN],

h_W = Height of web [mm],

s_S, ℓ_S = Lengths of stiffeners of the unstiffened web field, where $h_W \geq \ell_S \leq s_S$

4.3.3 Dimensioning of Primary Supporting Members

For dimensioning primary supporting members plastic hinges can be taken into account. This can be done either by a non-linear calculation of the total bulkhead or by a linear girder grillage calculation of the idealized bulkhead.

When a linear girder grillage calculation is done only those moments and shear forces are taken as boundary conditions at the supports, which can be absorbed by the relevant sections at these locations in full plastic condition.

The plastic moments are calculated by:

$$M_P = \frac{W_P \, R_{eH}}{1200 \, C} \quad \text{[kNm]}$$

C = 1.1 for the collision bulkhead,

= 1.0 for cargo hold bulkheads.

The plastic shear forces are:

$$Q_P = \frac{A_S \, R_{eH}}{2080 \, C} \quad \text{[kN]}$$

A_S = Area of webs [m^2],

For the field moments and shear forces resulting by that the sections are defined in such a way that the condition

$\sigma_V \leq R_{eH}$ is fulfilled.

The plastic section moduli are to be calculated as follows:

$$W_P = 0.001 \sum_{i=1}^{n} A_i e_{pi} \quad [cm^3]$$

e_{pi} = Distance [mm] of the centre of area of the partial area A_i from the neutral axis of the yielded section. The neutral axis shall not be taken in a position lower than the lowest point of the web.

A_i = Effective partial area [mm^2] considering Section 3, B.5.

In this connection the area A_S of webs transferring shear must not be taken into account.

That part of the web height related to shear transfer must not be less than:

$$\Delta h_W = h_W \frac{t_W}{t_{Wa}}$$

t_{Wa} = As built thickness of the web $\geq t_W$

Where girders are built up by partial areas A_i with different yield stress R_{eHi} the plastic moments are calculated by:

$$M_P = \frac{\sum_{i=1}^{n} A_i \, R_{eHi} \, e_{Pi}}{1.2 \times 10^6 \, C} \quad \text{[kNm]}$$

The plastic shear forces are:

$$Q_P = \frac{\sum_{i=1}^{n} A_{Si} \, R_{eHi}}{2080 \, C} \quad \text{[kN]}$$

5. Watertight Bulkheads and Tank Bulkheads for Ships Engaged in Sheltered Water Service (Assigned with the Notations K6, L1 and L2)

5.1 The scantlings of watertight bulkheads are to be determined according to Section 11.

The plate thickness need not be greater than the midship thickness of the side shell plating at the corresponding frame spacing.

However, the plate thickness is not to be less than 3.5 mm for the lowest plate strake and 3.0 mm for the remaining plate strakes

5.2 The scantlings of tank bulkheads and tank walls are to be determined according to Section 12.

However, the thickness of plating and stiffener webs is not to be less than 5 mm.

C. Shaft Tunnels

1. General

1.1 Shaft and stuffing box are to be accessible. Where one or more compartments are situated between stern tube bulkhead and engine room, a watertight shaft tunnel is to be arranged. The size of the shaft tunnel is to be adequate for service and maintenance purposes.

1.2 The access opening between engine room and shaft tunnel is to be closed by a watertight sliding door complying with the requirements according to A.5.3. For extremely short shaft tunnels watertight doors between tunnel and engine room may be dispensed with subject to special approval.

1.3 Tunnel ventilators and the emergency exit are to be constructed watertight up to the freeboard deck.

2. Scantlings

2.1 The plating of the shaft tunnel is to be dimensioned as for a bulkhead according to B.1.

2.2 The plating of the round part of tunnel tops may be 10 per cent less in thickness.

2.3 In the range of hatches, the plating of the tunnel top is to be strengthened by not less than 2 mm unless protected by a ceiling.

On container ships this strengthening can be dispensed with.

2.4 The section modulus of shaft tunnel stiffeners is to be determined according to B.2.

2.5 Horizontal parts of the tunnel are to be treated as horizontal parts of bulkheads and as cargo decks respectively.

2.6 Shaft tunnels in tanks are to comply with the requirements of Section 12.

2.7 The tunnel is to be suitably strengthened under pillars.

SECTION 12

TANK STRUCTURES

A. General

1. Introduction

1.1 The requirements given in this section apply to strength and scantling of the tank structures.

1.2 Where a tank bulkhead forms part of a watertight bulkhead, its strength is not to be less than required by Section 11.

1.3 For tanks in the double bottom, see Section 8, B.3.6.

1.4 For cargo oil tanks see Section 28.

1.5 For dry cargo holds which are also intended to be used as ballast water tanks, see C.2.

1.6 For testing of tanks, see H.

1.7 Where tanks are provided with cross flooding arrangements the increase of the pressure head is to be taken into consideration see also Section 30 and Section 26.

2. Definitions

A_W = Cross sectional area [cm^2],

B = Breadth of ship [m], as defined in Section 1, H.2,

b = Breadth of face plate strip [cm],

b_{St} = Breadth of stringer or depth of vertical girder including end bracket (if any) [m] at the supporting points,

b_t = Tank breadth in [m],

d_p = Propeller diameter [m],

e_t = Characteristic tank dimension ℓ_t or b_t [m],

f_{blade} = Propeller blade passage excitation frequency at n [Hz],

f_{ign} = Main engine ignition frequency at n_e,

f_{plate} = Lowest natural frequency of isotropic plate field under consideration of additional outfitting and hydrodynamic masses [Hz],

f_{stiff} = Lowest natural frequency of stiffener under consideration of additional outfitting and hydrodynamic masses [Hz],

h = Head measured from the load centre of plate panel or stiffener respectively to the top of overflow,

k = Material factor according to Section 3, A,

k_{stroke} = Number indicating the type of main engine,

L = Length of ship [m], as defined in Section 1, H.2,

n = Maximum propeller shaft revolution rate [1/min],

n_c = Number of cylinders of main engine,

n_e = Maximum main engine revolution rate [1/min],

P = Pressure load on bulkhead [kN/m^2],

P_{St} = Supporting force of stringer or vertical girder [kN],

P_{DT} = Dynamic tank pressure [kN/m^2] according to Section 5, D,

P_{ST} = Static tank pressure [kN/m^2] according to Section 5, C,

P_T = Design tank pressure [kN/m^2] according to Section 5, C.3 and Section 5, D.8.

= $P_{ST} + P_{DT}$

= P_{T1}, P_{T2}, P_{T3}, P_{T4}, P_{T5}

For tank structures of tanks adjacent to the shell the pressure P_T below T_{min} need not be larger than:

= $P_{ST} - \rho.g.(T_{min} - z) + P_{DT} + P_w \leq (P_{ST} + P_{DT})$

P_W = P_{WS} or P_{WB} as applicable [kN/m^2].

P_{WS} = Wave load on side shell [kN/m^2] according to Section 5, D.2.

P_{WB} = Wave load on bottom [kN/m^2] according to Section 5, D.3.

T_{min} = Smallest design ballast draught [m]

x_r = Distance of plate field or stiffener to 12 o'clock propeller blade tip position [m],

R_{eH} = Minimum nominal upper yield point [N/mm^2] according to Section 3, A,

R_{eP} = Minimum nominal upper yield point of the cladding at service temperature [N/mm^2],

s = Spacing of stiffeners or load width [m],

t = Plate thickness [mm],

t_K = Corrosion allowance according to Section 3, B,

t_{min} = Minimum plate thickness [mm],

t_P = Thickness of the cladding [mm],

T_C = Carriage temperature of liquid cargo [°C],

T_P = Pitch period [s], as defined in Section 5, B.2,

T_R = Roll period [s], as defined in Section 5, B.3,

$T_{\ell,b}$ = Natural period of liquid in tank [s],

W = Section modulus [cm^3],

Z = Number of propeller blades,

α = Flare angle of frame section in propeller plane measured between a vertical line and the tangent to the bottom shell plating,

ℓ = Unsupported span [m], as defined in Section 3,B,

ℓ_t = Tank length in [m],

σ_b = Bending stress [N/mm^2],

σ_D = Compressive stress [N/mm^2],

σ_L = Membrane stress at the position considered in [N/mm^2] according to Section 6, D.1,

σ_V = Equivalent stress [N/mm^2],

τ = Shear stress [N/mm^2],

τ_L = Shear stress due to longitudinal hull girder bending in [N/mm^2] , as defined in Section 6, D.1.

τ_{St} = Shear stress introduced by the stringer into the longitudinal bulkhead or side shell [N/mm^2],

3. Subdivision of Tanks

3.1 In tanks extending over the full breadth of the ship intended to be used for partial filling, (e.g. oil fuel and fresh water tanks), at least one longitudinal bulkhead is to be fitted, which may be a wash bulkhead.

3.2 Where the forepeak is intended to be used as tank, at least one complete or partial longitudinal wash bulkhead is to be fitted, if the tank breadth exceeds 0.5B or 6 m., whichever is the greater.

When the after peak is intended to be used as tank, at least one complete or partial longitudinal wash bulkhead is to be fitted. The largest breadth of the liquid surface should not exceed 0.3B in the aft peak.

3.3 Peak tanks exceeding 0.06L or 6 m. In length, whichever is greater, shall be provided with a transverse wash bulkhead.

4. Air, Overflow and Sounding Pipes

Each tank is to be fitted with air pipes, overflow pipes and sounding pipes. The air pipes are to be led to above the exposed deck.

The arrangement is to be such as to allow complete filling of the tanks. The height from upper surface of deck to their openings is to be at least 760 mm. on the freeboard deck and 450 mm. on a superstructure deck. See also Section 16, D.

The sounding pipes are to be led to the bottom of the tanks (see also Chapter 4, Machinery Section 11).

5. Forepeak Tank

Oil is not to be carried in a forepeak tank. See also SOLAS 74, Chapter II-2, Reg. 15.6 and MARPOL 73/78 Annex I, Reg. 14.4.

6. Separation of Oil Fuel Tanks From Tanks for Other Liquids

6.1 The arrangement and subdivision of fuel oil tanks has to be in compliance with MARPOL, Annex I, Reg. 12 A "Oil Fuel Tank Protection" and see Unified Interpretations MPC 94.

6.2 Oil fuel tanks are to be separated from tanks for lubricating oil, hydraulic oil, thermal oil, vegetable oil, feed water, condensate water and potable water by cofferdams.

6.3 Upon special approval on small ships the arrangement of cofferdams between oil fuel and lubricating oil tanks may be dispensed with provided that:

6.3.1 The common boundary is continuous, i.e. it does not abut at the adjacent tank boundaries, see Figure 12.1.

Where the common boundary cannot be constructed continuously according to Figure 12.1, the fillet welds on both sides of the common boundary are to be welded in two layers and the throat thickness is not to be less than 0.5t (t = plate thickness);

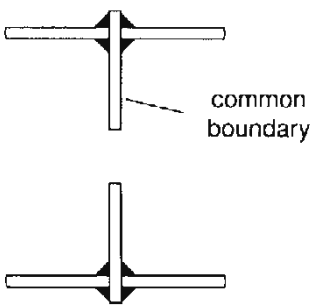

Figure 12.1 Continuous common boundary replacing a cofferdam

6.3.2 Stiffeners or pipes do not penetrate the common boundary;

6.3.3 The corrosion allowance t_K for the common boundary is not less than 2.5 mm.

6.4 Oil fuel tanks adjacent to lubricating oil circulation tanks are not permitted.

6.5 For fuel oil tanks which are heated up to a temperature which is higher than the flash point -10°C of the relevant fuel Chapter 4, Machinery Installations, Section 10, B.5 is to be observed specifically

7. Tanks for Heated Liquids

7.1 Where heated liquids are intended to be car ried in tanks, a calculation of thermal stresses is required, if the carriage temperature of the liquid exceeds the following values:

T_C = 65 °C in case of longitudinal framing,

T_C = 80 °C in case of transverse framing.

7.2 The calculations are to be carried out for both temperatures, the actual carriage temperature and the limit temperature T_C according to 7.1.

The calculations are to give the resultant stresses in the hull structure based on a sea water temperature of 0 °C and an air temperature of 5 °C.

Constructional measures and/or strengthening will be required on the basis of the results of the calculation for both temperatures.

B. Scantlings

1. Plating

1.1 The plate thickness is not to be less than:

$$t = 1.1s\sqrt{P_T k} + t_K \qquad \text{[mm]}$$

P_T = Design tank pressure load [kN/m^2] according to A.2.

k = Material factor according to Section 3, A,

s = Spacing of stiffeners or load width in [m],

t_K = Corrosion allowance according to Section 3, B.

1.2 The thickness of tank boundaries (including deck and inner bottom) carrying also normal and shear stresses due to longitudinal hull girder bending is not to be less than:

$$t = 16.8 n_f s \sqrt{\frac{P_T}{\sigma_{p\ell}}} + t_K \qquad [mm]$$

n_f = 1.0 for transverse stiffening

= 0.83 for longitudinal stiffening

$$\sigma_{p\ell} = \sqrt{\left(\frac{235}{k}\right)^2 - 3\tau_L^2} - 0.89\,\sigma_L \qquad [N/mm^2]$$

σ_L = Membrane stress at the position considered in [N/mm^2] according to Section 6, D.1.

τ_L = Shear stress due to longitudinal hull girder bending in [N/mm^2] at the position considered see also Section 6, D.1.

1.3 Proof of buckling strength of longitudinal bulkhead plating exposed to compressive stresses due to longitudinal hull girder bending is to be carried out according to Section 3, C.

For longitudinal bulkheads the design stresses according to Section 6, D.1 and the stresses due to the local loads are to be considered.

2. Minimum Thickness

2.1 The thickness of all structures in tanks is not to be less than the following minimum value:

$$t_{min} = 5.5 + 0.02L \qquad [mm]$$

2.2 For fuel oil, lubrication oil and freshwater tanks t_{min} need not to be taken greater than 7.5 mm.

2.3 For ballast tanks of dry cargo ships t_{min} need not be taken greater than 9.0 mm.

2.4 For oil tankers see Section 28.

3. Thickness of Clad Plating

3.1 Where the yield point of the cladding is not less than that of the base material the plate thickness is to be determined according to B.1.

3.2 Where the yield point of the cladding is less than that of the base material the plate thickness is not to be less than:

$$t = 0.55 s \sqrt{(P_T)\frac{k}{A}} + t_K \qquad [mm]$$

$$A = 0.25 - \frac{t_P}{2t}\left[1 - r - \frac{t_P}{2t}\left(1 - r^2\right)\right] \quad \text{for one side clad steel}$$

$$A = 0.25 - \frac{t_P}{t}\left[1 - \frac{t_P}{t}\right](1 - r) \quad \text{for both side clad steel}$$

t = Plate thickness including cladding [mm]

t_P = Thickness of the cladding [mm],

$$r = \frac{R_{eP}}{R_{eH}}$$

R_{eP} = Minimum nominal upper yield point of the cladding at service temperature [N/mm^2],

R_{eH} = Minimum nominal upper yield point of the base material according to Section 3, A [N/mm^2].

3.3 The plate thicknesses determined in accordance with 3.1 and 3.2 respectively may be reduced by 0.5 mm.

4. Stiffeners and Girders

4.1 Stiffeners and Girders, which are not Considered as Longitudinal Strength Members

4.1.1 The section modulus of stiffeners and girders constrained at their ends is not to be less than:

$$W = 0.55 s \ell^2 P_T k \qquad [cm^3]$$

P_T = Design tank pressure load [kN/m^2] according to A.2.

Where one or both ends are simply supported, the section moduli are to be increased by 50 per cent.

The cross sectional area of the girder webs is not to be less than:

$$A_W = 0.05 s \ell P_T k \qquad [cm^2]$$

The buckling strength of the webs is to be checked according to Section 3, C.

4.1.2 Where the scantlings of stiffeners and girders, are determined according to strength calculations, the following permissible stress values apply:

$$\sigma_b = \frac{150}{k} \qquad [N/mm^2]$$

$$\tau = \frac{100}{k} \qquad [N/mm^2]$$

$$\sigma_V = \sqrt{\sigma_b^2 + 3\tau^2} = \frac{180}{k} \qquad [N/mm^2]$$

4.2 Stiffeners and Girders, which are to be considered as Longitudinal Strength Members

4.2.1 The section moduli and shear areas of horizontal stiffeners and girders, which are to be considered as longitudinal strength members, are to be determined according to Section 8, C.2.3.1 as for longitudinals. In this case for girders supporting transverse stiffeners the factors m = 1 and m_a = 0 are to be used.

4.2.2 Regarding buckling strength of girders, the requirements of B.1.3 are to be observed.

4.2.3 The scantlings of beams and girders of tank decks are also to comply with the requirements of Section 8, D.

4.2.4 For frames in tanks, see Section 8, C.1.2.2.

4.2.5 The stiffeners of tank bulkheads are to be attached at their ends by brackets according to Section 3, B.4.2. The scantlings of the brackets are to be determined according to the section modulus of the stiffeners. Brackets must be fitted where the length of the stiffeners exceeds 2 m.

The brackets of stiffeners are to extend to the next beam, the next floor, the next frame, or are to be otherwise supported at their ends.

4.2.6 Where stringers of transverse bulkheads are supported at longitudinal bulkheads or at the side shall, the supporting forces of these stringers are to be considered when determining the shear stress in the longitudinal bulkheads. Likewise, where vertical girders of transverse bulkheads are supported at deck or inner bottom, the supporting forces of these vertical girders are to be considered when determining the shear stresses in the deck or inner bottom respectively. The shear stress introduced by the stringer into the longitudinal bulkhead or side shell may be determined by the following formula:

$$\tau_{St} = \frac{P_{St}}{2 b_{St} t} \qquad [N/mm^2]$$

P_{St} = Supporting force of stringer or vertical girder [kN]

b_{St} = Breadth of stringer or depth of vertical girder including end bracket (if any) [m] at the supporting points

t = See B.1.2

The additional shear stress τ_{St} is to be added to the shear stress τ_L due to longitudinal bending according to Section 5, D.1 in the following area:

- 0.5 m on both sides of the stringer in the ship's longitudinal direction,
- $0.25 b_{St}$ above and below the stringer

Thereby the following requirement must be satisfied:

$$\frac{110}{k} \geq \frac{P_{St}}{2 b_{St} t} + \tau_L$$

5. Plating and Stiffeners in the Propeller Area and in the Engine Room

5.1 General

From a vibration point of view tank structures in the

vicinity of the propeller and the main engine should be designed such that the design criteria defined in 5.2 to 5.3 are fulfilled.

5.2 Tank Structures in Propeller Area

For vessels with a single propeller, plate fields and stiffeners of tank structures within d_r = 5 should fulfil the following frequency criteria:

For $\alpha \geq 60\ ^0C$ $\quad f_{plate} > \frac{6.3}{d_r} f_{blade}$

$$f_{stiff} > \frac{6.3}{d_r} f_{blade}$$

For $\alpha < 60\ ^0C$ $\quad f_{plate} > \frac{3.15}{d_r} f_{blade}$

α = Flare angle of frame section in propeller plane measured between a vertical line and the tangent to the bottom shell plating,

d_r = Ratio $\frac{x_r}{d_p}$

d_r needs not to be taken less than 1.3,

x_r = Distance of plate field or stiffener to 12 o'clock propeller blade tip position [m],

d_p = Propeller diameter [m],

f_{plate} = Lowest natural frequency of isotropic plate field under consideration of additional outfitting and hydrodynamic masses [Hz],

f_{stiff} = Lowest natural frequency of stiffener under consideration of additional outfitting and hydrodynamic masses [Hz],

f_{blade} = Propeller blade passage excitation frequency at n [Hz],

= $\frac{nZ}{60}$ [Hz]

n = Maximum propeller shaft revolution rate [1/min],

Z = Number of propeller blades,

f_{ign} = Main engine ignition frequency at n_e

= $\frac{k_{stroke} n_c n_e}{60}$ [Hz]

n_e = Maximum main engine revolution rate [1/min]

n_c = Number of cylinders of main engine

k_{stroke} = Number indicating the type of main engine

= 1.0 for 2-stroke (slow-running) main engines

= 0.5 for 4-stroke (medium speed) main engines (The number is valid for in-line engines. The ignition frequency for V-engines depends on the V-angle of the cylinder banks and can be obtained from the engine manufacturer)

5.3 Tank Structures in Main Engine Area

Plate fields and stiffeners of tanks located in the engine room should at all filling states fulfil the frequency criteria as summarized in Table 12.1.

Generally, direct connections between transverse engine top bracing and tank structures shall be avoided. Pipe fittings at tank walls etc. shall be designed in such a way that the same frequency criteria as given for plates are fulfilled.

6. Corrugated Bulkheads

6.1 The plate thicknesses of corrugated bulkheads as well as the required section moduli of corrugated bulkhead elements are to be determined according to 1 and 4, proceeding analogously to Section 11, B.6.

The plate thickness is not to be less than t_{min} according to B.2, or

$$t = \frac{b}{90.5}\sqrt{\sigma_D} + t_K \qquad \text{[mm]}$$

σ_D = Compressive stress [N/mm^2]

b = Breadth of face plate strip [cm].

6.2 For the end attachment Section 3, B.4 is to be observed.

Table 12.1 Frequency criteria

Engine type	Mounting type	Application area	Frequency criteria
Slow – Speed	Rigid	Tanks within engine room	$f_{plate} > 1.2 \cdot f_{ign}$ $f_{stiff} > 1.2 \cdot f_{ign}$ and $f_{plate} < 1.8 \cdot f_{ign}$ or $f_{plate} > 2.2 \cdot f_{ign}$
Medium – Speed	Rigid or semi-resilient	Tanks within engine room	$f_{plate} < 0.8 \cdot f_{ign}$ or $f_{plate} > 1.2 \cdot f_{ign}$ $f_{stiff} < 0.8 \cdot f_{ign}$ or $f_{stiff} > 1.2 \cdot f_{ign}$
	Resilient	Tanks within engine length up to next platform deck above inner bottom	$f_{plate} < 0.9 \cdot f_{ign}$ or $f_{plate} > 1.1 \cdot f_{ign}$

C. Tanks with Large Lengths or Breadths

1. General

Tanks with lengths ℓ_t >0.1L or breadths b_t >0.6B (e.g. hold spaces for ballast water) which are intended to be partially filled, are to be investigated to avoid resonance between the liquid motion and the pitch or roll motion of the ship. If necessary, critical tank filling ratios are to be avoided. The natural periods of the liquid in the tank may be determined by the following formula:

Natural period of liquid in tank:

$$T_{\ell,b} = 1.132\sqrt{\frac{e_t}{f}} \qquad [s]$$

ℓ_t = Tank length [m],

b_t = Tank breadth [m],

e_t = Characteristic tank dimension ℓ_t or b_t [m],

f = $\tanh\left(\frac{\pi h}{e_t}\right)$

T_P = Pitch period [s], as defined in Section 5, B.2,

T_R = Roll period [s], as defined in Section 5, B.3,

2. Hold Spaces for Ballast Water

In addition to the requirements specified under 1 above for hold spaces of dry cargo ships and bulk carriers, which are intended to be filled with ballast water, the following is to be observed:

2.1 For hold spaces only permitted to be completely filled, a relevant notice will be entered into the Certificate.

2.2 Adequate venting of the hold spaces and of the hatchway trunks is to be provided.

2.3 For frames also Section 8, C.1.2.2 is to be observed.

D. Vegetable Oil Tanks

1. Further to the regulations stipulated under A and B for vegetable oil tanks, the following requirements are to be observed.

2. Tanks carrying vegetable oil or similar liquids, the scantlings of which are determined according to B, are to be either fully loaded or empty. A corresponding note will be entered into the Certificate.

These tanks may be partially filled provided they are subdivided according to A.1. Filling ratios between 70 and 90 per cent should be avoided.

3. In tanks carrying vegetable oil or similar liquids sufficient air pipes are to be fitted for pressure equalizing. Expansion trunks of about 1 per cent of the tank volume are to be provided. Where the tank is subdivided by at least one centre line bulkhead, 3 per cent of the tank may remain empty and be used as expansion space.

E. Detached Tanks

1. General

1.1 Detached tanks are to be adequately secured against forces due to the ship's motions.

1.2 Detached tanks in hold spaces are also to be provided with anti-floatation devices. It is to be assumed that the hold spaces are flooded to the load water line. The stresses in the anti-floatation devices caused by the floatation forces are not to exceed the material's yield stress.

1.3 Detached oil fuel tanks should not be installed in cargo holds. Where such an arrangement cannot be avoided, provision is to be made to ensure that the cargo cannot be damaged by leakage oil.

1.4 Fittings and piping on detached tanks are to be protected by battens, and gutter ways are to be fitted on the outside of tanks for draining any leakage oil.

2. Scantlings

2.1 The thickness of plating of detached tanks is to be determined according to B.1 and the pressure P as defined in 2.2.

2.2 The section modulus of stiffeners of detached tanks is not to be less than:

$$W = Cs\ell^2Pk \qquad [cm^3]$$

C = 0.36 if stiffeners are constrained at both ends

= 0.54 if one or both ends are simply supported

For the terms "constraint" and "simply supported" see Section 3, B.4.

ℓ = Unsupported span [m] according to Section 3, B.

P = 9.81h [kN/m^2]

h = Head measured from the load centre of plate panel or stiffener respectively to the top of overflow; the height of overflow is not to be taken less than 2.5 m.

2.3 For minimum thickness the requirements of B.2 apply in general.

F. Potable Water Tanks

1. Potable water tanks shall be separated from tanks containing liquids other than potable water, ballast water, distillate or feed water.

2. In no case sanitary arrangement or corresponding piping are to be fitted directly above the potable water tanks.

3. Manholes arranged in the tank top are to have sills.

4. If pipes carrying liquids other than potable water are to be led through potable water tanks, they are to be fitted in a pipe tunnel.

5. Air and overflow pipes of potable water tanks are to be separated from pipes of other tanks.

G. Wash Bulkheads

1. The total area of perforation shall not be less than 5 % and should not exceed 10 % of the total bulkhead area.

2. The plate thickness shall, in general, be equal to the minimum thickness according to B.2. Strengthenings may be required for load bearing structural parts.

The free lower edge of a wash bulkhead is to be adequately stiffened.

3 The section modulus of the stiffeners and girders is to be determined in accordance with B.4.

4. For wash bulkheads in oil tankers see also Section 28, H.

H. Testing for Tightness

Testing of oil fuel, ballast, trimming, feed water, fresh water, cargo and anti-rolling tanks is to be effected by a combination of a leak test by means of air pressure and an operational test by means of water or the liquid for which the tank is to be observed (For testing procedures of watertight compartments, refer to Section 3, E.2.1 and E.2.2).

SECTION 13

SUPERSTRUCTURES AND DECKHOUSES

A. Introduction

1. General

1.1 The requirements in this section apply to arrangement and scantlings of superstructures and deckhouses.

2. Definitions

2.1 A superstructure is a decked structure on the freeboard deck extending from side to side of the ship or with the side plating not being inboard of the shell plating more than 0.04B.

2.2 A deckhouse is a decked structure above the strength deck the side plating being inboard of the shell plating more than 0.04B.

2.3 A long deckhouse is a deckhouse the length of which within 0.4L amidships exceeds 0.2L or 12 m, where the greater value is decisive. The strength of a long deckhouse is to be specially considered.

2.4 A short deckhouse is a deckhouse not covered by the definition given in 2.3.

2.5 Superstructures extending into the range of 0.4L amidships and the length of which exceeds 0.15L are defined as effective superstructures. Their side plating is to be treated as shell plating and their deck as strength deck, see Section 7.

2.6 All superstructures being located beyond 0.4L amidships or having a length of less than 0.15L or less than 12 meters are, for the purpose of this Section, considered as non-effective superstructures.

2.7 For deckhouses of aluminium, Section 3, A.4 is to be observed.

2.8 Scantlings of isolated funnels are to be determined as for deckhouses.

2.9 Throughout this Section the following definitions apply:

a_L = Longitudinal acceleration [m/s^2], as defined in Section 5, B.4,

a_T = Transverse acceleration [m/s^2], as defined in Section 5, B.3,

a_V = Vertical acceleration [m/s^2], as defined in Section 5, B.2,

A_D = Area of wall [m^2],

A_f = Loaded part of deckhouse front wall in [m^2],

b' = Breadth of deckhouse at the position considered,

B' = Actual maximum breadth of ship on the exposed weather deck at the position considered,

B = Ship breadth [m], as defined in Section 1, H.2,

C_B = Moulded block coefficient, as defined in Section 1, H.4,

C_L = Length coefficient according to Section 5, B.2,

C_W = Wave coefficient according to Section 5, B.2,

F_{Wa} = Water pressure load [kN],

F_{Wi} = Wind load [kN],

G = Mass of the fully equipped deckhouse [t],

h_N = Standard superstructure height [m],

h_W = Height of breakwater [m],

k = Material factor according to Section 3, A,

L = Ship length [m], as defined in Section 1, H.2,

L_C = Ship length according to ICLL [m], as defined in Section 1, H.2,

P_{DC} = Dynamic cargo load [kN/m^2], as defined in Section 5, D.6.1,

P_{DE} = Load on superstructure and deckhouse decks [kN/m^2], as defined in Section 5, D.5,

P_{IB} = Bow impact load [kN/m^2], as defined in Section 5, E.1,

P_{IS} = Stern impact load [kN/m^2], as defined in Section 5, E.2,

P_{SC} = Static cargo load [kN/m^2], as defined in Section 5, C.4.1,

P_{WD} = Wave load on weather deck [kN/m^2], as defined in Section 5, D.4.

P_{Wa} = Water pressure load [kN/m^2],

P_{Wi} = Wind load [kN/m^2],

P_{WS} = Wave load on side shell [kN/m^2], as defined in Section 5, D.2.2,

R_{eH} = Minimum nominal upper yield point [N/mm^2],

R_m = Tensile strength [N/mm^2],

s = Spacing of stiffeners [m],

t = Plate thickness [mm],

t_{min} = Minimum thickness according to Section 7, C.3,

t_K = Corrosion allowance according to Section 3, B,

ℓ = Unsupported span [m],

σ_n = Longitudinal tension [N/mm^2],

τ = Shear stress [N/mm^2],

τ_T = Torsion due to tightening torque [N/mm^2],

σ_V = Permissible equivalent stress [N/mm^2],

3. Arrangement of Superstructure

3.1 According to ICLL 66, Regulation 39, a minimum bow height is required at the forward perpendicular, which may be obtained by sheer extending for at least $0.15L_C$, measured from the forward perpendicular, or by fitting a forecastle extending from the stem to a point at least $0.07L_C$ abaft the forward perpendicular.

3.2 Ships carrying timber deck cargo and which are to be assigned the respective permissible freeboard, are to have a forecastle of the Rule height and a length of at least $0.07L_C$. Furthermore, ships the length of which is less than 100 m, are to have a poop of Rule height or a raised quarter deck with a deckhouse.

Note:
On ships to which timber freeboards are assigned Regulation 39 should relate to the summer load waterline and not to the timber summer load waterline.

4. Strengthenings at the Ends of Superstructures

4.1 At the ends of superstructures one or both end bulkheads of which are located within 0.4L amidships, the thickness of the sheer strake, the strength deck in a breadth of 0.1B from the shell, as well as the thickness of the superstructure side plating are to be strengthened as specified in Table 13.1. The strengthenings shall extend over a region from four frame spacings abaft the end bulkhead to four frame spacings forward of the end bulkhead.

Table 13.1 Strengthening [%] at the ends of superstructures

Type of superstructure	strength deck and sheer strake	side plating of superstructure
Effective according to 2.5	30	20
Non-effective according to 2.6	20	10

4.2 Under strength decks in way of $0.6L$ amidships, girders are to be fitted in alignment with longitudinal walls, which are to extend at least over three frame spacings beyond the end points of the longitudinal walls. The girders are to overlap with the longitudinal walls by at least two frame spacings.

5. Transverse Structure of Superstructures and Deckhouses

The transverse structure of superstructures and deckhouses is to be sufficiently dimensioned by a suitable arrangement of end bulkheads, web frames, steel walls of cabins and casings, or by other measures.

6. Openings in Closed Superstructures

6.1 All access openings in end bulkheads of closed superstructures shall be fitted with weather tight doors permanently attached to the bulkhead, having the same strength as the bulkhead. The doors shall be so arranged that they can be operated from both sides of the bulkhead. The coaming heights of the access opening above the deck are to be determined according to ICLL 66.

6.2 Any opening in a superstructure deck or in a deckhouse deck directly above the freeboard deck (deckhouse surrounding companionways), is to be protected by efficient weather tight closures.

B. Side Plating and Decks of Non-Effective Superstructures

1. Side Plating

1.1 The thickness of the side plating of non-effective superstructures above the strength deck is not to be less than the greater of the following values:

$t = 1.21s\sqrt{Pk} + t_K$ [mm] , or

$t = 0.8t_{min}$ [mm]

For ships engaged in sheltered water service (assigned with **K6**, **L1** and **L2**) **t** is not to be less than 3,5 mm.

k = Material factor according to Section 3, A,

t_K = Corrosion allowance according to Section 3, B,

P = P_{WS}, P_{IB} or P_{IS}, as the case may be,

P_{WS} = Wave load on side shell [kN/m^2], as defined in Section 5, D.2.2,

P_{IB} = Bow impact load [kN/m^2], as defined in Section 5, E.1,

P_{IS} = Stern impact load [kN/m^2], as defined in Section 5, E.2,

t_{min} = Minimum thickness according to Section 7, C.3.

1.2 The thickness of the side plating of upper tier superstructures may be reduced if the stress level permits such reduction.

2. Deck Plating

2.1 The thickness of deck plating is not to be less than the greater of the following values:

$t = 1.21s\sqrt{P_{DE}k} + t_K$ [mm]

$t = 1.10s\sqrt{(P_{SC} + P_{DC})\,k} + t_K$ [mm]

$t = (5.5 + 0.02L)\sqrt{k}$ [mm]

where:

P_{DE} = Load on superstructure and deckhouse decks [kN/m^2], as defined in Section 5, D.5

P_{SC} = Static cargo load [kN/m^2], as defined in Section 5, C.4.1

P_{DC} = Dynamic cargo load [kN/m^2], as defined in Section 5, D.6.1

2.2 Where additional superstructures are arranged on non-effective superstructures located on the strength deck, the thickness required by 2.1 may be reduced by 10 per cent.

2.3 Where plated decks are protected by sheathing, the thickness of the deck plating according to 2.1 and 2.2 may be reduced by t_K, however, it is not to be less than 5 mm.

Where sheathing other than wood is used, attention is to be paid that the sheathing does not affect the steel. The sheathing is to be effectively fitted to the deck.

3. Frames, Deck Beams and Supporting Deck Structure

3.1 The scantlings of the deck beams and the supporting deck structure are to be determined in accordance with Section 8.D.

3.2 The scantlings of superstructure frames are given in Section 8, C.1.3.

C. Superstructure End Bulkheads and Deckhouse Walls

1. General

The following requirements apply to superstructure end bulkheads and deckhouse walls forming the only protection for openings as per Regulation 18 of ICLL 66 and for accommodations.

2. Design Loads

The design load for determining the scantlings is:

$$P_A = nc(b \cdot f - z) \qquad [kN/m^2]$$

$$f = \frac{L}{10} e^{-L/300} - \left[1 - \left(\frac{L}{150}\right)^2\right] \quad \text{for } L<150 \text{ m.}$$

$$f = \frac{L}{10} e^{-L/300} \quad \text{for } 150 \text{ m} < L < 300\text{m}$$

$f = 11.03$ for $L>300$m

$$n = 20 + \frac{L}{12}$$

for the lowest tier of unprotected fronts. The lowest tier is normally that tier which is directly situated above the uppermost continuous deck to which the Rule depth D is to be measured. However, where the actual distance exceeds the minimum non-corrected tabular freeboard according to ICLL 66 by at least one standard superstructure height, h_N, this tier may be defined as the 2nd tier and the tier above as the 3rd tier.

n = for 2nd tier unprotected fronts

$n = 5 + \frac{L}{15}$ for 3rd tier and tiers above of unprotected fronts, for sides and protected fronts

$n = 7 + \frac{L}{100} - \frac{8x}{L}$ for aft ends abaft amid ships

$n = 5 + \frac{L}{100} - \frac{4x}{L}$ for aft ends forward of amidships

$n = 10 + \frac{L}{20}$ for breakwaters forward of $\frac{x}{L} \geq 0.85$

L need not be taken greater than 300 m.

h_N = Standard superstructure height [m]

= $1.05 + 0.01L$ [m] $1.8 \leq h_N \leq 2.3$

x = Distance [m] between the bulkhead considered and aft end of the length L. When determining sides of a deckhouse, the deckhouse is to be subdivided into parts of approximately equal length, not exceeding 0.15L each, and x is to be taken as the distance between aft end of the length L and the centre of each part considered.

z = Vertical distance [m] from the summer load line to the midpoint of stiffener span, or to the middle of the plate field.

$$b = 1.0 + \left(\frac{\frac{x}{L} - 0.45}{C_B + 0.2} \right)^2 \quad \text{for} \quad \frac{x}{L} < 0.45$$

$$b = 1.0 + 1.5 \left(\frac{\frac{x}{L} - 0.45}{C_B + 0.2} \right)^2 \quad \text{for} \quad \frac{x}{L} \geq 0.45$$

$$b = 1.0 + 2.75 \left(\frac{\frac{x}{L} - 0.45}{C_B + 0.2} \right)^2 \quad \text{for breakwaters} \quad \frac{x}{L} \geq 0.85$$

C_B = Moulded block coefficient, as defined in Section 1, H.4.

= $0.60 \leq C_B \leq 0.80$, in general. Need not be taken less than 0.80 when determining scantlings of aft ends forward of amidships.

c = $0.3 + 0.7 \frac{b'}{B'}$

= Not to be taken less than 1.0 for exposed parts of machinery casings.

b′ = Breadth of deckhouse at the position considered

B′ = Actual maximum breadth of ship on the exposed weather deck at the position considered.

$\frac{b'}{B'}$ is not to be taken less than 0.25.

The design load P_A up to the third tier inclusive is not to be taken less than the minimum values given in Table 13.2. For breakwaters, the minimum design load is to be the same as for the lowest tier of unprotected fronts.

Table 13.2 Minimum design load $P_{A\,min}$ [kN/m^2]

L [m]	lowest tier of unprotected fronts	elsewhere
L ≤ 50	30	15
250 > L > 50	25 + L/10	12.5 + L/20
L ≥ 250	50	25

For the 4th tier P_{Amin} is to be taken as 12.5 kN/m^2, for the 5th tier and all following ones P_{Amin} is to be taken as 8.5 kN/m^2.

3. Scantlings

3.1 Stiffeners

The section modulus of the stiffeners is to be determined according to the following formula:

$$W = 0.35\, s\, \ell^2\, P_A\, k \qquad [cm^3]$$

s = Spacing of stiffeners [m]

ℓ = Unsupported span [m]; ℓ is to be taken as the superstructure height or deckhouse height respectively, however, not less than 2.0 m.

P_A = Design load [kN/m^2], as defined in 2.

These requirements assume the webs of lower tier stiffeners to be efficiently welded to the decks. Scantlings for other types of end connections may be specially considered.

The section modulus of house side stiffeners need not be greater than that of side frames on the deck situated directly below; taking account of spacing s and unsupported span ℓ.

3.2 Plate Thickness

The thickness of the plating is to be determined according to the following formula:

$$t = 0.9 s \sqrt{P_A k} + t_K \qquad [mm]$$

$$t_{min} = \left(5.0 + \frac{L}{100} \right) \sqrt{k} \qquad \text{for the lowest tier}$$

$$t_{min} = \left(4.0 + \frac{L}{100} \right) \sqrt{k} \qquad \text{for the upper tiers, however, not less than 5.0 mm.}$$

L need not be taken greater than 300 m.

D. Decks of Short Deckhouses

1. Plating

The thickness of deck plating exposed to weather but not protected by sheathing is not to be less than:

$$t = 8s\sqrt{k} + t_K \qquad [mm]$$

For decks exposed to weather protected by sheathing and for decks within deckhouses the thickness may be reduced by t_K.

In no case the thickness is to be less than the minimum thickness t_{min} = 5.0 mm.

2. Deck Beams

The deck beams and the supporting deck structure are to be determined according to Section 8, D.

E. Elastic Mounting of Deckhouses

1. General

1.1 The elastic mountings are to be type approved by **TL**. The stresses acting in the mountings which have been determined by calculation are to be proved by means of prototype testing on testing machines. Determination of the grade of insulation for transmission of vibrations between hull and deckhouses is not part of this type approval.

1.2 The height of the mounting system is to be such that the space between deck and deckhouse bottom remains accessible for repair, maintenance and inspection purposes. The height of this space shall normally not be less than 600 mm.

1.3 For the fixed part of the deckhouse on the weather deck, a coaming height of 380 mm is to be observed, as required by ICLL 66 for coamings of doors in superstructures which do not have access openings to under deck spaces.

1.4 For pipelines, see Chapter 4 - Machinery, Section 11.

1.5 Electric cables are to be fitted in bends in order to facilitate the movement. The minimum bending radius prescribed for the respective cable is to be observed. Cable glands are to be watertight. For further details, see Electrical Installations.

1.6 The following scantling requirements for rails, mountings, securing devices, stoppers and sub-structures in the hull and the deckhouse bottom apply to ships in unrestricted service. For special ships and for ships intended to operate in restricted service ranges requirements differing from those given below may be applied.

2. Design Loads

For scantling purposes the following design loads apply:

2.1 Weight

2.1.1 The weight induced loads result from the weight of the fully equipped deckhouse, considering also the acceleration due to gravity and the acceleration due to the ship's movement in the seaway. The weight induced loads are to be assumed to act in the centre of gravity of the deckhouse.

Vertical, horizontal and longitudinal components of the design load is as follows:

$P_V = Ga_V$ [kN]

$P_T = Ga_T$ [kN]

$P_L = Ga_L$ [kN]

G = Mass of the fully equipped deckhouse [t],

a_L = Longitudinal acceleration [m/s^2], as defined in Section 5, B.4,

a_T = Transverse acceleration [m/s^2], as defined in Section 5, B.3,

a_V = Vertical acceleration [m/s^2], as defined in Section 5, B.2.

2.1.2 The scantlings are to be determined for the respective support forces in the vertical, transverse and horizontal directions.

2.2 Water Pressure and Wind Pressure

2.2.1 The water load due to the wash of the sea is assumed to be acting on the front wall in the longitudinal direction only. The design load is:

$P_{Wa} = 0.5\,P_A$ [kN/m^2]

P_A = Design load [kN/m^2], as defined in C.2.

The water pressure is not to be less than:

$P_{Wa} = 25$ [kN/m^2] the lower edge of the front wall

$P_{Wa} = 0$ [kN/m^2] at the level of the first tier above the deckhouse bottom

$F_{Wa} = P_{Wa} A_f$ [kN]

A_f = Loaded part of deckhouse front wall [m^2]

2.2.2 The design wind load acting on the front wall and on the side walls is:

$F_{Wi} = P_{Wi}\,A_D$ [kN]

A_D = Area of wall [m^2]

P_{Wi} = 1.0 [kN/m^2].

2.3 Load on the Deckhouse Bottom

The load on the deckhouse bottom is governed by the load acting on the particular deck on which the deckhouse is located. Additionally, the support forces resulting from the loads specified in 2.1 and 2.2 are to be taken into account.

2.4 Load on Deck Beams and Girders

For designing the deck beams and girders of the deck on which the deckhouse is located, the following loads are to be taken:

- Below the deckhouse: Load according to the pressure head due to the distance between the supporting deck and the deckhouse bottom,
- Outside the deckhouse: Wave load on weather decks (P_{WD}), see Section 5, D.4,
- Bearing forces in accordance with the load assumptions 2.1 and 2.2.

3. Load Cases

3.1 For design purposes the following load cases are to be investigated separately (see also Figure 13.1):

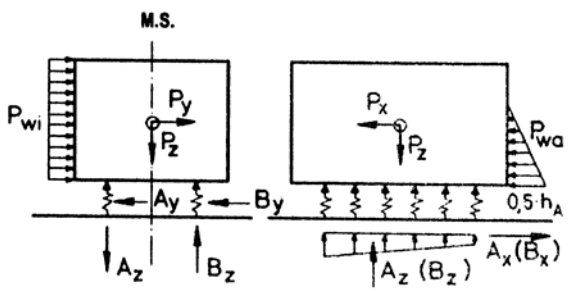

Figure 13.1 Design loads due to wind and water pressure

3.2 Service Load Cases

Forces due to external loads:

3.2.1 Transverse direction (z-y-plane)

$F_{T1} = Ga_T + F_{Wi}$ [kN] acting in transverse direction

$F_{V1} = Ga_V$ [kN] acting vertically to the baseline

F_{Wi} = Wind load as defined in 2.2.2.

a_T = Transverse acceleration [m/s^2], as defined in Section 5, B.3.

a_V = Vertical acceleration [m/s^2], as defined in Section 5, B.2.

3.2.2 Longitudinal direction (z-x-plane)

$F_{L1} = Ga_L + F_{Wa} + F_{Wi}$ [kN] acting in longitudinal direction

$F_{V1} = Ga_V$ [kN] acting vertically to the baseline

F_{Wa} = Water pressure load as defined in 2.2.1.

a_L = Longitudinal acceleration [m/s^2], as defined in Section 5, B.4.

3.2.3 For designing the securing devices to prevent the deckhouse from being lifted, the force (in upward direction) is not to be taken less than determined from the following formula:

$F_{Vmin} = 0.5g\,G$ [kN]

3.3 Extraordinary Load Cases

3.3.1 Collision Force in Longitudinal Direction:

$F_{L2} = 0.5g\,G$ [kN]

3.3.2 Forces due to Static Heel of 45°

Force acting in transverse direction:

$F_{T2} = 0.71g\,G$ [kN]

Force acting vertically to the baseline:

$F_{V2} = 0.71gG$ [kN]

3.3.3 The possible consequences of a fire for the elastic mounting of the deckhouse are to be examined (e.g. failure of rubber elastic mounting elements, melting of glue). Even in this case, the mounting elements between hull and deckhouse bottom must be capable of withstanding the horizontal force F_{T2} as per 3.3.2 in transverse direction.

3.3.4 For designing of the securing devices to prevent the deckhouse from being lifted, a force not less than the buoyancy force of the deckhouse resulting from a water level of 2 m. above the freeboard deck is to be taken.

4. Scantlings of Rails, Mounting Elements and Substructures

4.1 General

4.1.1 The scantlings of those elements are to be determined in accordance with the load cases stipulated under 3. The effect of deflection of main girders need not be considered under the condition that the deflection is so negligible that all elements take over the loads equally.

4.1.2 Strength calculations for the structural elements with information regarding acting forces are to be submitted for approval.

4.2 Permissible Stresses

4.2.1 The permissible stresses given in Table 13.3 are not to be exceeded in the rails and the steel structures of mounting elements and in the substructures (deck beams, girders of the deckhouse and the deck, on which the deckhouse is located).

Table 13.3 Permissible stress in the rails and the steel structures at mounting elements and in the substructures [N/mm^2]

Type of stress	Service load cases	Extraordinary load cases
Normal stress σ_n	$0.6R_{eH}$ or $0.40R_m$	$0.75R_{eH}$ or $0.50R_m$
Shear stress τ	$0.35R_{eH}$ or $0.23R_m$	$0.43R_{eH}$ or $0.30R_m$
Equivalent stress $\sigma_V = \sqrt{\sigma_n^2 + 3\tau^2}$	$0.75R_{eH}$	$0.90R_{eH}$

R_{eH} = Minimum nominal upper yield point
R_m = Tensile strength

4.2.2 The permissible stresses for designing the elastic mounting elements of various systems will be considered from case to case. Sufficient data are to be submitted for approval.

4.2.3 The stresses in the securing devices to prevent the deckhouse from being lifted are not to exceed the stress values specified in 4.2.1.

4.2.4 In screwed connections, the permissible stresses given in Table 13.4 are not to be exceeded.

4.2.5 Where turnbuckles in accordance with DIN 82008 are used for securing devices, the load per bolt under load conditions 3.2.3 and 3.3.4 may be equal to the proof load (2 times safe working load).

5. Corrosion Addition

For the deck plating below elastically mounted deckhouses a minimum corrosion addition of t_K = 3.0 mm applies.

Table 13.4 Permissible stress in screwed connections [N/mm^2]

Type of stress	Working load cases	Extraordinary load cases
Longitudinal tension σ_n	$0.5R_{eH}$	$0.8R_{eH}$
Bearing pressure p_l	R_{eH}	R_{eH}
Equivalent stress from longitudinal tension σ_n, torsion τ_t (due to tightening torque) and shear (if applicable) $\sigma_V = \sqrt{\sigma_n^2 + 3\left(\tau^2 + \tau_t^2\right)}$	$0.6R_{eH}$	R_{eH}

F. Breakwater

1. Arrangement

If cargo is intended to be carried on deck forward of x/L ≥ 0.85, a breakwater or an equivalent protecting structure (e.g. whaleback or turtle deck) is to be installed.

2. Dimensions of the Breakwater

2.1 The recommended height of the breakwater is

$$h_W = 0.8\left(b\,C_L\,C_W - z\right) \qquad [m]$$

but shall not be less than

$$h_{Wmin} = 0.6\left(b\,C_L\,C_W - z\right) \qquad [m]$$

b = See C.1.

C_L = Length coefficient according to Section 5, B.2

C_W = Wave coefficient according to Section 5, B.2

z = The vertical distance [m] between the summer load line and the bottom line of the breakwater.

The average height of whalebacks or turtle decks has to be determined analogously.

2.2 The breakwater has to be at least as broad as the width of the area behind the breakwater, intended for carrying deck cargo.

3. Cutouts

Cutouts in the webs of primary supporting members of the breakwater are to be reduced to their necessary minimum. Free edges of the cutouts are to be reinforced by stiffeners.

If cutouts in the plating are provided to reduce the load on the breakwater, the area of single cutouts should not exceed 0.2 m^2 and the sum of the cutout areas not 3 % of the overall area of the breakwater plating.

4. Loads

The loads for dimensioning are to be taken from C.2.

5. Plate Thickness and Stiffeners

5.1 The plate thickness has to be determined according to C.3.2.

5.2 The section moduli of stiffeners are to be calculated according to C.3.1. Stiffeners are to be connected on both ends to the structural members supporting them.

6. Primary Supporting Members

For primary supporting members of the structure a stress analysis has to be carried out.

Sufficient supporting structures are to be provided.

The permissible equivalent stress is $\sigma_V = R_{eH}/k$ [N/mm^2].

7. Proof of Buckling Strength

Structural members' buckling strength has to be proved according to Section 3, C.

SECTION 14

ICE STRENGTHENING

Page

A. General

1. Application

1.1 The requirements in this section to apply to vessels intended for navigation in waters with ice conditions.

1.2 Ships dealt with in this Section are to comply with the requirements of Sections 1 ÷ 21 and additionally with the requirements of this Section.

2. Class Notation

2.1 Vessels built in accordance with the requirements of this Section are to be assigned the class notation **"ICE-B4", "ICE-B3", "ICE-B2", "ICE-B1"** or **"ICE-B".**

2.2 The requirements for the ice class notations **ICE-B4 ÷ ICE-B1** embody all necessary conditions to be complied with for assignment of the ice classes IC – IA Super according to the Finnish-Swedish Ice Class Rules 2010 (23.11.2010 TRAFI / 31298 / 03.04.01.00 / 2010). Reference is also made to the Guidelines for the Application of the Finnish-Swedish Ice Class Rules (see 20.12.2011 TRAFI / 21816 / 03.04.01.01 / 2011).

The ice class notations **ICE-B4 ÷ ICE-B1** are equivalent to the Finnish-Swedish Ice Class Rules for service in the northern Baltic in winter.

TL ice classes are accepted as equivalent to the Finnish-Swedish ice classes as follows:

TL ICE CLASS	FINNISH-SWEDISH ICE CLASS
ICE-B4	IA Super
ICE-B3	IA
ICE-B2	IB
ICE-B1	IC

2.3 Ships intended for navigation in Arctic waters may have the ice class notations **PC7 ÷ PC1** affixed to their character of classification if the guidelines given in Chapter 33 – Rules for the Construction of Polar Class Ships are complied with.

2.4 The ice class notations **ICE-B4 ÷ ICE-B1** can only be assigned to self-propelled ships when in addition to the requirements of this Section also the relevant items of Chapter 4 Machinery Section 19 are complied with. For example, the full Character of Classification then reads:

+1A5 ICE-B1 +M ICE-B1. Where the hull only is strengthened for a higher ice class notation, a corresponding entry will be made in the Technical File to the Class Certificate.

2.5 Ships which beyond the requirements for the ice class notations ICE-B, ICE-B1 to ICE-B4 or PC7 to PC1 have been specially designed, dimensioned and/or equipped for icebreaking will have affixed the notation **ICEBREAKER** in addition. Dimensioning of the structure with regard to the foreseen area of operation has to be harmonized with **TL**.

3. Assumptions

3.1 The method for determining the hull scantlings, engine output and other properties are based on certain assumptions concerning the nature of the ice load on the structure and operation of the ship as described in the Finnish-Swedish Ice Class Rules.

ICE-B4 Normally capable of navigating in difficult ice conditions without the assistance of icebreakers

ICE-B3 Capable of navigating in difficult ice conditions with the assistance of icebreakers when necessary

ICE-B2 Capable of navigating in moderate ice conditions with the assistance of icebreakers when necessary

ICE-B1 Capable of navigating in light ice conditions with the assistance of icebreakers when necessary

ICE-B This notation is assigned to ships operate in where drift ice in mouths of rivers and coastal regions occurs (refer to Subsection E).

3.2 If the scantlings required by this Section are less than those required for ships without ice strengthening, the scantlings required by the other Sections of these Rules are to be maintained.

3.3 Assistance from icebreakers is normally assumed when navigating in ice bound waters.

B. Ice Class Draught for Ships with Notations ICE-B4 ÷ ICE-B1

1. Upper and Lower Ice Waterline

1.1 The upper ice waterline (UIWL) is to be the envelope of the highest points of the waterlines at which the ship is intended to operate in ice.

1.2 The lower ice waterline (LIWL) is to be the envelope of the lowest points of the waterlines at which the ship is intended to operate in ice.

1.3 Both the UIWL and LIWL may be broken lines.

2. Maximum and Minimum Draught Fore and Aft

2.1 The maximum and minimum ice class draughts at the forward perpendicular amidships and at the aft perpendicular are to be determined in accordance with the upper/lower ice waterlines and are to be stated in the drawings submitted for approval. The ice class draughts, the minimum propulsion machinery output, P, according to C.2, as well as the corresponding ice class, will be stated in the Technical File to the Class Certificate.

If the summer load line in fresh water is anywhere located at a higher level than the UIWL, the ship's sides are to be provided with a warning triangle and with an ice class draught mark at the maximum permissible ice class draught amidships (see Annex of Chapter 1).

2.2 The draught and trim, limited by the UIWL, are not to be exceeded when the ship is navigating in ice. The salinity of the sea water along the intended route is to be taken into account when loading the ship.

The ship is always to be loaded down at least to the LIWL when navigating in ice. The LIWL is to be agreed upon with the owners. Any ballast tank adjacent to the side shell and situated above the LIWL, and needed to load the ship down to this waterline, is to be equipped with devices to prevent the water from freezing. In determining the LIWL, regard is to be paid to the need for ensuring a reasonable degree of ice-going capability in ballast. The propeller is to be fully submerged, entirely below the ice, if possible.

2.3 The minimum draught Tmin at the forward perpendicular is not to be less than determined by the following formula:

$$T_{min} = h_0 \cdot (2 + 2.5 \cdot 10^{-4} \cdot D) \quad [m] \text{ or}$$

$$T_{min} = 4 \cdot h_0 \quad [m]$$

D = Displacement of the ship in [t] on the maximum ice class draught according to 2.1

h_0 = Design ice thickness according to D.2.2.1.

C. Output of Propulsion Machinery

1. Definition of Propulsion Machinery Output

The propulsion machinery output P is the maximum output the propulsion machinery can continuously deliver to the propeller(s). If the output of the machinery is restricted by technical means or by any regulations applicable to the ship, P is to be taken as the restricted output.

2. Required Minimum Power for Class Notations ICE-B4 ÷ ICE-B1

2.1 The propulsion machinery output is not to be less than determined by the following formula:

$$P = K_e \frac{(RCH/1000)^{3/2}}{DP} \quad [kW]$$

The required propulsion machinery output, P, is to be calculated for ships on both the **UIWL** and the **LIWL**. The propulsion machinery output shall not be less than the greater of these two outputs.

P_{min} = 2800 kW for ice class notation **ICE-B4**

= 1000 kW for ice class notations **ICE-B3, ICE-B2** and **ICE-B1**

K_e = is to be taken from Table 14.1

The values in Table 14.1 apply only to conventional propulsion systems. Other methods may be used 'for determining the K_e values for advanced propulsion systems as specified in 3.

Table 14.1 Factor K_e

Number of propellers	K_e	
	Controllable pitch propeller or electric or hydraulic propulsion machinery	**Fixed pitch propeller**
1 propeller	2.03	2.26
2 propeller	1.44	1.60
3 propeller	1.18	1.31

D_P = Diameter of the propeller(s) [m]

R_{CH} = Ice resistance of the ship in a channel with brash ice and a consolidated surface layer:

$$R_{CH} = C_1 + C_2 + C_3 \cdot C_\mu (H_F + H_M)^2 \cdot \left(\mathbf{B} + C_\psi \cdot H_F\right)$$

$$+ C_4 \cdot L_{PAR} \cdot H_F^2 + C_5 \left(\frac{L_{pp} \cdot \mathbf{T}}{\mathbf{B}^2}\right)^3 \cdot \frac{A_{wf}}{L_{pp}} \quad [N]$$

The quantity $\left(\frac{L_{pp} \cdot \mathbf{T}}{\mathbf{B}^2}\right)^3$ is not to be taken less than 5 and not to be taken more than 20.

C_1, C_2 = Factors to take into account a consolidated upper layer of the brash ice and can be taken as zero for ice class notations **ICE-B3, ICE-B2, ICE-B1.**

For ice class **ICE-B4**:

$$C_1 = f_1 \frac{\mathbf{B} \cdot L_{PAR}}{2\frac{\mathbf{T}}{\mathbf{B}} + 1} + \left(1 + 0.021\varphi_1\right)$$

$$\cdot (f_2 \cdot B + f_3 \cdot L_{BOW} + f_4 \cdot B \cdot L_{BOW})$$

$$C_2 = (1 + 0.063\varphi_1) \cdot (g_1 + g_2 \cdot \mathbf{B}) + g_3 \left(1 + 1.2\frac{T}{B}\right) \frac{\mathbf{B}^2}{\sqrt{L_{pp}}}$$

C_3 = 845 [kg/m^2/sn^2]

C_4 = 42 [kg/m^2/sn^2]

C_5 = 825 [kg/m^2/sn^2]

C_μ = $0.15 \cos\varphi_2 + \sin\psi \cdot \sin\alpha$; $C_\mu \geq 0.45$

C_ψ = $0.047\,\psi - 2.115$; $C_\psi = 0$ for $\psi \leq 45°$

H_F = Thickness of the brash ice layer displaced by the bow [m]

= $0.26 + (H_M \cdot \mathbf{B})^{0.5}$

H_M = Thickness of the brash ice in mid channel [m]

= 1.0 for ice class notation **ICE-B4** and **ICE-B3**

= 0.8 for ice class notations **ICE-B2**

= 0.6 for ice class notation **ICE-B1**

The ship parameters defined below are to be calculated on the **UIWL** using a horizontal waterline passing through the maximum ice class draught amidships and on the **LIWL** using a horizontal waterline passing through the minimum ice class draught amidships. The ship dimensions $\mathbf{L_{PP}}$ and **B**, however, are always to be calculated on the **UIWL**. See also Figure 14.1.

$\mathbf{L_{PAR}}$ = Length of the parallel midship body [m].

$\mathbf{L_{pp}}$ = Length of the ship between perpendiculars [m]

$\mathbf{L_{BOW}}$ = Length of the bow [m],

T = Maximum and minimum ice class draught amidship [m]

A_{wf} = Area of the waterplane of the bow [m^2],

φ_1 = Rake of the stem at the centreline [deg].

For a ship with a bulbous bow, φ_1 shall be taken as 90°,

φ_2 = The rake of the bow at **B**/4 [deg], φ_{2max}= 90°

α = The angle of the waterline at **B**/4 [deg],

$$\Psi = \arctan\left(\frac{\tan\varphi_2}{\sin\alpha}\right)$$

f_1 = 23 [N/m^2]	g_1 = 1530 [N]
f_2 = 45.8 [N/m]	g_2 = 170 [N/m]
f_3 = 14.7 [N/m]	g_3 = 400 [N/$m^{1,5}$]
f_4 = 29 [N/m^2]	

The ranges of parameters used in the validation of the above formulae are shown in Table 14.2. If any of the ship's parameters are outside these ranges of validity, other methods for determining R_{CH} are to be used as specified in 3. When calculating the parameter D_p/T, T shall be measured on the **UIWL** amidships.

Table 14.2 Range of application of the formula for ship resistance R_{CH}

Parameter	Minimum	Maximum
α [°]	15	55
φ_1 [°]	25	90
φ_2 [°]	10	90
L_{pp} [m]	65.0	250.0
B [m]	11.0	40.0
T [m]	4.0	15.0
L_{BOW} / L_{pp}	0.15	0.40
L_{PAR} / L_{pp}	0.25	0.75
D_p / T	0.45	0.75
A_{wf} / (L_{pp} · B)	0.09	0.27

3. Other Methods of Determining K_e or R_{CH}

For an individual ship, in lieu of the K_e or R_{CH} values defined in 2, the use of K_e values based on more exact calculations or R_{CH} values based on model tests may be approved. The model test report is to be submitted to **TL**.

Such an approval will be given on the understanding that they can be revoked if warranted by the actual performance of the ship in ice.

The design requirement for ice classes is a minimum speed of 5 knots in the following brash ice channels:

ICE-B4 = H_M = 1.0 m. and a 0,1 m. thick consolidated layer of ice

ICE-B3 = H_M = 1.0 m.

ICE-B2 = H_M = 0.8 m.

ICE-B1 = H_M = 0.6 m.

D. Ice Strengthening for Class Notations ICE-B4÷ICE-B1

1. Definitions

Note: *While defining ice belt regions, L shall be taken as the ship's rule length.*

1.1 Ice belt

The ice belt is the zone of the shell plating which is to be strengthened. The ice belt is divided into regions as follows, see Figure 14.2:

1.1.1 Bow region

Bow region is the region from the stem to a line parallel to and at the distance "a" aft of the forward borderline of the part of the hull where the waterlines run parallel to the centerline.

The distance "a" is to be 0.04L (however not exceeding 6 m for ice class notations ICE-B3 and ICE-B4 and not exceeding 5 m for ice class notations ICE-B1 and ICE-B2) and is to be 0.02L (however not exceeding 2 m for ICE-B)

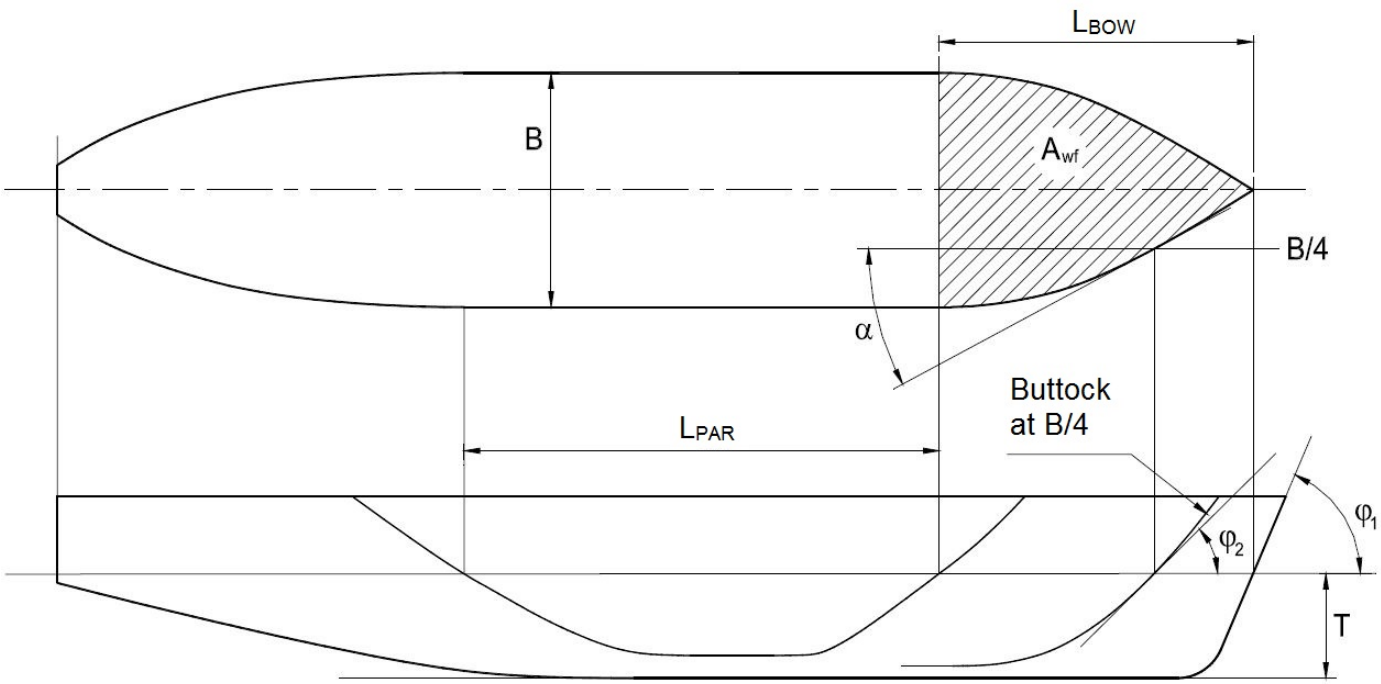

Figure 14.1 Rake of the stem φ_1 and rake of the bow φ_2 at B/4 from CL

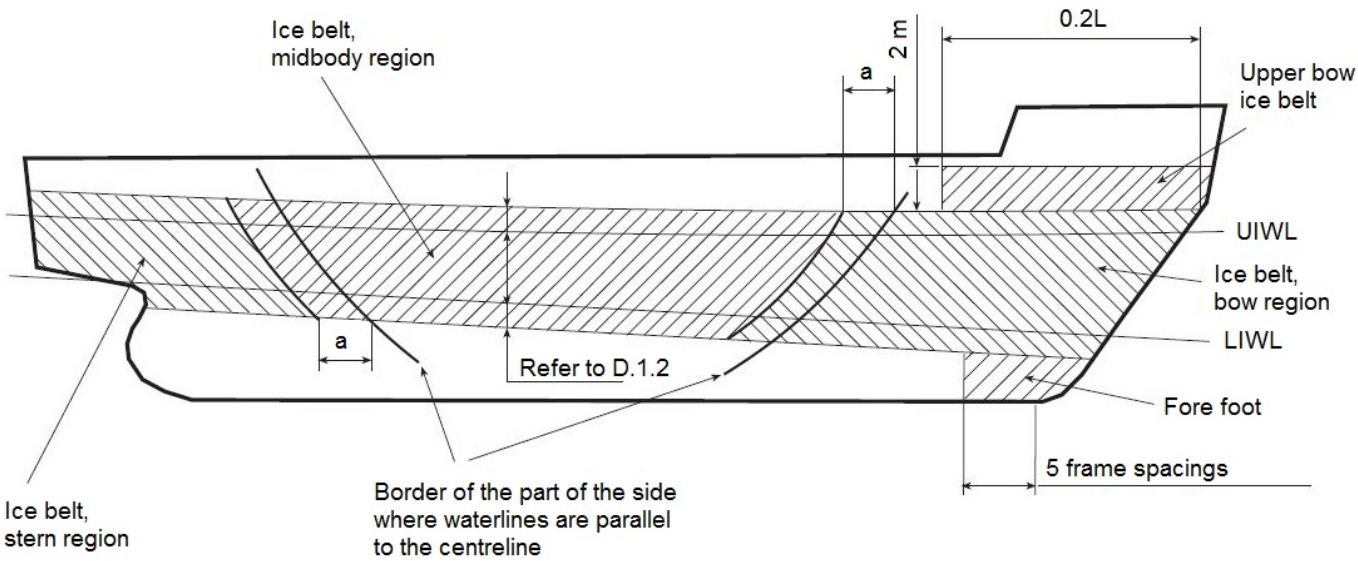

Note: Refer to Item D.1.1.1 for the distance "a"

Figure 14.2 Ice belt

1.1.2 Midbody region

Midbody region is the region from the aft boundary of the bow region, as defined in 1.1.1 to a line parallel to and at the distance “a” aft of the borderline between the parallel midbody region and the aft ship.

Note: *Refer to 1.1.1 for the distance “a”.*

1.1.3 Stern region

Stern region is the region from the aft boundary of the midbody region, as defined in 1.1.2 to the stern.

1.1.4 Forefoot region

Fore foot is (for ice class ICE-B4 only) the shell plating below the ice belt from the stem to a position five main frame spaces abaft the point where the bow profile departs from the keel line

1.1.5 Upper bow ice belt region

Upper bow ice belt is (only for ships with ice classes ICE-B4 and ICE-B3 and with an open water service speed equal to or exceeding 18 knots) the shell plate from the upper limit of the ice belt to 2 m above it and from the stem to a position at least 0.2 L abaft the forward perpendicular.

1.2 The vertical extension of the bow, midbody and stern regions is to be determined from Table 14.3.

1.3 On the shell expansion plan submitted for approval, the location of the UIWL, LIWL and the upper/ lower limits of the ice belt, as well as the bow, midbody and stern regions (including forefoot and upper bow ice belt regions, if applicable), are to be clearly indicated.

2. Design Loads

Note: *Terms to be used in this item 2 may be assigned in general as given below;*

a = *Frame spacing [m], longitudinal or transverse, taking into account the intermediate frames, if fitted.*

ℓ = *Unsupported span [m] of frames, web frames, stringer.*

p = *Design ice pressure according to 2.2.2*

h = *Design height of ice pressure area [m] according to 2.2.1*

The frame spacing and spans are normally to be measured in a vertical plane parallel to the centreline of the ship. However, if the ship's side deviates more than 20 ° from this plane, the frame spacing and spans are to be measured along the side of the ship (also refer to Finnish-Swedish Ice Class Rules 2010 item 4.1)

Table 14.3 Vertical extension of the ice belt regions

Ice class notation	Hull region	Above UIWL in [m]	Below LIWL in [m]
ICE-B4	Bow	0,60	1,20
	Midbody		
	Stern		1,00
ICE-B3	Bow	0,50	0,90
	Midbody		0,75
	Stern		
ICE-B2, ICE-B1, ICE-B	Bow	0,40	0,70
	Midbody		0,60
	Stern		

2.1 General

2.1.1 The method for determining the hull scantlings is based on certain assumptions concerning the nature of the ice load on the structure. These assumptions are from full scale observations made in the northern Baltic.

It has thus been observed that the local ice pressure on small areas can reach rather high values.

This pressure may be well in excess of the normal uniaxial crushing strength of sea ice. The explanation is that the stress field in fact is multiaxial.

Further, it has been observed that the ice pressure on a frame can be higher than on the shell plating at midspacing between frames. The explanation for this is the different flexural stiffness of frames and shell plating. The load distribution is assumed to be as shown in Figure 14.3.

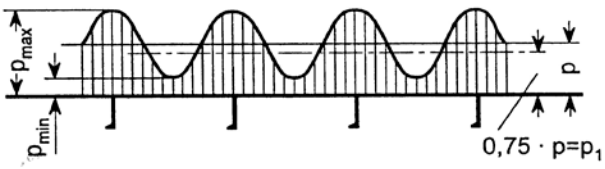

Figure 14.3 Ice load distribution

As a conclusion, maximum pressures (P_{max}) occur at the frames and minimum pressures occur between frames.

Due to the finite height of the design ice load, h (see Table 14.4), the ice load distribution shown in Figure 14.3 is not applicable for longitudinally-framed plating.

The formulae for determining the scantlings used in this Section are based on the following design loads:

$p = 0.5 \cdot (p_{max} + p_{min})\ [N/mm^2]$	for frames and longitudinally-framed shell plating
$p_1 = 0.75 \cdot p\ [N/mm^2]$	for transversely-framed shell plating

p = design ice pressure according to D.2.2.2

2.1.2 The formulae and values given in this Section may be substituted by direct calculation methods if they are deemed by **TL** to be invalid or inapplicable for a given structural arrangement or detail.

Otherwise, direct analysis is not to be utilized as an alternative to the analytical procedures prescribed by the explicit requirements in D.3 (shell plating) and D.4 (frames, ice stringers, web frames).

Direct analyses are to be carried out using the load patch defined in D.2.2 (p, h and ℓ_a). The pressure to be used is 1.8 p where p is determined according to D.2.2.2. The load patch is to be applied at locations where the capacity of the structure under the combined effects of bending and shear are minimized. In particular, the structure is to be checked with the load centered on the UIWL, 0.5 · h_0 below the LIWL, and several vertical locations in between. Several horizontal locations are also to be checked, especially the locations centered at the mid-span or mid-spacing. Further, if the load length ℓ_a cannot be determined directly from the arrangement of the structure, several values of ℓ_a are to be checked using corresponding values for c_a.

The acceptance criterion for designs is that the combined stresses from bending and shear, using the von Mises yield criterion, are lower than the yield strength ReH. When the direct calculation is performed using beam theory, the allowable shear stress is not to be greater than $0.9\tau_y$, where $\tau_y = R_{eH} / 3$.

2.1.3 If scantlings derived from the requirements of this section are less than those required for an unstrengthened ship, the latter are to be used.

2.2 Ice Loads

2.2.1 Height of the ice load area

An ice strengthened ship is assumed to operate in open sea conditions corresponding to a level ice thickness not exceeding h_0. The design height h of the area actually under ice pressure at any particular point of time is, however, assumed to be only a fraction of the ice thickness. The values for h_0 and h are given in Table 14.4.

Table 14.4 Ice thickness and height of load area

Ice class notation	h_0 [m]	h [m]
ICE-B4	1.0	0.35
ICE-B3	0.8	0.30
ICE-B2	0.6	0.25
ICE-B1	0.4	0.22
ICE-B	0.4	0.22

2.2.2 Design ice pressure

The design ice pressure is to be determined according to the following formula:

$p = c_d \cdot c_1 \cdot c_a \cdot p_0$ [N/mm^2]

c_d = Factor which takes account of the influence of the size and engine output of the ship. This factor is taken as maximum c_d = 1. It is calculated by the formula:

$$= \frac{a \cdot k + b}{1000}$$

$$k = \frac{\sqrt{D \cdot P}}{1000}$$

a, b = Coefficients in accordance with Table 14.5

D = Displacement [t] of the ship as defined in B.2.3

Table 14.5 Coefficients a and b

	Region			
	Bow		Midbody & Stern	
	k ≤ 12	k > 12	k ≤ 12	k > 12
a	30	6	8	2
b	230	518	214	286

P = Total maximum output [kW] the propulsion machinery can continuously deliver to the propeller(s), see also C.2. In case of ice class notation ICE-B the maximum output need not to be taken greater than 740 kW.

c_1 = A factor which takes account of the probability that the design ice pressure occurs in a certain region of the hull for the ice class in question. The value of c_1 is given in the Table 14.6

Table 14.6 Coefficient c_1

Ice class	Region		
	Bow	Midbody	Stern
ICE-B4	1.0	1.0	0.75
ICE-B3	1.0	0.85	0.65
ICE-B2	1.0	0.70	0.45
ICE-B1	1.0	0.50	0.25
ICE-B	0.3	-	-

c_a = A factor which takes account of the probability that the full length of the area under consideration will be under pressure at the same time. It is calculated by the formula:

$$c_a = \sqrt{\frac{0.6}{\ell a}}$$ $c_{a,max}$ = 1.0; $c_{a,min}$ =0.35

ℓ_a = Effective length in [m] according to Table 14.7

Table 14.7 Effective length ℓ_a

Structure	Type of framing	ℓ_a [m]
Shell	Transverse	Frame spacing
	Longitudinal	1.7 x Frame spacing
Frames	Transverse	Frame spacing
	Longitudinal	Span of frame
Ice stringer		Span of stringer
Web frame		2 x Web frame spacing

p_0 = The nominal ice pressure; the value 5,6 [N/mm^2] is to be used.

3. Shell Plating

3.1 General

3.1.1 Where the draught is smaller than 1.5 m, e.g. in the ballast condition, or where the distance between the lower edge of the ice belt and the keel plate is smaller than 1.5 m, the thickness of the bottom plating in way of the bow region ice belt is not to be less than required for the ice belt. In the same area, the thickness of the plate floors is to be increased by 10 %.

3.1.2 Side scuttles are not to be situated in the ice belt. If the weather deck in any part of the ship is situated below the upper limit of the ice belt, see D.1.2 (e.g. in way of the well of a raised quarter decker), the bulwark is to have at least the same strength as is required for the shell in the ice belt. Special consideration has to be given to the design of the freeing ports.

3.1.3 For ships with the ice class notation ICE-B4, the forefoot region according to D.1.1.4 is to have at least the thickness of the midbody region.

3.1.4 For ships with the ice class notation ICE-B3 or ICE-B4, and with a speed v_0 ≥18 knots, the upper bow ice belt region according to D.1.1.4 is to have at least the thickness of the midbody region. A similar strengthening of the bow region is also advisable for a ship with a lower service speed when it is evident that the ship will have a high bow wave, e.g. on the basis of model tests.

3.2 Plate thickness in the ice belt

For transverse framing the thickness of the shell plating is to be determined by the formula:

$$t = 667 \cdot \mathbf{a} \cdot \sqrt{\frac{f_1 \cdot p_{PL}}{ReH}} + t_c \quad [mm]$$

For longitudinal framing the thickness of the shell plating is to be determined by the formula:

$$t = 667 \cdot \mathbf{a} \cdot \sqrt{\frac{p}{f_2 \cdot ReH}} + t_c \quad [mm]$$

p_{PL} = 0.75 p [N/mm^2]

$$f_1 = 1.3 - \frac{4{,}2}{(1.8 + h/\mathbf{a})^2}$$

f_{1max} = 1.0

$$f_2 = 0.6 + \frac{0.4}{h/\mathbf{a}} \quad \text{where } h/\mathbf{a} \le 1$$

$$f_2 = 1.4 - \frac{0.4\,h}{\mathbf{a}} \quad \text{where } 1 < h/\mathbf{a} \le 1.8$$

h = As given in Table 14.4

R_{eH} = Yield stress of the material [N/mm^2], for which the following values shall be used:

= 235 N/mm^2 for normal-strength hull structural steel

= 315 N/mm^2 or higher for high-strength hull structural steel

If steels with different yield stress are used, the actual values may be substituted for the above ones if accepted by TL.

t_c = Allowance for abrasion and corrosion [mm]. Normally t_c is to be 2 mm; if a special surface coating, by experience shown capable to withstand the abrasion of ice, is applied and maintained, lower values may be approved.

4. Frames

4.1 General

4.1.1 Within the ice strengthened area all frames are to be effectively attached to the supporting structures.

Longitudinal frames are generally to be attached to supporting web frames and bulkheads by brackets. Brackets may be omitted with an appropriate increase in the section modulus of the frame (see D.4.4) and with the addition of heel stiffeners (heel stiffeners may be omitted on the basis of direct calculations, subject to approval by TL).

When a transverse frame terminates at a stringer or deck, a bracket or similar construction is to be fitted. When a frame is running through the supporting structure, both sides of the web plate of the frame are to be connected to the structure by direct welding, collar plate or lug.

When installed, brackets and heel stiffeners are to have at least the same thickness as the web plate of the frame and the free edge has to be appropriately stiffened against buckling.

4.1.2 For the ice class notation **ICE-B4**, for the ice class notation **ICE-B3** within the bow and midbody regions, and for the ice class notations **ICE-B2** and **ICE-B1** in the bow region, the following applies:

4.1.2.1 Frames which are unsymmetrical, or having webs which are not perpendicular to the shell plating, or having an unsupported span ℓ greater than 4.0 m, are to be supported against tripping by brackets, intercostal plates, stringers or similar at a distance not exceeding 1300 mm.

If the span is less than 4.0 m, the supports against tripping are required for unsymmetrical profiles and stiffeners the web of which is not normal to plating in the following regions:

ICE-B4	All hull regions
ICE-B3	Bow and midbody regions
ICE-B2	Bow region
ICE-B1	Bow region

4.1.2.2 The frames are to be attached to the shell by double continuous welds. No scalloping is allowed except when crossing shell plate butt welds.

4.1.2.3 The web thickness t_w of the frames is to be at least the maximum of the following:

$$t_{W1} = h_W \cdot \frac{\sqrt{R_{eH}}}{C} \ [\mathrm{mm}]$$

h_W = web height [mm]

C = factor to take the section type into account:

C = 805 for profiles

C = 282 for flat bars

$$t_{W2} = 0.025 \cdot a \ [\mathrm{mm}]$$ For transverse frames

$$t_{W3} = 0.5 \cdot t_{shell} \ [\mathrm{mm}]$$

Note: For determining of t_{w3} the net thickness of the shell plating, $t - t_c$ shall be used.

$$t_{W4} = 9 \ [\mathrm{mm}]$$

Note: For the purpose of calculating the web thickness of frames, the yield strength ReH of the plating is not be taken greater than that of the framing. The minimum web thickness of 9 mm is independent of the yield strength R_{eH}.

4.1.2.4 Where there is a deck, tank top (or tank bottom), bulkhead, web frame or stringer in lieu of a frame, its plate thickness is to be in accordance with 4.1.2.3 above, to a depth corresponding to the height of adjacent frames. In the calculation of t_{w1}, h_w is to be taken as the height of adjacent frames and C is to be taken as 805.

4.1.3 For transverse framing above UIWL and below LIWL, as well as longitudinal framing below LIWL, the vertical extension of the ice-strengthened framing is to be determined according to Table 14.8 (Refer to 4.2).

Where the vertical extension of ice-strengthened transverse framing would extend beyond a deck or a tank top (or tank bottom) by not more than 250 mm, it may be terminated at that deck or tank top (or tank bottom).

4.2 Vertical Extension of Ice Strengthening

The vertical extension of the ice strengthening of the framing is to be at least as shown in the Table 14.8:

Table 14.8 Vertical extension of ice-strengthened framing

Ice class notation	Hull region	Above UIWL [m]	Below LIWL [m]
ICE-B4	Bow	1.2	Down to double bottom or below top of floors
	Midbody		2.0
	Stern		1.6
	Upper bow ice belt **(1)**	Up to top of ice belt	
ICE-B3, ICE-B2, ICE-B1	Bow		1.6
	Midbody		1.3
	Stern		1.0
	Upper bow ice belt **(1)**		
ICE-B		1.0	1.0

(1) *If required according to D.1.1.5*

Where the ice strengthening would go beyond a deck or a tanktop (or tank bottom) by no more than 250 mm, it can be terminated at that deck or tanktop.

4.3 Transverse frames

4.3.1 Section modulus and Shear Area

The section modulus of a main, tweendeck or intermediate transverse frame is to be determined according to the following formula:

$$W = \frac{p \cdot \mathbf{a} \cdot h \cdot \ell \cdot 10^6}{m_t \cdot R_{eH}} \quad [cm^3]$$

And the effective shear area of a main, tweendeck or intermediate transverse frame is to be calculated from:

$$A = \frac{\sqrt{3} \cdot f_3 \cdot p \cdot h \cdot \mathbf{a} \cdot 10^4}{2 \cdot R_{eH}} \quad [cm^2]$$

Where

$$m_t = \frac{7 \cdot m_0}{7 - 5 \cdot \frac{h}{\ell}}$$

m_0 = Coefficient that takes the boundary conditions into account. This coefficient according to Table 14.9

Note: The boundary conditions referred to in Table 15.9 are those for the intermediate frames. Other boundary conditions for main frames and tweendeck frames are assumed to be covered by interaction between the frames. This influence is included in the m_0 values. The load centre of the ice load is taken at $\ell / 2$.

f_3 = This is a factor which takes into account the maximum shear force versus the load location and the shear stress distribution that is equal to 1.2

R_{eH} = Minimum nominal upper yield point for hull structural steel [N/mm^2]

Where less than 15% of the span ℓ, of the frame is situated within the ice- strengthening zone for frames as defined in 4.2, ordinary frame scantlings may be used.

Table 14.9 Boundary conditions for transverse frames

Boundary condition	m_o	Example
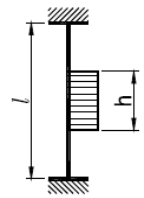	7	Frames in a bulk carrier with top wing tanks
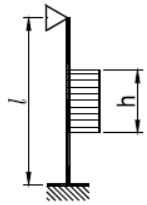	6	Frames extending from the tank top to a single deck
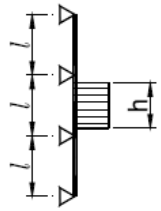	5.7	Continuous frames between several decks or stringers
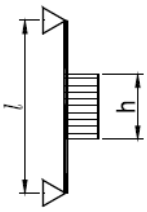	5	Frames extending between two decks only

4.3.2 Upper end of transverse framing

4.3.2.1 The upper end of the strengthened part of all frames is to be attached to a deck, tanktop (or tank bottom) or an ice stringer as per item 5.

4.3.2.2 Where a frame terminates above a deck or stringer which is situated at or above the upper limit of the ice belt, the part above the deck or stringer may have the scantlings required for an unstrengthened ship and the upper end of the intermediate frames may be connected to the adjacent frames by a horizontal member of the same scantlings as the main frame.

4.3.3 Lower end of transverse framing

4.3.3.1 The lower end of the strengthened part of all frames is to be attached to a deck, tanktop (or tank bottom) or an ice stringer as per item 5.

4.3.3.2 Where an intermediate frame terminates below a deck, tank top (or tank bottom) or ice stringer which is situated at or below the lower limit of the ice belt the lower end may be connected to the adjacent main frames by a horizontal member of the same scantlings as the frames. Note that the main frames below the lower edge of ice belt is to be ice strengthened, see item D.1.3.

4.4 Longitudinal frames

The section modulus W and the effective shear area A of longitudinal frames with all end conditions are to be determined according to the following formulae:

$$W = \frac{f_4 \cdot p \cdot h \cdot \ell^2 \cdot 10^6}{m \cdot R_{eH}} \quad [cm^3]$$

$$A = \frac{\sqrt{3} \cdot f_4 \cdot f_5 \cdot p \cdot h \cdot \ell \cdot 10^4}{2 \cdot R_{eH}} \quad [cm^2]$$

In calculating the actual shear area of the frames, the shear area of the brackets is not to be taken into account.

f_4 = 1 – 0.2 h/**a**, Factor which accounts for the distribution of load to adjacent frames

f_5 = 2.16 Factor which takes into account the maximum shear force versus load location and the shear stress distribution

m = Factor to take boundary conditions into account,

= 13,3 for a continuous beam with double end brackets

= 11.0 for a continuous beam without double end brackets.

Where, e.g. at the ends, the boundary conditions are considerable different from those of a continuous beam a smaller factor m may be taken.

R_{eH} = Yield stress as in D.3.2 [N/mm^2]

5. Ice Stringers

5.1 Ice stringers within the ice belt

The section modulus of a stringer situated within the ice belt is to be determined according to the following formula:

$$W = \frac{f_6 \cdot f_7 \cdot p \cdot h \cdot \ell^2 \cdot 10^6}{m \cdot R_{eH}} \quad [cm^3]$$

The effective shear area is to be:

$$A = \frac{\sqrt{3} \cdot f_6 \cdot f_7 \cdot f_8 \cdot p \cdot h \cdot \ell \cdot 10^4}{2 \cdot R_{eH}} \quad [cm^2]$$

The product of p · h in section modulus and shear area formulae above is not to be taken as less than 0.15.

m = Boundary condition factor as defined in 4.4.

f_6 = Factor which takes account of the distribution of load to the transverse frames; to be taken as 0.9

f_7 = Safety factor of stringers; to be taken as 1.8

f_8 = Factor that takes into account the maximum shear force versus load location and the shear stress distribution; to be taken as 1.2

R_{eH} = Yield stress as in D.3.2 [N/mm^2]

5.2 Ice stringers outside the ice belt

The section modulus of a stringer situated outside the ice belt but supporting ice-strengthened frames are to be calculated according to the following formula:

$$W = \frac{f_9 \cdot f_{10} \cdot p \cdot h \cdot \ell^2 \cdot 10^6}{m \cdot R_{eH}} \cdot \left(1 - \frac{h_s}{\ell_s}\right) \quad [cm^3]$$

The effective shear area is to be:

$$A = \frac{\sqrt{3} \cdot f_9 \cdot f_{10} \cdot f_{11} \cdot p \cdot h \cdot \ell \cdot 10^4}{2 \cdot R_{eH}} \cdot \left(1 - \frac{h_s}{\ell_s}\right) \quad [cm^2]$$

The product of p · h in section modulus and shear area formulae above is not to be taken as less than 0.15.

m = Boundary condition factor as defined in 4.4.

ℓ_s = The distance to the adjacent ice stringer, deck or similar structure [m]

h_s = The distance of the stringer to the ice belt [m]

f_9 = Factor which takes account of the distribution of load to the transverse frames; to be taken as 0.80

f_{10} = Safety factor of stringers; to be taken as 1.8

f_{11} = Factor that takes into account the maximum shear force versus load location and the shear stress distribution; to be taken as 1.2

R_{eH} = Yield stress as in D.3.2 [N/mm^2]

5.3 Deck strips

Narrow deck strips abreast of hatches and serving as ice stringers are to comply with the section modulus and shear area requirements in 5.2 and 5.3 respectively. In the case of very long hatches the product p · h may be taken as less than 0.15 but in no case less than 0.10.

Regard is to be paid to the deflection of the ship's sides due to ice pressure in way of very long (more than B/2) hatch openings when designing weather deck hatch covers and their fittings.

6. Web Frames

6.1 Ice Load

The ice load transferred to a web frame from an ice stringer or from longitudinal framing is to be calculated according to the following formula:

$$P = f_{12} \cdot p \cdot h \cdot e \cdot 10^3 \ \ [\mathrm{kN}]$$

p = Ice pressure as given in 2.2.2 [N/mm^2], in calculating C_a however, ℓ_a is to be taken as 2e.

The product p · h is not to be taken less than 0.15.

e = Web frame spacing in [m].

f_{12} = Safety factor of web frame; to be taken as 1.8

In case the supported stringer is outside the ice belt, the load P is to be multiplied by

$$\left(1 - \frac{h_s}{\ell_s}\right)$$

where, h_s and ℓ_s shall taken as defined in 5.2.

6.2 Section modulus and shear area

The section modulus and shear area of web frames shall be calculated by the formulae:

The effective shear area:

$$A = \frac{\sqrt{3} \cdot \alpha \cdot f_{13} \cdot Q \cdot 10^4}{R_{eH}} \ [\mathrm{cm}^2]$$

Where

Q = Maximum calculated shear force under the ice load P, as given in 6.1 (Q=P)

f_{13} = Factor that takes into account the shear force distribution; to be taken as 1.1

α = Coefficient given on Table 14.10

R_{eH} = Yield stress as in D.3.2 [N/mm^2]

Section modulus:

$$W = \frac{M}{R_{eH}} \cdot \sqrt{\frac{1}{1 - \left(\gamma \cdot \frac{A}{A_a}\right)^2}} \cdot 10^6 \ \ [\mathrm{cm}^3]$$

M = Maximum calculated bending moment [kNm] under the ice load P (as calculated according to 6.1); this is to be taken as M = 0.193Pℓ.

γ = Coefficient according to Table 14.10

A = Required shear area

A_a = Actual cross sectional area of the web frame,

A_a = $A_f + A_w$

Factors α and γ can be obtained from the table below

Table 14.10 Coefficient α and γ for the calculation of required shear area and section modulus

A_f/A_w	0.00	0.20	0.40	0.60	0.80	1.00	1.20	1.40	1.60	1.80	2.00
α	1.50	1.23	1.16	1.11	1.09	1.07	1.06	1.05	1.05	1.04	1.04
γ	0.00	0.44	0.62	0.71	0.76	0.80	0.83	0.85	0.87	0.88	0.89

A_f = Cross sectional area of free flange
A_w = Cross sectional area of web plate

7. Stem

The stem is to be made of rolled, cast or forged steel or of shaped steel plates (refer to Figure 14.4).

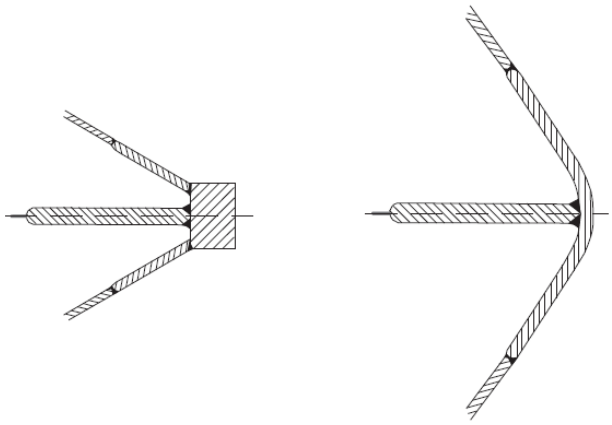

Figure 14.4 Examples of Suitable Stems

The plate thickness of a shaped plate stem and in the case of a blunt bow, any part of the shell where α ≥ 30° and ψ ≥ 75° (see C.2 for angle definitions), shall be calculated according to the formula in D.3.2 assuming that:

a = Spacing of elements supporting the plate [m]

p_{PL} = p [MPa] (see D.3.2)

ℓ_a = Spacing of vertical supporting elements [m] (see Table 14.7)

The stem and the part of a blunt bow defined above are to be supported by floors or brackets spaced not more than 0.6 m apart and having a thickness of at least half the plate thickness. The reinforcement of the stem shall extend from the keel to a point 0.75 m above UIWL or, in case an upper bow ice belt is required (D.1.1.5), to the upper limit of this.

8. Stern

8.1 The introduction of new propulsion arrangements with azimuthing thrusters or “podded” propellers, which provide an improved manoeuvrability, will result in increased ice loading of the Stern region and the stern area. This fact is to be considered in the design of the aft/stern structure.

8.2 In order to avoid very high loads on propeller blade tips, the minimum distance between propeller(s) and hull (including stern frame) should not be less than h_0 (see D.2.2.1).

8.3 On twin and triple screw ships the ice strengthening of the shell and framing is to be extended to the double bottom for 1,5 m forward and aft of the side propellers.

8.4 Shafting and stern tubes of side propellers are normally to be enclosed within plated bossings. If detached struts are used, their design, strength and attachment to the hull are to be duly considered.

9. Rudder and Steering Gear Arrangements

9.1 The scantlings of rudder post, rudder stock, pintles, steering engine, etc. as well as the capability of the steering engine are to be determined according to the requirements for main class. The maximum service speed of the ship to be used in these calculations is not to be taken as less than stated below:

ICE-B4	20 knots
ICE-B3	18 knots
ICE-B2	16 knots
ICE-B1	14 knots

If the actual maximum service speed of the ship is higher, that speed is to be used.

9.2 Independent of rudder profile the coefficient K_2 according to Section 18, B.1 need not be taken greater than K_2 = 1.1 in connection with the speed values given in item 9.1.

The factor K_3 according to Section 18, B.1 need not be taken greater than 1.0 for rudders situated behind a nozzle.

9.3 The local scantlings of rudders are to be determined assuming that the whole rudder belongs to the ice belt (according to D.1.1). Further, the rudder plating and frames are to be designed using the ice pressure p for the plating and frames in the midbody region (refer to item D.2.2.2).

9.4 For ice classes ICE-B4 and ICE-B3, the rudder (rudder stock and the upper part of the rudder) is to be protected from direct contact with intact ice by an ice knife that extends below the LIWL, if practicable (or equivalent means). Special consideration shall be given to the design of the rudder and the ice knife for ships with flap-type rudders.

9.5 For ice classes ICE-B4 and ICE-B3, due regard is to be paid to the large loads that arise when the rudder is forced out of the midship position while going astern in ice or into ice ridges. Suitable arrangement such as rudder stoppers shall be installed to absorb these loads.

9.6 Relief valves for hydraulic pressure in rudder turning mechanism(s) shall be installed. The components of the steering gear (e.g. rudder stock, rudder coupling, rudder horn etc.) shall be dimensioned to withstand loads causing yield stresses in the rudder stock.

Note: *For ships sailing in low temperature areas, small gaps between the rudder and ship's hull may cause the rudder to become fixed to the hull through freezing. It is therefore recommended to avoid gaps less than 1 / 20 of the rudder body width or 50 mm, whichever is less, or to install suitable means such as heating arrangements.*

10. Ice-Strengthening of Lateral Thruster Grids

10.1 As navigating within icy covered waters, ice-strengthening of lateral thruster grids shall be required. Refer also to **TL** Rules Chapter 4 Machinery Section 19 for Machinery for ICE Class Notation.

Lateral thruster tunnels are generally to be situated outside the icebelt defined in D.1.1 by the bow, midbody, and stern regions (for ICE-B4 also forefoot region). Positioning of any portion of the grid within the icebelt shall be subject to consideration of **TL** due to its encountering loads arising from intact ice.

Grids installed at the inlets of such tunnels may be subjected to loads arising from broken ice and are to be designed according to 10.2 and 10.3 below.

10.2 For a grid of standard construction, intercostal bars are to be fitted perpendicular to continuous bars (see Fig. 14.5). Continuous and intercostal bars are to be evenly spaced not more than $s_{c,max} = s_{i,max}$ = 500 mm (minimum 2 x 2 bars).

The grid is not to protrude outside the surface of the hull (i.e. surface of the hull and grid bars shall be flush) and it is recommended to align continuous bars with the buttock lines at the leading edge of the thruster tunnel (see Fig. 14.5).

Grids of non-standard construction are to have an equivalent strength to that of the standard configuration described in 10.3.

10.3 The section modulus W_c of continuous bars, is not to be less than determined by the following formula:

$$W_C = \frac{s_c \cdot D^2}{4 \cdot R_{eH}} \cdot (1 - \kappa) \cdot 10^{-4} \ [cm^3]$$

$W_c \geq 35\ cm^3$

s_c = Spacing [mm] of continuous bars

D = Diameter [mm] of thruster tunnel

K = Coefficient, defined as (not to be taken greater 0.5):

$$\kappa = 0.4 \cdot \frac{I_i}{I_c} \cdot \frac{s_c}{s_i}$$

I_i/I_c = Ratio of moments of inertia of intercostal and continuous bars

s_c/s_i = Ratio of spacings of continuous and intercostal bars

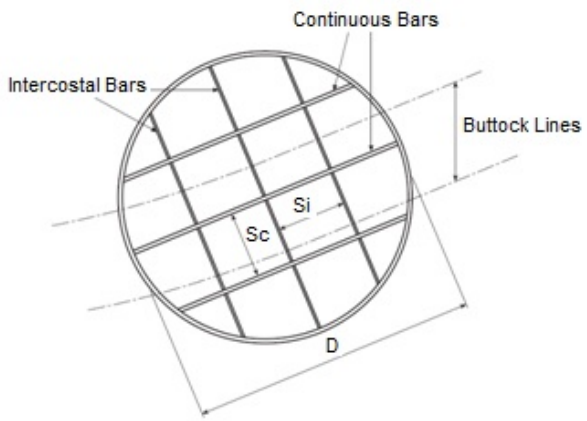

Figure 14.5 Standard construction of lateral thruster grid

E. Ice Strengthening for Class Notation ICE-B

Requirements in this section for class notation ICE-B are intended for light and very light localised drift ice in mouths of rivers and coastal areas.

1. Shell Plating

1.1 Within the ice belt the shell plating must have a strengthened strake extending over the forward region the thickness of which is to be determined according to D.3.2.

1.2 The midship thickness of the side shell plating is to be maintained forward of amidships up to the strengthened plating.

2. Frames

2.1 In the bow region the section modulus of the frames is to comply with the requirements given in D.4.

2.2 Tripping brackets spaces not more than 1,3 m apart are to be fitted within the ice belt in line with the tiers of beams and stringers in order to prevent tripping of the frames. The tripping brackets are to be extended over the bow region

3. Stem

The thickness of welded plate stems up to 600 mm above **UIWL** is to be 1,1 times the thickness required according to Section 9 C.2, however, need not exceed 25 mm. The thickness above a point 600 mm above the **UIWL** may be gradually reduced to the thickness required according to Section 9 C.2.

SECTION 15

HATCHWAYS

A. General

1. Application

1.1 Special requirements of National Administrations regarding hatchways, hatch covers, tightening and securing arrangements are to be observed.

1.2 The strength requirements are applicable to hatch covers and hatch coamings of stiffened plate construction and its closing arrangements.

1.3 This section is applicable to hatch covers and coamings made of steel. In case of alternative materials and innovative designs the approval is subject to the TL.

1.4 This section does not apply to portable covers secured weathertight by tarpaulins and battening devices, or pontoon covers, as defined in ICLL Regulation 15.

2. Hatchways on Freeboard and Superstructure Decks

2.1 The hatchways are classified according to their position as defined in Section 1, H.6.7.

2.2 Hatchways are to have coamings, the minimum height of which above the deck is to be as follows:

- In position 1: 600 mm
- In position 2: 450 mm

2.3 Hatchways for ships engaged in sheltered water service (assigned with the notations **K6, L1** and **L2**)

2.3.1 The height h above deck of hatchway coamings is not to be less than:

h = 600 mm on decks in Position 1

h = 380 mm on decks in Position 2

2.3.2 The thickness t of coamings is to be determined by the following formulae:

$t = 4.5+\frac{\ell}{6}$ [mm] for longitudinal coamings

$t = 2.75+\frac{b}{2}$ [mm] for transverse coamings

ℓ = length [m] of hatchway

b = breadth [m] of hatchway

2.3.3 For hatch covers the requirements of Section 15,C, Section 16,G, and Section 15, D apply.

2.4 A deviation from the requirements under 1.2 may only be granted for hatchways on exposed decks which are closed by weathertight, self tightening steel covers. The respective exemption, in accordance with ICLL Regulation 14-1, has to be applied for in advance from the competent flag state authority.

2.5 Where an increased freeboard is assigned, the height of hatchway coamings according to 1.2 on the actual freeboard deck may be as required for a superstructure deck, provided the summer freeboard is such that the resulting draught will not be greater than that corresponding to the minimum freeboard calculated from an assumed freeboard deck situated at a distance equal to a standard superstructure height below the actual freeboard deck.

2.6 For corrosion protection of hatch coamings and hatch covers of bulk carriers, ore carriers and combination carriers, see Section 22, A.10.

2.7 For hatch covers on freeboard and superstructure decks the application of steel with R_{eH} > 355 N/mm^2 is to be agreed with **TL**.

3. Hatchways on Lower Decks and Within Superstructures

3.1 Coamings are not required for hatchways below the freeboard deck or within weathertight closed superstructures unless they are required for strength purposes.

3.2 For hatch covers on lower decks and within superstructures the application of steel with R_{eH} > 355 N/mm^2 is to be agreed with **TL**.

4. Definitions

Single skin cover

A hatch cover made of steel or equivalent material that is designed to comply with ICLL Regulation 16. The cover has continuous top and side plating, but is open underneath with the stiffening structure exposed. The cover is weathertight and fitted with gaskets and clamping devices unless such fittings are specifically excluded.

Double skin cover

A hatch cover as above but with continuous bottom plating such that all the stiffening structure and internals are protected from the environment.

Pontoon type cover

A special type of portable cover, secured weathertight by tarpaulins and battening devices. Such covers are to be designed in accordance with ICLL Regulation 15 and are not covered by this Section.

Note:
Modern hatch cover designs of lift-away-covers are in many cases called pontoon covers. This definition does not fit to the definition above. Modern lift-away hatch cover designs should belong to one of the two categories single skin covers or double skin cover.

p = Design load [kN/m^2] for hatch covers of respective load cases A to D according to B.

= P_H for vertical loading on hatch covers

= P_A for horizontal loading on edge girders (skirt plates) of hatch covers and on coamings according to Section 13, C.2.

= Liquid pressure P_T

= P_{SC} + P_{DC} for cargo loads on hatch covers according to Section 5, C.4.1 and Section 5, D.6.1.

P_T = P_{ST} + P_{DT}
= P_{T1} , P_{T2} , P_{T3} , P_{T4} , P_{T5}

the greatest value is to be used.

P_T = Design tank pressure load [kN/m^2] according to Section 5, C.3 and Section 5, D.8

x = Distance of midpoint of the assessed hatch cover from aft end of length L or L_c, as applicable

h_N = Superstructure standard height according to ICLL

= 1,05 + 0,01 L_c [m]; 1,8 ≤ h_N ≤ 2,3

D_{min} = The least moulded depth, in m, as defined in ICLL Regulation 3

l = Unsupported span [m] of stiffener, to be taken as the spacing of main girders or the distance between a main girder and the edge support for hatch covers and as the spacing of coaming stays for hatch coamings, as applicable

a = Spacing of stiffeners [m]

t = Thickness of structural member [mm]

= t_{net} + t_K

t_{net} = Net thickness [mm]

t_K = Corrosion addition acc. to 4.1, Table 15.1

5. Corrosion Additions and Steel Renewal

5.1 For the scantlings of hatch covers and coamings additions t_K given by Table 15.1 are to be applied.

5.2 For the steel renewal of hatch covers and coamings **TL** Classification and Surveys Rules, Section 3, item J.4.3 are to be applied.

Table 15.1 Corrosion additions for hatch coamings and hatch covers

Application	Structure	t_K [mm]
Weather deck hatches of container ships, car carriers, paper carriers, passenger vessels	Hatch covers	1,0
	Hatch coamings	according to Section 3, B.9
Weather deck hatches of all other ship types (e.g. multi-purpose dry cargo ships)	Hatch covers in general:	2,0
	Weather exposed plating and bottom plating of double skin hatch covers	1,5 (2,0)
	Internal structure of double skin hatch covers and closed box girders	1,0 (1,5)
	Hatch coamings not part of the longitudinal hull structure	1,5
	Hatch coamings part of the longitudinal hull structure	according to Section 3, B.9
	Coaming stays and stiffeners	1,5
Hatches within enclosed spaces	Hatch covers:	
	- Top plating	1,2
	- Remaining structures	1,0
	Hatch coamings	according to Section 3, B.9 to B.9.3

(1) *The t_K values for load cases B, C and E, respectively are to be indicated in the drawings.*
(2) *The t_K values in brackets are to be applied to bulk carriers according to the definition of IACS Common structural Rules.*

B. Hatch Covers

1. General Requirements

1.1 Structural Arrangement

1.1.1 Primary supporting members and secondary stiffeners of hatch covers are to be continuous over the breadth and length of hatch covers, as far as practical. When this is impractical, sniped end connections are not to be used and appropriate arrangements are to be adopted to provide sufficient load carrying capacity.

1.1.2 The spacing of primary supporting members parallel to the direction of secondary stiffeners is not to exceed 1/3 of the span of primary supporting members. When strength calculation is carried out by FE analysis according to 4.4, this requirement can be waived.

1.1.3 Secondary stiffeners of hatch coamings are to be continuous over the breadth and length of hatch coamings.

1.2 Material

1.2.1 Hatch covers and coamings are to be made of material in accordance with the definitions of Section 3.

1.2.2 Material class I is to be applied for top plate, bottom plate and primary supporting members.

2. Design Loads

Structural assessment of hatch covers and hatch coamings is to be carried out according to the following design loads:

2.1 Load case A:

2.1.1 The vertical design load P_H for weather deck hatch covers is to be taken from Table 15.2. Refer to Figure 15.1 and Section 1 H.6.7 for definitions of Position 1 and 2.

2.1.2 In general, the vertical design load P_H needs not to be combined with load cases B and C according to 2.2 and 2.3.

2.1.3 Where an increased freeboard is assigned, the design load for hatch covers according to Table 15.2 on the actual freeboard deck may be as required for a superstructure deck, provided the summer freeboard is such that the resulting draught will not be greater than that corresponding to the minimum freeboard calculated from an assumed freeboard deck situated at a distance equal to a standard superstructure height h_N below the actual freeboard deck, refer to Figure 15.2.

2.1.4 The vertical design load PH shall in no case be less than the deck design load p_{WD} according to Section 5, D.4. Instead of the deck height z the height of hatch cover plating above baseline is then to be inserted.

2.1.5 The horizontal design load PA for the outer edge girders (skirt plates) of weather deck hatch covers and of hatch coamings is to be determined analogously as for superstructure walls in the respective position according to Section 13, C.2.

Note:
The horizontal weatherl design load need not be included in the direct strength calculation of the hatch cover, unless it is utilized for the design of substructures of horizontal support according to B.5.7.

For bulk carriers according to Section 27 the horizontal load shall not be less than:

p_{Amin} = 175 kN/m^2 in general for outer edge girders of hatch covers

= 220 kN/m^2 in general for hatch coamings

= 230 kN/m^2 for the forward edge girder of the hatch 1 cover, if no forecastle according to Section 27, D. is arranged.

= 290 kN/m^2 for the forward transverse coaming of hatch 1, if no forecastle according to Section 27, D. is arranged.

2.2 Load case B:

Where cargo is intended to be carried on hatch covers they are to be designed for the loads as given in Section 5, D.6.and C.4.1 (P_{DC}+P_{SC})

If cargo with low stowage height is carried on weather deck hatch covers Section 5, D.4.2 is to be observed.

2.3 Load case C:

2.3.1 Container loads applied on hatch cover resulting from heave and pitch

The load P [kN] applied at each corner of a container stack, and resulting from heave and pitch (i.e. ship in upright condition) is to be determined as follows:

$$P = 9{,}81 \cdot \frac{M}{4} \cdot (1 + a_v)$$

a_v = acceleration addition according to Section 5.B.2

M = Maximum designed mass of container stack in t

2.3.2 Container loads applied on hatch cover resulting from heave, pitch and rolling

The loads [kN] applied at each corner of a container stack, and resulting from heave, pitch, and the ship's rolling motion (i.e. ship in heel condition) are to be determined as follows (see also Figure 15.3):

$$A_Z = 9{,}81 \cdot \frac{M}{2}(1 + a_V)\left[0{,}45 - 0{,}42\frac{h_m}{b}\right] \quad [kN]$$

$$B_Z = 9{,}81 \cdot \frac{M}{2}(1 + a_V)\left[0{,}45 + 0{,}42\frac{h_m}{b}\right] \quad [kN]$$

$B_y = 2{,}4 \cdot M$ [kN]

Table 15.2 Design load of weather deck hatches

Position	Design load p_H [kN / m^2]	
	$\frac{x}{\mathbf{L_c}} \leq 0{,}75$	$0{,}75 < \frac{x}{\mathbf{L_c}} \leq 1{,}0$
1	for 24 m ≤ $\mathbf{L_c}$ ≤100 m	
	$P_H = \frac{9{,}81}{76} \cdot (1{,}5 \cdot \mathbf{L_c} + 116)$	On freeboard deck; $P_H = \frac{9{,}81}{76} \cdot \left[(4{,}28 \cdot \mathbf{L_c} + 28) \cdot \frac{x}{\mathbf{L_c}} - 1{,}71 \cdot \mathbf{L_c} + 95\right]$
		Upon exposed superstructure decks located at least one superstructure standard height h_N above the freeboard deck; $P_H = \frac{9{,}81}{76} \cdot (1{,}5 \cdot \mathbf{L_c} + 116)$
	for $\mathbf{L_c}$ >100 m	
	$P_H = 9{,}81 \cdot 3{,}5$	On freeboard deck for type B ships according to **ICLL**; **(1)** $P_H = 9{,}81 \cdot \left[(0{,}0296 \cdot L_1 + 3{,}04) \cdot \frac{x}{\mathbf{L_c}} - 0{,}0222 \cdot L_1 + 1{,}22\right]$
		On freeboard deck for ships with less freeboard than type B according to **ICLL**; **(1)** $P_H = 9{,}81 \cdot \left[(0{,}1452 \cdot L_1 - 8{,}52) \cdot \frac{x}{\mathbf{L_c}} - 0{,}1089 \cdot L_1 + 9{,}89\right]$
		Upon exposed superstructure decks located at least one superstructure standard height h_N above the freeboard deck; $P_H = 9{,}81 \cdot 3{,}5$
2	for 24 m ≤ $\mathbf{L_c}$ ≤100 m	
	$P_H = \frac{9{,}81}{76} \cdot (1{,}1 \cdot \mathbf{L_c} + 87{,}6)$	
	for $\mathbf{L_c}$ >100 m	
	$P_H = 9{,}81 \cdot 2{,}6$	
	Upon exposed superstructure decks located at least one superstructure standard height h_N above the lowest Position 2 deck; $P_H = 9{,}81 \cdot 2{,}1$	

(1) *L_1 = $\mathbf{L_c}$ but not more than 340 m*

Where;

a_v = Acceleration addition according to Section 5.B.2

M = Maximum designed mass of container stack [t]

= $\sum W_i$

h_m = Designed height of centre of gravity of stack above hatch cover top [m] may be calculated as weighted mean value of the stack, where the centre of gravity of each tier is assumed to be located at the centre of each container,

z_i = Distance from hatch cover top to the centre of ith container in m

W_i = Weight of ith container in t

b = Distance between midpoints of foot points [m]

A_z, B_z, By = Support forces in y- and z-direction at the forward and aft stack corners.

When strength of the hatch cover structure is assessed by grillage analysis according to B.4, h_m and z_i need to be taken above the hatch cover supports. Forces By does not need to be considered in this case.

Values of A_Z, M and B_Z applied for the assessment of hatch cover strength are to be shown in the drawings of the hatch covers.

Note:
It is recommended that container loads as calculated above are considered as limit for foot point loads of container stacks in the calculations of cargo securing (container lashing).

2.3.3 Load cases with partial loading

The load cases B and C are also to be considered for partial loading which may occur in practice, e.g. where specified container stack places are empty. For each hatch cover, the heel directions, as shown in Table 15.3, are to be considered.

The load case partial loading of container hatch covers may be evaluated using a simplified approach, where the hatch cover is loaded without the outermost stacks that are located completely on the hatch cover. If there are additional stacks that are supported partially by the hatch cover and partially by container stanchions then the loads from these stacks are also to be neglected, refer to Table 15.3.

In addition, the case where only the stack places supported partially by the hatch cover and partially by container stanchions are left empty is to be assessed in order to consider the maximum loads in the vertical hatch cover supports.

It may be necessary to also consider partial load cases where more or different container stack places are left empty. Therefore, **TL** may require that additional partial load cases be considered.

2.3.4 Mixed stowage of 20' and 40' containers on hatch cover

In the case of mixed stowage (20'+40' container combined stack), the foot point forces at the fore and aft end of the hatch cover are not to be higher than resulting from the design stack weight for 40' containers, and the foot point forces at the middle of the cover are not to be higher than resulting from the design stack weight for 20' containers.
The design load for other cargo than containers subject to lifting forces is to be determined separately.

2.4 Load case D:

Hatch covers of hold spaces intended to be filled with liquids are to be designed for the loads specified in P_{ST} + P_{DT} according to Section 5 C.3.2.1 and Section 5 D.8.1.1 and D.8.2. irrespective of the filling height of hold spaces.

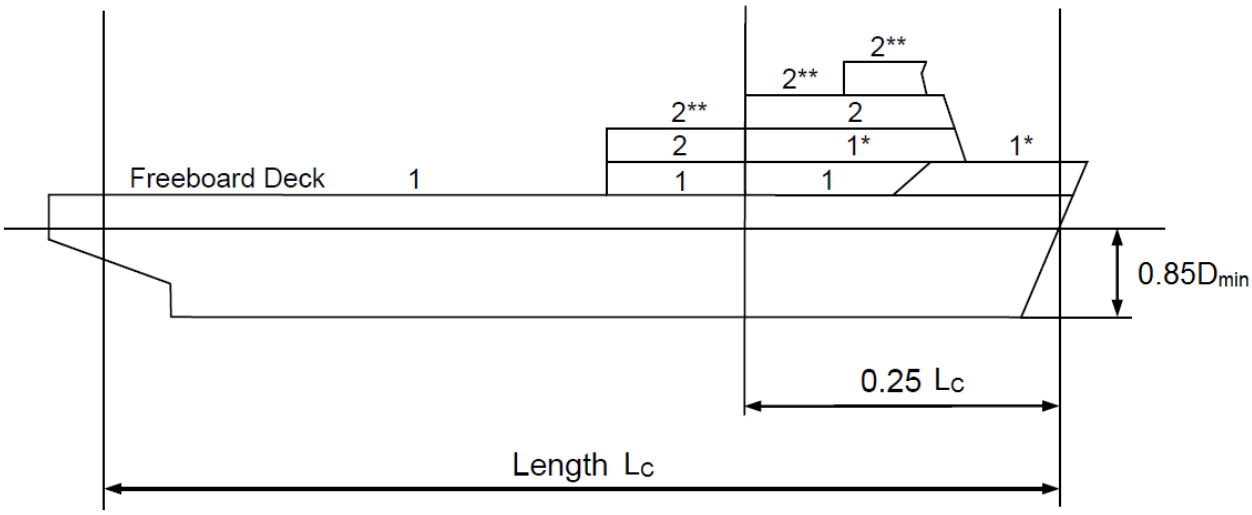

* Reduced load upon exposed superstructure decks located at least one superstructure standard height above the freeboard deck

** Reduced load upon exposed superstructure decks of vessels with L_c > 100 m located at least one superstructure standard height above the lowest Position 2 deck

Figure 15.1 Positions 1 and 2

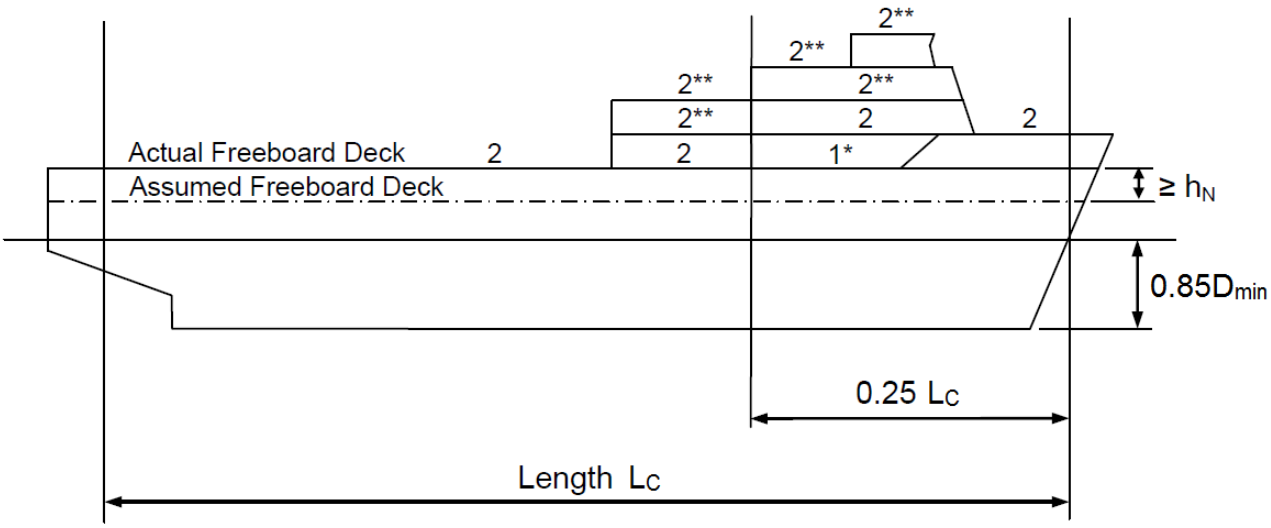

* Reduced load upon exposed superstructure decks located at least one superstructure standard height above the freeboard deck

** Reduced load upon exposed superstructure decks of vessels with L_c > 100 m located at least one superstructure standard height above the lowest Position 2 deck

Figure 15.2 Positions 1 and 2 for an increased freeboard

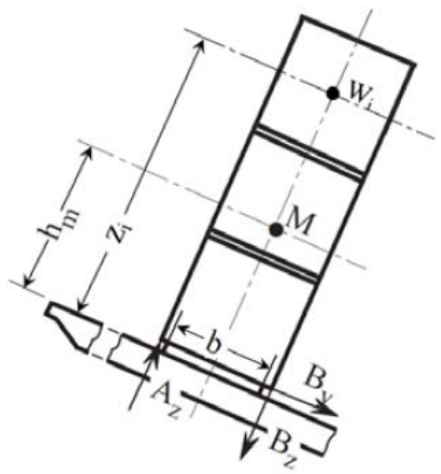

Figure 15.3 Forces due to load case C acting on hatch cover

2.5 Load case E:

Hatch covers, which in addition to the loads according to the above are loaded in the ship's transverse direction by forces due to elastic deformations of the ship's hull, are to be designed such that the sum of stresses does not exceed the permissible values given in 3.

2.6 Horizontal mass forces

For the design of hatch cover supports according to 5.7 the horizontal mass forces $F_h = m \cdot a$ are to be calculated with the following accelerations:

a_x = 0,2 · g in longitudinal direction

a_y = 0,5 · g in transverse direction

m = Sum of mass of cargo lashed on the hatch cover and of the hatch cover

The accelerations in longitudinal direction and in transverse direction do not need to be considered as acting simultaneously.

3. Permissible stresses and deflections

3.1 Permissible stresses

The equivalent stress σ_v in steel hatch cover structures related to the net thickness shall not exceed $0{,}8 \cdot R_eH$.

For load cases B to E according to 2, the equivalent stress σ_v related to the net thickness shall not exceed $0.9 \cdot R_{eH}$ when the stresses are assessed by means of FEM according to 4.4.

For steels with R_{eH} > 355 N/mm^2, the value of R_{eH} to be applied throughout this section is to be agreed with **TL** but is not to be more than the minimum yield strength of the material.

For grillage analysis, the equivalent stress may be taken as follows:

$$\sigma_V = \sqrt{\sigma^2 + 3\tau^2} \quad \left[\mathrm{N/mm^2}\right]$$

σ = $\sigma_b + \sigma_n$ [N/mm^2]

σ_b = Bending stress [N/mm^2]

σ_n = Normal stress [N/mm^2]

τ = Shear stress [N/mm^2]

For FEM calculations, the equivalent stress may be taken as follows:

$$\sigma_v = \sqrt{\sigma_x^2 - \sigma_x \cdot \sigma_y + \sigma_y^2 + 3\tau^2} \quad \left[\mathrm{N/mm^2}\right]$$

σ_x = Normal stress in x-direction [N/mm^2]

σ_y = Normal stress in y-direction [N/mm^2]

τ = Shear stress in the x-y plane [N/mm^2]

Indices x and y denominate axes of a two-dimensional cartesian coordinate system in the plane of the considered structural element.

In case of FEM calculations using shell or plane stress elements, the stresses are to be read from the centre of the individual element. It is to be observed that, in particular, at flanges of unsymmetrical girders, the evaluation of stress from element centre may lead to non-conservative results. Thus, a sufficiently fine mesh is to be applied in these cases or, the stress at the element edges shall not exceed the allowable stress. Where shell elements are used, the stresses are to be evaluated at the mid plane of the element.

Stress concentrations are to be assessed to the satisfaction of **TL**.

Table 15.3 Partial loading of container hatch covers

Heel direction	←	→
Hatch covers supported by the longitudinal hatch coaming with all container stacks located completely on the hatch cover	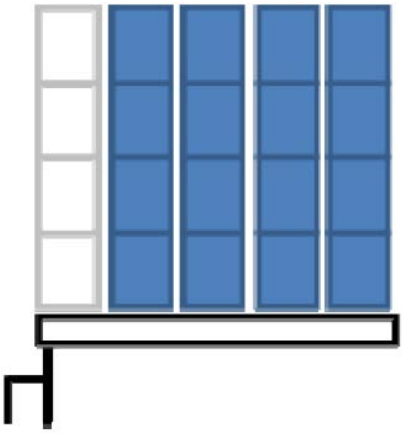	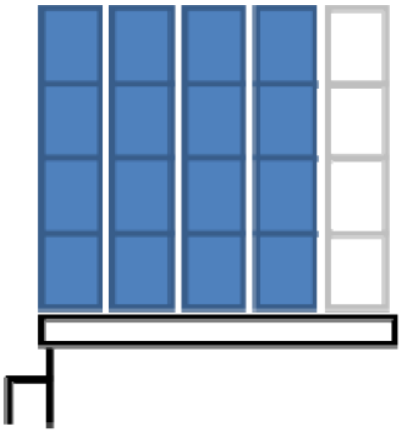
Hatch covers supported by the longitudinal hatch coaming with the outermost container stack supported partially by the hatch cover and partially by container stanchions	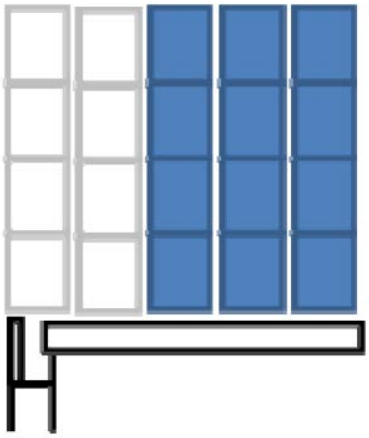	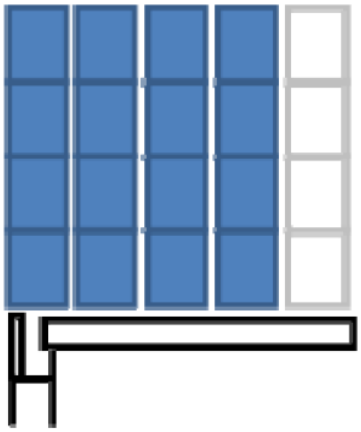
Hatch covers not supported by the longitudinal hatch coaming (center hatch covers)	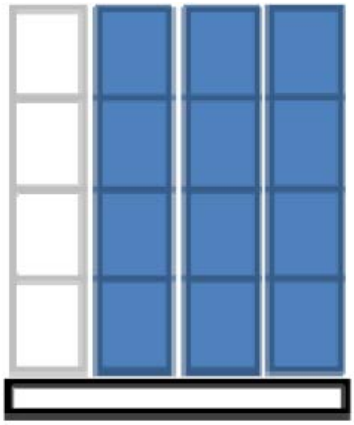	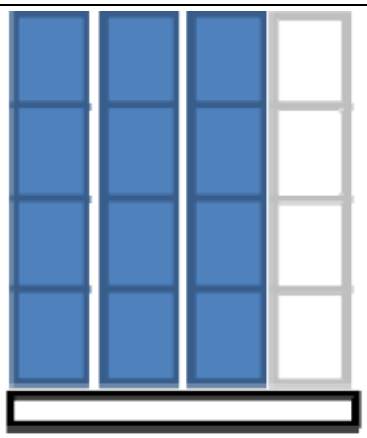

3.2 Permissible deflections

The deflection f of weather deck hatch covers under the vertical design load PH shall not exceed:

$$f = 0{,}0056\ \ell_g\ [m]$$

ℓ_g = largest span of girders [m]

Note:
Where hatch covers are arranged for carrying containers and mixed stowage is allowed, i.e. a 40' - container on stowages places for two 20' - containers, the deflections of hatch covers have to be particularly observed. Further the possible contact of deflected hatch covers with in hold cargo has to be observed.

3.3 Where hatch covers are made of aluminum alloys, Section 3, A.4. is to be observed. For permissible deflections 3.2 applies.

3.4 The permissible stresses specified under 3.1 apply to primary girders of symmetrical cross section. For unsymmetrical cross sections, e.g. sections, equivalence in regard to strength and safety is to be proved, see also Section 3, B.10.

4. Strength Calculation for Hatch Covers

4.1 General

4.1.1 Strength calculation for hatch covers may be carried out by either grillage analysis or FEM. Double skin hatch covers or hatch covers with box girders are to be assessed using FEM, refer to 4.4.

Calculations are to be based on net thickness

$$t_{net} = t - t_K$$

The t_K values used for calculation have to be indicated in the drawings.

4.1.2 Sufficient buckling strength is to be demonstrated for hatch cover structures. Verifications of buckling strength according to 4.5 are to be based on t = t_{net} and stresses corresponding to t_{net} applying the following safety factors:

S = 1,25 for hatch covers when subjected to the vertical design load p_H according to 2.1.

S = 1,1 for hatch covers when subjected to the horizontal design load p_A according to 2.1 as well as to load cases B to E according to 2.2. through 2.5.

For verification of buckling strength of plate panels stiffened with U-type stiffeners a correction factor F_1 = 1,3 may be applied.

4.1.3 For all structural components of hatch covers for spaces in which liquids are carried, the minimum thickness for tanks according to Section 12, B.2. is to be observed.

4.2 Hatch cover supports

Supports and stoppers of hatch covers are in general to be so arranged that no constraints due to hull deformations occur in the hatch cover structure and at stoppers respectively, see also load case E according to 2.5.

Deformations due to the design loads according to 2. between coaming and weathertight hatch covers, as well as between coaming and covers for hold spaces in which liquids are carried, shall not lead to leakiness, refer to 6.

For bulk carriers according to Section 27 force transmitting elements are to be fitted between the hatch cover panels with the purpose of restricting the relative vertical displacements. However, each panel has to be assumed as independently load-bearing.

If two or more deck panels are arranged on one hatch, clearances in force transmitting elements between panels have generally to be observed.

Stiffness of securing devices, where applicable, and clearances are to be considered.

4.3 Strength calculations for beam and girder grillages

Cross-sectional properties are to be determined considering the effective breadth according to Section 3, B.5.

Cross sectional areas of stiffeners parallel to the girder web within the effective breadth can be included, see 4.5.3.2.

Special calculations may be required for determining the effective breadth of one-sided or non-symmetrical flanges.

The effective cross sectional area of plates is not to be less than the cross sectional area of the face plate.

The effective width of flange plates under compression with stiffeners perpendicular to the girder web is to be determined according to 4.5.3.2.

In way of larger cutouts in girder webs it may be required to consider second order bending moments.

4.4 FEM calculations

For strength calculations of hatch covers by means of finite elements, the cover geometry shall be idealized as realistically as possible. Element size shall be appropriate to account for effective breadth. In no case element width shall be larger than stiffener spacing. In way of force transfer points, cutouts and one-sided or non-symmetrical flanges the mesh has to be refined where applicable. The ratio of element length to width shall not exceed 4.

The element height of girder webs shall not exceed one-third of the web height. Stiffeners, supporting plates against lateral loads, have to be included in the idealization. Stiffeners may be modeled by using shell elements, plane stress elements or beam elements. Buckling stiffeners may be disregarded for the stress calculation.

4.5 Buckling strength of hatch cover structures

For hatch cover structures sufficient buckling strength is to be demonstrated.

The buckling strength assessment of coaming parts is to be done according to Section 3, C.

Definitions

a = Length of the longer side of a single plate field in mm (x-direction)

b = Breadth of the shorter side of a single plate field in mm (y-direction)

σ = Aspect ratio of single plate field

= a / b

n = Number of single plate field breadths within the partial or total plate field

t = Net plate thickness in mm

σ_x = Membrane stress, in N/mm^2, in x-direction

σ_y = Membrane stress, in N/mm^2, in y-direction

τ = Shear stress, in N/mm^2, in the x-y plane

E = Modulus of elasticity, in N/mm^2, of the material

= $2{,}06 \cdot 10^5$ N/mm^2 for steel

σ_F = Minimum yield stress, in N/mm^2, of the material

Compressive and shear stresses are to be taken positive, tension stresses are to be taken negative.

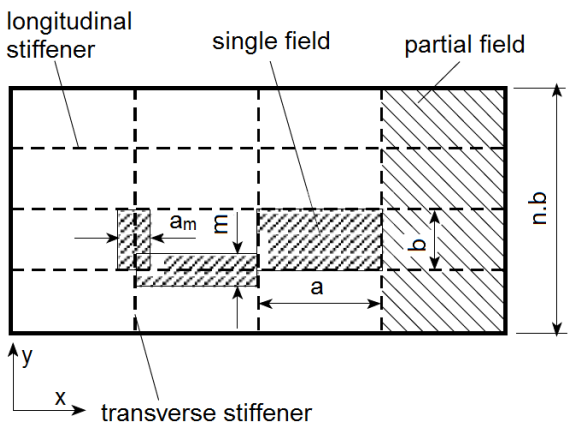

longitudinal: stiffener in the direction of the length a;
transverse: stiffener in the direction of the breadth b

Figure 15.4 General arrangement of panel

Note:

If stresses in the x- and y-direction already contain the Poisson-effect (calculated using FEM), the following modified stress values may be used. Both stresses σx and σy* are to be compressive stresses, in order to apply the stress reduction according to the following formulae:*

$\sigma_x = (\sigma^*_x - 0{,}3 \cdot \sigma^*_y) / 0{,}91$

$\sigma_y = (\sigma^*_y - 0{,}3 \cdot \sigma^*_x) / 0{,}91$

σ^*_x , σ^*_y = Stresses containing the Poisson-effect.

- Where compressive stress fulfils the condition; $\sigma^*_y < 0{,}3\ \sigma^*_x$, then; $\sigma_y = 0$ and $\sigma_x = \sigma^*_x$

- Where compressive stress fulfils the condition; $\sigma^*_x < 0{,}3 \cdot \sigma^*_y$, then; $\sigma_x = 0$ and $\sigma_y = \sigma^*_y$

F_1 = Correction factor for boundary condition at the longitudinal stiffeners according to Table 15.4.

σ_e = Reference stress, in N/mm^2, taken equal to

$$= 0.9 \cdot E \cdot \left(\frac{t}{b}\right)^2$$

Ψ = Edge stress ratio taken equal to

= σ_2 / σ_1 where

σ_1 = Maximum compressive stress

Table 15.4 Correction factor F_1

Stiffeners sniped at both ends	1,0	
Guidance values **(1)** where both ends are effectively connected to adjacent structures:	1,05 1,10 1,20 1,30	for flat bars for bulb sections for angle and tee-sections for u-type sections **(2)** and girders of high rigidity (e.g. bottom transverses)
An average value of F_1 is to be used for plate panels having different edge stiffeners		
1) *Exact values may be determined by direct calculations.* **2)** *Higher value may be taken if it is verified by a buckling strength check of the partial plate field using non-linear FEA and deemed appropriate by **TL** but not greater than 2.0.*		

σ_2 = Minimum compressive stress or tension stress

S = Safety factor (based on net scantling approach), taken equal to

= 1.25 for hatch covers when subjected to the vertical weather design load according to 2.1

= 1.10 for hatch covers when subjected to loads according to 2.2 to 2.5

λ = reference degree of slenderness, taken equal to:

$$= \sqrt{\frac{\sigma_F}{K \cdot \sigma_e}}$$

K = Buckling factor according to Table15.6.

4.5.1 Proof of top and lower hatch cover plating

Proof is to be provided that the following condition is complied with for the single plate field a · b:

$$\left(\frac{|\sigma_x| \cdot S}{\kappa_x \cdot \sigma_F}\right)^{e1} + \left(\frac{|\sigma_y| \cdot S}{\kappa_y \cdot \sigma_F}\right)^{e2} - B\left(\frac{\sigma_x \cdot \sigma_y \cdot S^2}{\sigma_F^2}\right) + \left(\frac{|\tau| \cdot S \cdot \sqrt{3}}{\kappa_\tau \cdot \sigma_F}\right)^{e3} \leq 1{,}0$$

The first two terms and the last term of the above condition shall not exceed 1,0.

The reduction factors κ_x, κ_y and κ_τ are given in Table 15.6.

Where $\sigma_x < 0$ (tension stress), $\kappa_x = 1{,}0$.

Where $\sigma_y < 0$ (tension stress), $\kappa_y = 1{,}0$.

The exponents e_1, e_2 and e_3 as well as the factor B are to be taken as given by Table 15.5.

Table 15.5 Coefficients e_1, e_2, e_3 and factor B

Exponents e_1 - e_3 and factor B	Plate field
e_1	$1+\kappa_x^4$
e_2	$1+\kappa_y^4$
e_3	$1+ \kappa_x \cdot \kappa_y \cdot \kappa_\tau^2$
B σ_x and σ_y positive (compression stress)	$(\kappa_x \cdot \kappa_y)^5$
B σ_x or σ_y negative (tension stress)	1

4.5.2 Webs and flanges of primary supporting members

For non-stiffened webs and flanges of primary supporting members sufficient buckling strength as for the hatch cover top and lower plating is to be demonstrated according to 4.5.1.

4.5.3 Proof of partial and total fields of hatch covers

4.5.3.1 Longitudinal and transverse secondary stiffeners

It is to be demonstrated that the continuous longitudinal and transverse stiffeners of partial and total plate fields comply with the conditions set out in 4.5.3.3 through 4.5.3.4.

For u-type stiffeners, the proof of torsional buckling strength according to 4.5.3.4 can be omitted.

Single-side welding is not permitted to use for secondary stiffeners except for u-stiffeners.

4.5.3.2 Effective width of top and lower hatch cover plating

For demonstration of buckling strength according to 4.5.3.3 through 4.5.3.4 the effective width of plating may be determined by the following formulae:

$b_m = \kappa_x \cdot b$ for longitudinal stiffeners

$a_m = \kappa_y \cdot a$ for transverse stiffeners

See also Figure 15.4.

The effective width of plating is not to be taken greater than the value obtained from 4.3.

The effective width e'm of stiffened flange plates of primary supporting members may be determined as follows:

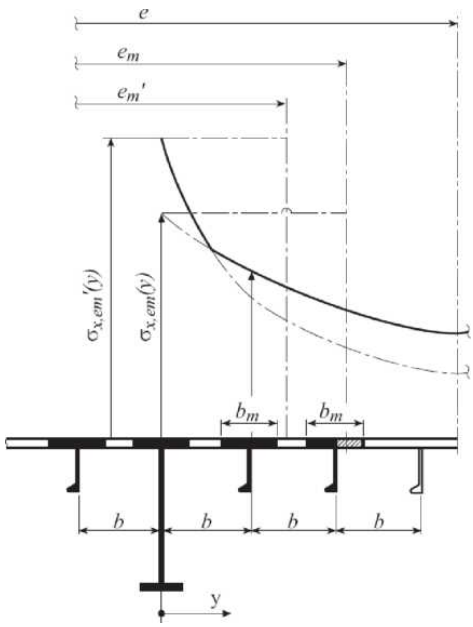

Figure 15.5 Stiffening parallel to web of primary supporting member

$b < e_m$

$e'_m = n \cdot b_m$

n = integer number of stiffener spacings b inside the effective breadth e_m according to 4.3

$$= \text{int}\left(\frac{e_m}{b}\right)$$

Table 15.6 Plane Plate Fields

Buckling - Load case		Edge stress ratio Ψ	Asp. ratio α = a/b	Buckling factor K	Reduction factor κ
1	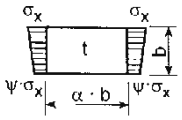	1≥Ψ ≥0	α ≥ 1	$K = \frac{8,4}{\Psi + 1,1}$	$\kappa_X = 1$ for $\lambda \le \lambda_C$ $\kappa_X = c\left(\frac{1}{\lambda} - \frac{0,22}{\lambda^2}\right)$ for $\lambda > \lambda_C$ c =(1,25-0,12 Ψ)≤ 12,5 $\lambda_c = \frac{c}{2}\left(1 + \sqrt{1 - \frac{0,88}{c}}\right)$
		0>Ψ>-1		$K = 7,63 - \Psi(6,26 - 10\Psi)$	
		Ψ ≤ -1		$K = (1 - \Psi)^2 \cdot 5,975$	
2	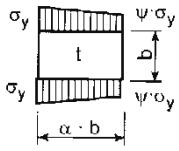	1≥Ψ≥0	α ≥ 1	$K = F_1\left(1 + \frac{1}{\alpha^2}\right)^2 \frac{2,1}{(\psi + 1,1)}$	$\kappa_y = c\left(\frac{1}{\lambda} - \frac{R + F^2(H - R)}{\lambda^2}\right)$ c=(1,25 - 0,12 Ψ)≤12,5 $R = \lambda\left(1 - \frac{\lambda}{c}\right)$ for $\lambda < \lambda_C$ R =0,22 for $\lambda \ge \lambda_C$ $\lambda_c = \frac{c}{2}\left(1 + \sqrt{1 - \frac{0,88}{c}}\right)$ $F = \left(1 - \frac{\frac{K}{0,91} - 1}{\lambda_p^2}\right) c_1 \ge 0$ $\lambda_p^2 = \lambda^2 - 0,5$ (for $1 \le \lambda_p^2 \le 3$) $c_1 = 0$ for σ_y due to direct loads $c_1 = 1 - \frac{F1}{\alpha} \ge 0$ for σ_y due to bending (in general) $c_1 = 0$ for σ_y due to bending in extreme load cases (e.g. w.t. bulkheads) $H = \lambda - \frac{2\lambda}{c \cdot (T + \sqrt{T^2 - 4})} \ge R$ $T = \lambda + \frac{14}{15\lambda} + \frac{1}{3}$
		0>Ψ>-1	1≤ α≤1,5	$K = F_1\left[\left(1 + \frac{1}{\alpha^2}\right)^2 \frac{2,1}{1,1}(1 + \Psi) - \frac{\Psi}{\alpha^2}(13,9 - 10\Psi)\right]$	
			α>1,5	$K = F_1\left[\left(1 + \frac{1}{\alpha^2}\right)^2 \frac{2,1}{1,1}(1 + \Psi) - \frac{\Psi}{\alpha^2}\left(5,87 + 1,87\,\alpha^2 + \frac{8,6}{\alpha^2} - 10\Psi\right)\right]$	
		Ψ ≤ -1	$1 \le \alpha \le (1 - \Psi)\frac{3}{4}$	$K = F_1\left(\frac{1 - \Psi}{\alpha}\right)^2 5,975$	
			$\alpha > (1 - \Psi)\cdot\left(\frac{3}{4}\right)$	$K = F_1\left[\left(\frac{1 - \Psi}{\alpha}\right)^2 3,9675 + 0,5375\left(\frac{1 - \Psi}{\alpha}\right)^4 + 1,87\right]$	
3	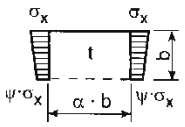	1≥Ψ≥ 0	α > 0	$K = \frac{4(0,425 + 1/\alpha^2)}{3\Psi + 1}$	$\kappa_x = 1$ for $\lambda \le 0,7$ $\kappa_x = \frac{1}{\lambda^2 + 0,51}$
		0>Ψ≥-1		$K = 4\left(0,425 + \frac{1}{\alpha^2}\right)(1 + \Psi) - 5 \cdot \Psi(1 - 3,42\,\Psi)$	

Table 15.6 Plane Plate Fields

Buckling - Load case		Edge stress ratio Ψ	Asp. ratio α = a/b	Buckling factor K	Reduction factor κ
4	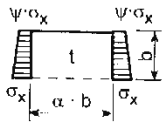	1≥Ψ≥-1	α > 0	$K = \left(0{,}425 + \frac{1}{\alpha^2}\right)\frac{3-\Psi}{2}$	for $\lambda > 0{,}7$
5	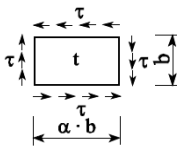	-		$K = K_\tau \cdot \sqrt{3}$	$\kappa_T = 1$ for $\lambda \leq 0{,}84$ $\kappa_\tau = \frac{0{,}84}{\lambda}$ for $\lambda > 0{,}84$
			α ≥ 1	$K_\tau = \left[5{,}34 + \frac{4}{\alpha^2}\right]$	
				$K_\tau = \left[4 + \frac{5{,}34}{\alpha^2}\right]$	
			0 < α < 1		
Explanations for boundary conditions :				- - - - - - - - - - *plate edge free* ———————— *plate edge simply supported*	

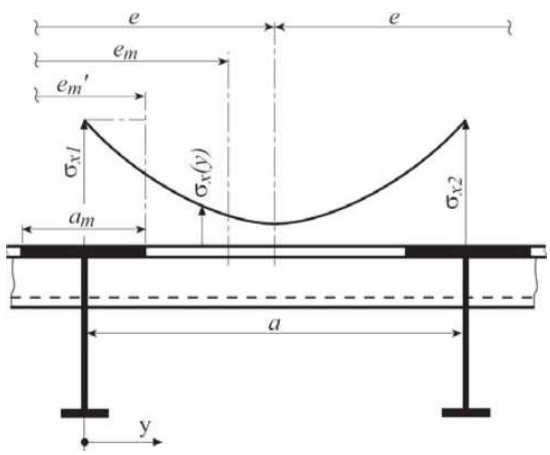

Figure 15.6 Stiffening perpendicular to web of rimary supporting member

$a \geq e_m$

$e'_m = n \cdot a_m < e_m$

$n = 2{,}7 \cdot \frac{e_m}{a} < 1$

e = Width of plating supported according to 4.3.

For $b \geq e_m$ or $a < e_m$ respectively, b and a have to be exchanged.

a_m and b_m for flange plates are in general to be determined for Ψ=1.

Note:

Scantlings of plates and stiffeners are in general to be determined according to the maximum stresses $cr_x(y)$ at webs of primary supporting member and stiffeners, respectively. For stiffeners with spacing b under compression arranged parallel to primary supporting members no value less than 0,25 • c_F shall be inserted for $c_x(y=b)$.

The stress distribution between two primary supporting members can be obtained by the following formula:

$$\sigma_x(y) = \sigma_{x1} \cdot \left\{1 - \frac{y}{e}\left[3 + c_1 - 4 \cdot c_2 - 2\frac{y}{e}(1 + c_1 - 2c_2)\right]\right\}$$

Where;

$$c_1 = \frac{\sigma_{x2}}{\sigma_{x1}} \qquad 0 \leq c_1 \leq 1$$

$$c_2 = \frac{1,5}{e} \cdot \left(e''_{m1} + e''_{m2}\right) - 0,5$$

e''_{m1} = *Proportionate effective breadth e_{m1} or proportionate effective width e'_{m1} of primary supporting member 1 within the distance e, as appropriate*

e''_{m2} = *Proportionate effective breadth e_{m2} or proportionate effective width e'_{m2} of primary supporting member 2 within the distance e, as appropriate*

σ_{x1}, σ_{x2} = *Normal stresses in flange plates of adjacent primary supporting member 1 and 2 with spacing e, based on cross-sectional properties considering the effective breadth or effective width, as appropriate*

y = *Distance of considered location from primary supporting member 1*

Shear stress distribution in the flange plates may be assumed linearly.

4.5.3.3 Lateral buckling of secondary stiffeners

$$\frac{\sigma_a + \sigma_b}{\sigma_F} \cdot S \le 1$$

Where;

σ_a = uniformly distributed compressive stress, in N/mm^2 in the direction of the stiffener axis.

σ_a = σ_x for longitudinal stiffeners

σ_a = σ_y for transverse stiffeners

σ_b = Bending stress, in N/mm^2, in the stiffener

$$\frac{M_0 + M_1}{z_{st} \cdot 10^3}$$

M_0 = Bending moment, in Nmm, due to the deformation w of stiffener, taken equal to:

$$M_0 = F_{Ki} \frac{p_z \cdot w}{c_f - p_z} \quad \text{with } (c_f - p_z) > 0$$

M_1 = Bending moment, in Nmm, due to the lateral load p equal to:

$$M_1 = \frac{p \cdot b \cdot a^2}{24 \cdot 10^3} \quad \text{For longitudinal stiffeners}$$

$$M_1 = \frac{p \cdot a \cdot (n \cdot b)^2}{c_S \cdot 8 \cdot 10^3} \quad \text{For transverse stiffeners}$$

n is to be taken equal to 1 for ordinary transverse stiffeners.

p = Lateral load in kN/m^2

F_{Ki} = Ideal buckling force, in N, of the stiffener

$$F_{Kix} = \frac{\pi^2}{a^2} \cdot E \cdot I_x \cdot 10^4 \quad \text{for longitudinal stiffeners}$$

$$F_{Kiy} = \frac{\pi^2}{(n \cdot b)^2} \cdot E \cdot I_y \cdot 10^4 \quad \text{for transverse stiffeners}$$

I_x, I_y = Net moments of inertia, in cm^4, of the longitudinal or transverse stiffener including effective width of attached plating according to 4.5.3.2. I_x and I_y are to comply with the following criteria:

$$I_x \ge \frac{b \cdot t^3}{12 \cdot 10^4}$$

$$I_y \ge \frac{a \cdot t^3}{12 \cdot 10^4}$$

p_z = Nominal lateral load, in N/mm^2, of the stiffener due to σ_x, σ_y and τ

For longitudinal stiffeners;

$$p_{zx} = \frac{ta}{b}\left(\sigma_{xl}\left(\frac{\pi \cdot b}{a}\right)^2 + 2 \cdot c_y \cdot \sigma_y + \sqrt{2}\,\tau_1\right)$$

For transverse stiffeners;

$$p_{zy} = \frac{t}{a}\left(2 \cdot c_x \cdot \sigma_{xl} + \sigma_y\left(\frac{\pi \cdot a}{n \cdot b}\right)^2\left(1 + \frac{A_y}{a \cdot t}\right) + \sqrt{2}\,\tau_1\right)$$

$$\sigma_{xl} = \sigma_x\left(1 + \frac{A_x}{b \cdot t}\right)$$

c_x, c_y = Factor taking into account the stresses perpendicular to the stiffener's axis and distributed variable along the stiffener's length

= $0,5\,(1+\Psi)$ for $0 \le \Psi \le 1$

$= \dfrac{0,5}{1-\Psi}$ for $\Psi < 0$

A_x, A_y= Net sectional area, in mm^2, of the longitudinal or transverse stiffener, respectively, without attached plating

$$\tau_1 = \left[\tau - t\sqrt{\sigma_F \cdot E\left(\frac{m_1}{a^2}+\frac{m_2}{b^2}\right)}\right] \ge 0$$

For longitudinal stiffeners:

$$\frac{a}{b} \ge 2,0 : m_1 = 1,47 \quad m_2 = 0,49$$

$$\frac{a}{b} < 2,0 : m_1 = 1,96 \quad m_2 = 0,37$$

For transverse stiffeners:

$$\frac{a}{n \cdot b} \ge 0,5 : m_1 = 0,37 \quad m_2 = \frac{1,96}{n^2}$$

$$\frac{a}{n \cdot b} < 0,5 : m_1 = 0,49 \quad m_2 = \frac{1,47}{n^2}$$

w = $w_0 + w_1$

w_0 = Assumed imperfection [mm]

$$w_{0x} \le \min\left(\frac{a}{250}, \frac{b}{250}, 10\right) \quad \text{For longitudinal stiffeners}$$

$$w_{0y} \le \min\left(\frac{a}{250}, \frac{n \cdot b}{250}, 10\right) \quad \text{For transverse stiffeners}$$

Note:

For stiffeners sniped at both ends w_o must not be taken less than the distance from the midpoint of plating to the neutral axis of the profile including effective width of plating.

w_1 = Deformation of stiffener, in mm, at midpoint of stiffener span due to lateral load p. In case of uniformly distributed load the following values for w_1 may be used:

$$w_1 = \frac{p \cdot b \cdot a^4}{384 \cdot 10^7 \cdot E \cdot I_x} \quad \text{For longitudinal stiffeners}$$

$$w_1 = \frac{5 \cdot a \cdot p \cdot (n \cdot b)^4}{384 \cdot 10^7 \cdot E \cdot I_y \cdot c_s^2} \quad \text{For transverse stiffeners}$$

c_f = elastic support provided by the stiffener, in N/mm^2

- For longitudinal stiffeners:

$$c_{fx} = F_{Kix} \cdot \frac{\pi^2}{a^2} \cdot (1 + c_{px})$$

$$c_{px} = \frac{1}{1 + \dfrac{0,91 \cdot \left(\dfrac{12 \cdot 10^4 \cdot I_x}{t^3 \cdot b} - 1\right)}{c_{x\alpha}}}$$

$$c_{x\alpha} = \left[\frac{a}{2b} + \frac{2b}{a}\right]^2 \quad \text{for } a \ge 2b$$

$$c_{x\alpha} = \left[1 + \left(\frac{a}{2b}\right)^2 +\right]^2 \quad \text{for } a < 2b$$

- For transverse stiffeners.

$$c_{fy} = c_s \cdot F_{Kiy} \cdot \frac{\pi^2}{(n \cdot b)^2} \cdot (1 + c_{py})$$

$$c_{py} = \frac{1}{1 + \dfrac{0,91 \cdot \left(\dfrac{12 \cdot 10^4 \cdot I_y}{t^3 \cdot a} - 1\right)}{c_{y\alpha}}}$$

$$c_{y\alpha} = \left[\frac{n \cdot b}{2a} + \frac{2a}{n \cdot b}\right]^2 \quad \text{for } n \cdot b \ge 2a$$

$$c_{y\alpha} = \left[1 + \left(\frac{n \cdot b}{2a}\right)^2\right]^2 \quad \text{for } n \cdot b < 2a$$

c_s = factor accounting for the boundary conditions of the transverse stiffener

= 1,0 for simply supported stiffeners

= 2,0 for partially constraint stiffeners

Z_{st} = net section modulus of stiffener (long. or transverse) in cm^3 including effective width of plating according to 4.5.3.2.

If no lateral load p is acting the bending stress σ_b is to be calculated at the midpoint of the stiffener span for that fibre which results in the largest stress value. If a lateral load p is acting, the stress calculation is to be carried out for both fibres of the stiffener's cross sectional area (if necessary for the biaxial stress field at the plating side).

4.5.3.4 Torsional buckling of secondary stiffeners

4.5.3.4.1 Longitudinal secondary stiffeners

The longitudinal ordinary stiffeners are to comply with the following criteria:

$$\frac{\sigma_x \cdot S}{\kappa_T \cdot \sigma_F} \leq 1{,}0$$

κ_T = Coefficient taken equal to:

$\kappa_T = 1{,}0$ for $\lambda_T \leq 0{,}2$

$$\kappa_T = \frac{1}{\phi + \sqrt{\phi^2 - \lambda_T^2}} \quad \text{for } \lambda_T > 0{,}2$$

$\phi = 0{,}5 \cdot [1+0{,}21\,(\lambda_T - 0{,}2) + \lambda_T^2]$

λ_T = Reference degree of slenderness taken equal to:

$$\lambda_T = \sqrt{\frac{R_F}{\sigma_{KiT}}}$$

$$\sigma_{KiT} = \frac{E}{I_P}\left(\frac{\pi^2 \cdot I_\omega \cdot 10^2}{a^2} \cdot \varepsilon + 0{,}385 \cdot I_T\right) \left[N/mm^2\right]$$

For I_P, I_T, I_ω see Figure 15.7 and Table 15.7.

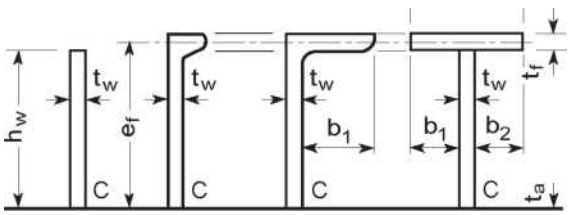

Figure 15.7 Dimensions of stiffener

I_P = Net polar moment of inertia of the stiffener, in cm^4, related to the point C

I_T = Net St. Venant's moment of inertia of the stiffener, in cm^4

I_ω = Net sectorial moment of inertia of the stiffener, in cm^6, related to the point C

ε = Degree of fixation taken equal to:

$$\varepsilon = 1 + 10^{-3}\sqrt{\frac{a^4}{\frac{3}{4}\pi^4 \cdot I_\omega\left(\frac{b}{t^3} + \frac{4h_w}{3t_w^3}\right)}}$$

h_w = Web height, in mm

t_w = Net web thickness, in mm

b_f = Flange breadth, in mm

t_f = Net flange thickness, in mm

A_w = Net web area equal to: $A_w = h_w \cdot t_w$

A_f = Net flange area equal to: $A_f = b_f \cdot t_f$

$$e_f = h_w + \frac{t_f}{2} \quad \text{[mm]}$$

4.5.3.4.2 Transverse secondary stiffeners

For transverse secondary stiffeners loaded by compressive stresses and which are not supported by longitudinal stiffeners, sufficient torsional buckling strength is to be demonstrated analogously in accordance with 4.5.3.4.1.

Table 15.7 Moments of inertia

Profile	I_P	I_T	I_ω
flat bar	$\frac{h_w^3 \cdot t_w}{3 \cdot 10^4}$	$\frac{h_w \cdot t_w^3}{3 \cdot 10^4}\left[1 - 0{,}63\frac{t_w}{h_w}\right]$	$\frac{h_w^3 \cdot t_w^3}{36 \cdot 10^6}$
sections with bulb or flange	$\left[\frac{A_w \cdot h_w^2}{3} + A_f \cdot e_f^2\right]10^{-4}$	$\frac{h_w \cdot t_w^3}{3 \cdot 10^4}\left[1 - 0{,}63\frac{t_w}{h_w}\right]$ + $\frac{b_f \cdot t_f^3}{3 \cdot 10^4}\left[1 - 0{,}63\frac{t_f}{b_f}\right]$	for bulb and angle sections: $\frac{A_f \cdot e_f^2 \cdot b_f^2}{12 \cdot 10^6}\left[\frac{A_f + 2.6\,A_w}{A_f + A_w}\right]$ for T- sections $\frac{b_f^3 \cdot t_f \cdot e_f^2}{12 \cdot 10^6}$

5. Scantlings

5.1 Hatch cover plating

5.1.1 Top plating

The thickness of the hatch cover top plating is to be obtained from the calculation according to 4. Under consideration of permissible stresses according to 3.1.

However, the thickness shall not be less than the largest of t_1, t_2 or t_{min}:

$$t_1 = 16.2 \cdot C_P \cdot a \cdot \sqrt{\frac{p}{R_{eH}}} + t_k \quad [mm]$$

$$t_2 = 10 \cdot a + t_k \quad [mm]$$

$$t_{min} = 6.0 + t_k \quad [mm]$$

For p = Vertical design load p_H or cargo load $P_{SC} + P_{DC}$;

$$C_P = 1.5 + 2.5 \cdot \left(\frac{|\sigma|}{R_{eH}} - 0.64\right) \geq 1.5$$

For p from deck design load P_{WD} or liquid pressure P_T (See A.3);

$$C_P = 1.0 + 2.5 \cdot \left(\frac{|\sigma|}{R_{eH}} - 0.64\right) \geq 1.0$$

σ = normal stress [N/mm^2] of main girders

For flange plates under compression sufficient buckling strength according to 4.5. is to be verified.

For hatch covers subject to wheel loading plate thickness shall not be less than according to Section 7, D.7.2.

5.1.2 Lower plating of double skin hatch covers and box girders

The thickness is to be obtained from the calculation according to 4. under consideration of permissible stresses according to 3.1.

The thickness shall not be less than the larger of the following values:

$t = 6{,}5 \cdot a + t_K$ [mm]

$t_{min} = 5{,}0 + t_K$ [mm]

The lower plating of hatch covers for spaces in which liquids are carried is to be designed for the liquid pressure and the thickness is to be determined according to 5.1.1.

5.2 Main girders

5.2.1 Scantlings of main girders are obtained from the calculation according to 4. under consideration of permissible stresses according to 3.1.

For all components of main girders sufficient safety against buckling shall be verified according to 4.5. For biaxial compressed flange plates this is to be verified within the effective widths according to 4.5.3.2.

The thickness of main girder webs shall not be less than greater value obtained by of the following formula:

$$t = 6{,}5 \cdot a + t_K \text{ [mm]}$$

$$t_{min} = 5{,}0 + t_K \text{ [mm]}$$

5.2.2 For hatch covers of bulk carriers according to Section 27 the ratio of flange width to web height shall not exceed 0,4, if the unsupported length of the flange between two flange supports of main girders is larger than 3,0 m. The ratio of flange outstand to flange thickness shall not exceed 15.

5.2.3 At intersections of flanges from two girders, notch stresses have to be observed.

5.3 Edge girders (Skirt plates)

5.3.1 Scantlings of edge girders are obtained from the calculations according to 4 under consideration of permissible stresses according to 3.1.

For all components of edge girders sufficient safety against buckling shall be verified according to 4.5.

The thickness of the outer edge girders exposed to wash of sea shall not be less than the largest of the following values:

$$t_1 = 16.2 \cdot a \cdot \sqrt{\frac{p_A}{R_{eH}}} + t_k \quad [\text{mm}]$$

$$t_2 = 8.5 \cdot a + t_k \quad [\text{mm}]$$

$$t_{min} = 5.0 + t_k \quad [\text{mm}]$$

5.3.2 The stiffness of edge girders of weather deck hatch covers is to be sufficient to maintain adequate sealing pressure between securing devices. The moment of inertia of edge girders is not to be less than:

$$I = 6 \cdot q \cdot s^4 \text{ [cm}^4\text{]}$$

q = Packing line pressure [N/mm], minimum 5 N/mm

s = Spacing [m] of securing devices

5.3.3 For all components of edge girders sufficient safety against buckling is to be verified according to Section 3, C.

5.3.4 For hatch covers of spaces in which liquids are carried, the packing line pressure shall also be ensured in case of hatch cover loading due to liquid pressure.

5.4 Hatch cover stiffeners

The net section modulus W_{net} and net shear area A_{snet} of uniformly loaded hatch cover stiffeners constraint at both ends shall not be less than:

$$W_{net} = \frac{104}{R_{eH}} \cdot a \cdot \ell^2 \cdot p \quad [\text{cm}^3]$$

$$A_{snet} = \frac{10 \cdot a \cdot \ell \cdot p}{R_{eH}} \quad [\text{cm}^2]$$

The net thickness [mm] of the stiffener (except u-beams/trapeze stiffeners) web is to be taken not less than 4 mm.

The net section modulus of the stiffeners is to be determined based on an attached plate width assumed equal to the stiffener spacing.

For flat bar stiffeners and buckling stiffeners, the ratio h/t_w is to be not greater than $15 \cdot k^{0,5}$, where:

h = Height of the stiffener

t_w = Net thickness of the stiffener

k = $235/R_{eH}$

Stiffeners parallel to main girder webs and arranged within the effective breadth according to Section 3, B.5. shall be continuous at crossing transverse girders and may be regarded for calculating the cross sectional properties of main girders. It is to be verified that the resulting combined stress of those stiffeners, induced by the bending of main girders and lateral pressures, does not exceed the permissible stress according to 3.1.

For hatch cover stiffeners under compression sufficient safety against lateral and torsional buckling according to 4.5. is to be verified.

For hatch covers subject to wheel loading or point loads stiffener scantlings are to be determined under consideration of the permissible stresses according to 3.1.

5.5 Hatch cover supports

5.5.1 For the transmission of the support forces resulting from the load cases specified in 2.1 - 2.6, supports are to be provided which are to be designed such that the nominal surface pressures in general do not exceed the following values:

$$p_{n\,max} = d \cdot p_n \ [N/mm^2]$$

d = 3,75 – 0,015 **L**

d_{max} = 3,0

d_{min} = 1,0 in general

= 2,0 for partial loading conditions (see 2.3.1)

p_n = see Table 15.8

For metallic supporting surfaces not subjected to relative displacements the following applies:

$$p_{nmax} = 3 \cdot p_n \ [N/mm^2]$$

Where large relative displacements of the supporting surfaces are to be expected, the use of material having low wear and frictional properties is recommended.

Note:

*When the maker of vertical hatch cover support material can provide proof that the material is sufficient for the increased surface pressure, not only statically but under dynamic conditions including relative motion for adequate number of cycles, permissible nominal surface pressure may be relaxed at the discretion of **TL**. However, realistic long term distribution of spectra for vertical loads and relative horizontal motion should be assumed and agreed with **TL**.*

5.5.2 Drawings of the supports shall be submitted. In the drawings of the supports the permitted maximum pressure given by the material manufacturer is to be specified.

Table 15.8 Permissible nominal surface pressure p_n

Support material	p_n [N/mm²] when loaded by	
	vertical force	horizontal force (on stoppers)
Hull structural steels	25	40
hardened steels	35	50
plastic materials on steel	50	-

5.5.3 If necessary, sufficient abrasive strength may be shown by tests demonstrating an abrasion of support surfaces of not more than 0,3 mm per one year in service at a total distance of shifting of 15 000 m/ year.

5.5.4 The substructures of the supports have to be of such a design, that a uniform pressure distribution is achieved.

5.5.5 Irrespective of the arrangement of stoppers, the supports shall be able to transmit the following force P_h in the longitudinal and transverse direction:

$$P_h = \mu \cdot \frac{P_V}{\sqrt{d}}$$

P_v = Vertical supporting force

μ = Frictional coefficient

= 0,5 for steel on steel

= 0,35 for non-metallic, low-friction support materials on steel

5.5.6 For non-metallic, low-friction support materials on steel, the friction coefficient may be reduced but not to be less than 0,35 and to the satisfaction of **TL**.

5.5.7 Supports as well as the adjacent structures and substructures are to be designed such that the permissible stresses according to 3.1 are not exceeded.

5.5.8 For substructures and adjacent structures of supports subjected to horizontal forces P_h, a fatigue strength analysis is to be carried out according to Section 4, D.5 by using the stress spectrum B and applying the horizontal force P_h.

5.6 Securing of weather deck hatch covers

5.6.1 Securing devices between cover and coaming and at cross-joints are to be provided to ensure weathertightness. Sufficient packing line pressure is to be maintained. The packing line pressure is to be specified in the drawings.

Securing devices shall be appropriate to bridge displacements between cover and coaming due to hull deformations.

5.6.2 Securing devices are to be of reliable construction and effectively attached to the hatchway coamings, decks or covers. Individual securing devices on each cover are to have approximately the same stiffness characteristics.

5.6.3 Where rod cleats are fitted, resilient washers or cushions are to be incorporated.

5.6.4 Where hydraulic cleating is adopted, a positive means is to be provided to ensure that it remains mechanically locked in the closed position in the event of failure of the hydraulic system.

5.6.5 Sufficient number of securing devices is to be provided at each side of the hatch cover considering the requirements of 5.3.2. This applies also to hatch covers consisting of several parts.

5.6.6 Specifications of materials of securing devices and their weldings are to be shown in the drawings of the hatch covers.

5.6.7 The net cross-sectional area of the securing devices is not to be less than:

$$A = 0{,}28 \cdot q \cdot s \cdot k_\ell \quad [\text{cm}^2]$$

q = packing line pressure [N/mm], minimum 5 N/mm

s = spacing between securing devices [m], not to be taken less than 2 m

$$k_\ell = \left[\frac{235}{R_{eH}}\right]^e$$

R_{eH} is not to be taken greater than 0,70 R_m.

e = 0,75 for $R_{eH} > 235$ N/mm^2

= 1,00 for $R_{eH} \leq 235$ N/mm^2

R_m = Minimum tensile strength of material in N/mm^2.

Rods or bolts are to have a net diameter not less than 19 mm for hatchways exceeding 5 m^2 in area.

Securing devices of special design in which significant bending or shear stresses occur may be designed according to 5.6.8. As load the packing line pressure q multiplied by the spacing between securing devices s is to be applied.

5.6.8 The securing devices of hatch covers, on which cargo is to be lashed, are to be designed for the lifting forces according to 2.3., load case C, refer to Figure 15.8. Unsymmetrical loadings, which may occur in practice, are to be considered. Under these loadings the equivalent stress in the securing devices is not to exceed:

$$\sigma_V = \frac{150}{k_\ell} \quad \left[\text{N/mm}^2\right]$$

Note:
The partial load cases given in Table 15.3 may not cover all unsymmetrical loadings, critical for hatch cover lifting.

Chapter 5.6 of IACS Rec. 14 should be referred to for the omission of anti lifting devices.

5.6.9 Securing devices of hatch covers for spaces in which liquids are carried shall be designed for the lifting forces according to 2.4., load case D.

5.6.10 Cargo deck hatch covers consisting of several parts have to be secured against accidental lifting.

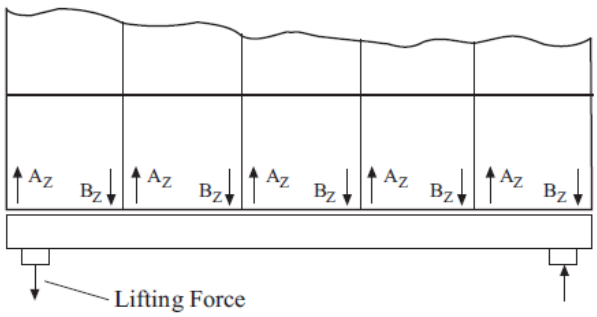

Figure 15.8 Lifting forces at a hatch cover

5.7 Hatch cover stoppers

Hatch covers shall be sufficiently secured against shifting.

Stoppers are to be provided for hatch covers on which cargo is carried as well as for hatch covers, which edge girders have to be designed for p_A > 175 kN/m^2 according to 2.1.5.

Design forces for the stoppers are obtained from the loads according to 2.1.5 and 2.6.

The permissible stress in stoppers and their substructures in the cover and of the coamings is to be determined according to 3.1. The provisions in 5.5 are to be observed.

5.8 Cantilevers, load transmitting elements

5.8.1 Cantilevers and load transmitting elements which are transmitting the forces exerted by hydraulic cylinders into the hatchway covers and the hull are to be designed for the forces stated by the manufacturer. The permissible stresses according to 3.1 are not to be exceeded.

5.8.2 Structural members subjected to compressive stresses are to be examined for sufficient safety against buckling, according to 4.5.

5.8.3 Particular attention is to be paid to the structural design in way of locations where loads are introduced into the structure.

5.9 Container foundations on hatch covers

Container foundations and their substructures are to be designed for the loads according to 2., load cases B and C, respectively, applying the permissible stresses according to 3.1.

6. Weather Tightness of Hatch Covers

For weather deck hatch covers packings are to be provided, for exceptions see 6.2.

6.1 Packing material

6.1.1 The packing material is to be suitable for all expected service conditions of the ship and is to be compatible with the cargoes to be transported.

The packing material is to be selected with regard to dimensions and elasticity in such a way that expected deformations can be carried. Forces are to be carried by the steel structure only.

The packings are to be compressed so as to give the necessary tightness effect for all expected operating conditions.

Special consideration shall be given to the packing arrangement in ships with large relative movements between hatch covers and coamings or between hatch cover sections.

6.1.2 If the requirements in 6.2 are fulfilled the weather tightness can be dispensed with.

6.2 Non-weathertight hatch covers

6.2.1 Upon request and subject to compliance with the following conditions the fitting of weather tight gaskets according to 6.1 may be dispensed with for hatch covers of cargo holds soley for the transport of containers:

6.2.1.1 The hatchway coamings shall be not less than 600 mm in height.

6.2.1.2 The exposed deck on which the hatch covers are located is situated above a depth H(x).

H(x) is to be shown to comply with the following calculated criteria:

$$H(x) \geq T_{fb} + f_b + h \text{ [m]}$$

T_{fb} = Draught corresponding to the assigned summer load line[m]

f_b = Minimum required freeboard determined in accordance with ICLL [m]

h = 4,6 m for $\frac{x}{L} \leq 0{,}75$

= 6,9 m for $\frac{x}{L} > 0{,}75$

6.2.1.3 Labyrinths or equivalents are to be fitted proximate to the edges of each panel in way of the coamings. The clear profile of these openings is to be kept as small as possible.

6.2.1.4 Where a hatch is covered by several hatch cover panels the clear opening of the gap in between the panels shall be not wider than 50mm.

6.2.1.5 The labyrinths and gaps between hatch cover panels shall be considered as unprotected openings with respect to the requirements of intact and damage stability calculations.

6.2.1.6 With regard to drainage of cargo holds and the necessary fire-fighting system reference is made to the **TL** Rules for Machinery Chapter 4, Section 16 and 18.

6.2.1.7 Bilge alarms should be provided in each hold fitted with non-weathertight covers.

6.2.1.8 Furthermore, the requirements for the carriage of dangerous goods are to be complied with, refer to Chapter 3 of IMO MSC/Circ. 1087.

6.2.2 Securing devices

In the context of 6.2 an equivalence to 5.6 can be considered subject to:

- The proof that in accordance with 2.3 (load case C) securing devices are not to be required and additionally

- The transverse cover guides are effective up to a height h_E above the cover supports, see Figure 15.9. The height h_E shall not be less than the greater of the following:

h_{Emin} = Height of the face plate [mm] + 150

where $h_e = 1{,}75 \cdot \sqrt{2 \cdot e \cdot s}$ [mm]

e = Largest distance of the cover guides from the longitudinal face plate [mm]

s = Total clearance [mm]

with

$10 \leq s \leq 40$

The transverse guides and their substructure are to be dimensioned in accordance with the loads given in 2.6 acting at the position h_E using the equivalent stress level $\sigma_v = R_{eH}$ [N/mm^2].

6.3 Drainage arrangements

6.3.1 Drainage arrangement at hatch covers

Cross-joints of multi-panel covers are to be provided with efficient drainage arrangements.

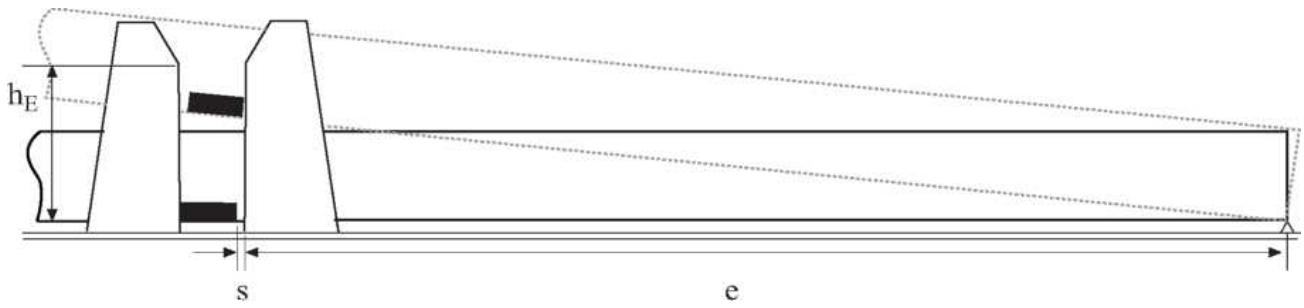

Figure 15.9 Height of transverse cover guides

6.3.2 Drainage arrangement at hatch coamings

6.3.2.1 If drain channels are provided inside the line of gasket by means of a gutter bar or vertical extension of the hatch side and end coaming, drain openings are to be provided at appropriate positions of the drain channels.

6.3.2.2 Drain openings in hatch coamings are to be arranged with sufficient distance to areas of stress concentration (e.g. hatch corners, transitions to crane posts).

6.3.2.3 Drain openings are to be arranged at the ends of drain channels and are to be provided with non-return valves to prevent ingress of water from the outside. It is unacceptable to connect fire hoses to the drain openings for this purpose.

6.3.2.4 If a continuous outer steel contact between cover and ship structure is arranged, drainage from the space between the steel contact and the gasket is also to be provided for.

6.4 Tightness test, trials

6.4.1 The self-tightening steel hatch covers on weather decks and within open superstructures are to be hose tested. The water pressure should not be less than 2 bar and the hose nozzle should be held at a distance of not more than 1,5 m from the hatch cover to be tested. The nozzle diameter should not be less than 12 mm. During frost periods equivalent tightness tests may be carried out to the satisfaction of the Surveyor.

6.4.2 Upon completion of the hatchway cover system trials for proper functioning are to be carried out in presence of the Surveyor.

C. Hatch Coamings and Girders

1. General

1.1 Hatch coamings which are part of the longitudinal hull structure are to be designed according to Section 5. For structural members welded to coamings and for cutouts in the top of coaming sufficient fatigue strength according to Section 4, D.5 is to be verified.

In case of transverse coamings of ships with large deck openings Section 6, F. is to be observed.

1.2 Coamings which are 600 mm or more in height are to be stiffened by a horizontal stiffener.

Where the unsupported height of a coaming exceeds 1.2 m additional stiffeners are to be arranged.

Additional stiffeners may be dispensed with if this is justified by the ship's service and if sufficient strength is verified (e.g. in case of container ships).

Stiffeners of hatch coamings are to be continuous over the breadth and length of hatch coamings.

Longitudinal hatchway coamings are to be adequately supported by stays or brackets. Adequate safety against buckling is to be proved for longitudinal coamings which are part of the longitudinal hull structure.

1.3 Hatch coamings and supporting structures are to be adequately stiffened to accommodate the loading from hatch covers, in longitudinal, transverse and vertical directions.

Coaming stays are to be supported by appropriate substructures.

Under deck structures are to be designed under consideration of permissible stresses according to B.3.1.

1.4 Hatchway coamings which are exposed to the wash of sea are to be designed for the loads according to B.2.1.5

1.5 On ships carrying cargo on deck, such as timber, coal or coke, the stays are to be spaced not more than 1,5 m apart.

Where other structural members of the hull, e.g. frames, deck beams, bulkheads, hatchway coamings, bulwark stays etc. are subjected to loads from containers, cell guide systems and container lashing devices, these members are to be strengthened wherever necessary so that the actual stresses will not exceed those upon which the formulae in the respective Sections are based.

1.6 Coaming plates are to extend to the lower edge of the deck beams; or hatch side girders are to be fitted that extend to the lower edge of the deck beams. Extended coaming plates and hatch side girders are to be flanged or fitted with face bars or half-round bars. Refer to Figure 15.10.

1.7 The connection of the coamings to the deck at the hatchway corners is to be carried out with special care. For bulk carriers, see also Section 27, F.

For rounding of hatchway corners, see also Section 7, D.5.

1.8 For hatch way coamings which are designed on the basis of strength calculations as well as for hatch girders, cantilevers and pillars, see Section 8.D.

1.9 Longitudinal hatch coamings with a length exceeding 0,1 · **L** are to be provided with tapered brackets or equivalent transitions and a corresponding substructure at both ends. At the end of the brackets they are to be connected to the deck by full penetration welds of minimum 300 mm in length.

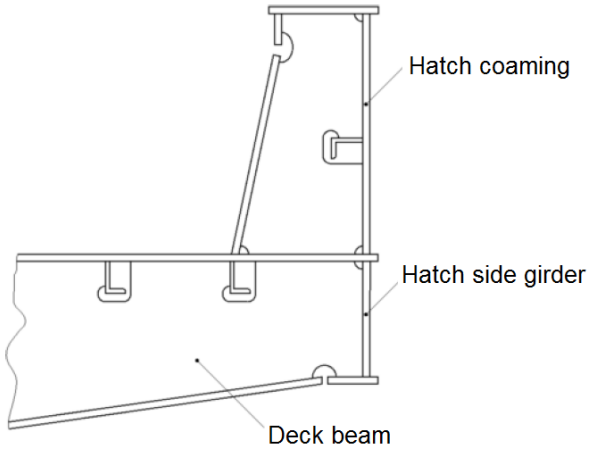

Figure 15.10 Example for a hatch side girder

2. Scantlings

2.1 Plating

The thickness of weather deck hatch coamings shall not be less than the larger of the following values:

$$t = c \cdot a \cdot \sqrt{\frac{p_A}{ReH}} + t_k \quad [mm]$$

$$t_{min} = 6 + \frac{L}{100} + t_k \quad [mm]$$

L need not be taken greater than 300 m

t_{min} is to be taken as 9,5 + t_K [mm] for bulk carrier according to Section 27.

c = 16.4 for bulk carrier according to Section 27

c = 14.6 for all other ships

For grab operation see also Section 27, B.10.

The thickness of weather deck hatch coamings, which are part of the longitudinal hull structure, is to be designed analogously to side shell plating according to Section 7.

2.2 Coaming stays

2.2.1 Coaming stays are to be designed for the loads and permissible stresses according to B.

2.2.2 At the connection with deck, the net section modulus W_{net}, in cm^3, and the gross thickness t_w, in mm, of the coaming stays designed as beams with flange (examples 1 and 2 are shown in Figure 15.11) are to be taken not less than:

$$W_{net} = \frac{526}{ReH} \cdot e \cdot h_s{}^2 \cdot p_A \quad [cm^3]$$

$$t_W = \frac{2}{ReH} \cdot \frac{e \cdot h_s \cdot p_A}{h_W} + t_k \quad [mm]$$

e = Spacing of coaming stays [m]

h_s = Height of coaming stays [m]

h_w = Web height of coaming stay at its lower end [m]

For the calculation of W_{net} the effective breadth of the coaming plate shall not be larger than the effective plate width according to 4.5.3.2
Face plates may only be included in the calculation if an appropriate substructure is provided and welding ensures an adequate joint.

For other designs of coaming stays, such as those shown in Figure 15.11, examples 3 and 4, the stresses are to be determined through a grillage analysis or FEM. The calculated stresses are to comply with the permissible stresses according to B.3.1.

Coaming stays are to be supported by appropriate substructures. Underdeck structures are to be designed under consideration of permissible stresses according to B.

Webs are to be connected to the deck by fillet welds on both sides with a throat thickness of a = 0.44 t_w.

For toes of stay webs within $0.15 \cdot h_w$ the throat thickness is to be increased to a = $0.7 \cdot tw$ for tw ≤10 mm. For t_w > 10 mm deep penetration double bevel welds are to be provided in this area.

2.2.3 For coaming stays, which transfer friction forces at hatch cover supports, fatigue strength according to Section 3, D is to be considered, refer also to B.5.5.

2.3 Horizontal stiffeners

The stiffeners shall be continuous at the coaming stays.

For stiffeners with both ends constraint the elastic net section modulus W_{net} and net shear area $A_{s,net}$ shall not be less than:

$$W_{net} = \frac{c \cdot a \cdot \ell^2 \cdot p_A}{f_p \cdot R_{eH}} \quad [cm^3]$$

$$A_{s,net} = \frac{10 \cdot a \cdot \ell \cdot p_A}{R_{eH}} \quad [cm^2]$$

c = 75; for bulk carriers according to Section 27

c = 83; for all other ships

f_p = ratio of plastic and elastic section modulus

- For bulk carrier according to Section 27

$$f_p = \frac{W_{p\ell}}{W_{e\ell}} \leq \frac{R_m}{ReH}$$

- For ships other than bulk carrier according to Section 27.

f_p = 1,0

- In the absence of more precise evaluation

f_p = 1,16

$W_{p\ell}$ = plastic

$W_{e\ell}$ = elastic

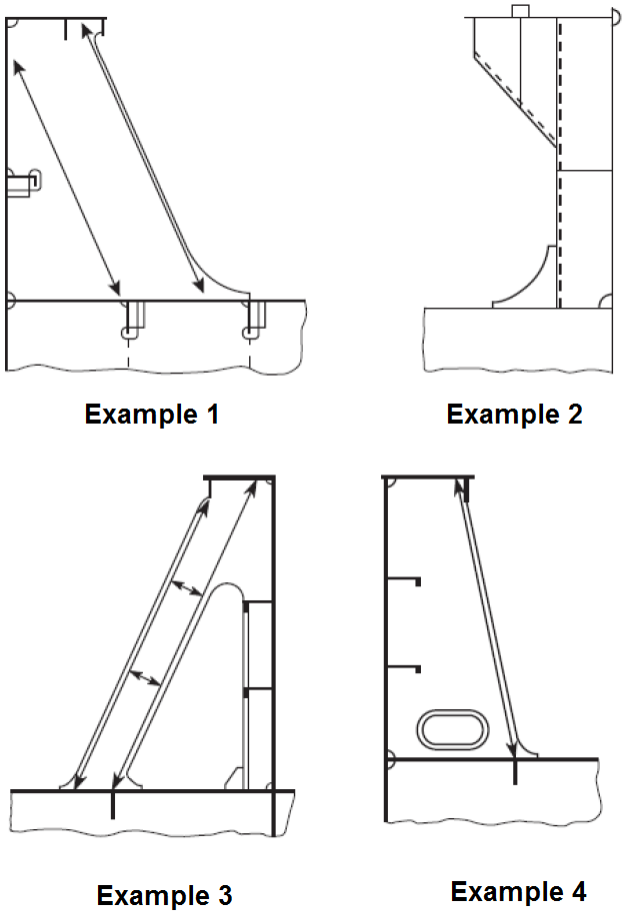

Figure 15.11 Examples of coaming stays

For sniped stiffeners at

Horizontal stiffeners on hatch

D. Smaller Openings

1. Miscellaneous

1.1 Manholes and small

1.3 Openings in

1.4 Companionways or

1.5 For ships engaged

h = 600 mm on decks in Position 1

h = 380 mm on decks in Position 2

1.6 The doors of the companionways are to be capable of being operated and secured from both sides. They are to be closed weathertight by rubber sealings and toggles.

1.7 Access hatchways shall have a clear width of at least 600 · 600 mm.

1.8 Weathertight small hatches in Load Line Position 1 and 2 according to ICLL shall be generally equivalent to the international standard ISO 5778.

1.9 For special requirements for strength and securing of small hatches on the exposed fore deck, see 2.

1.10 According to the IACS Unified Interpretation SC 247 the following applies to securing devices of emergency escape hatches:

- Securing devices shall be of a type which can be opened from both sides.
- The maximum force needed to open the hatch cover should not exceed 150 N.
- The use of a spring equalizing, counterbalance or other suitable device on the ring side to reduce the force needed for opening is acceptable.

2. Strength and Securing of Small Hatches on the Exposed fore Deck

2.1 General

2.1.1 The strength of, and securing devices for, small hatches fitted on the exposed fore deck over the forward 0,25 L are to comply with the following requirements.

2.1.2 Small hatches in this context are hatches designed for access to spaces below the deck and are capable to be closed weathertight or watertight, as applicable. Their opening is normally 2,5 square meters or less.

2.1.3 For securing devices of emergency escape hatches see 1.9. Additionally the hatches are to be fitted with central locking devices according to 2.4.1 (method C). Regulations 2.5.3 and 2.6 need not be complied with.

2.2 Application

For ships on the exposed deck over the forward 0,25 L, applicable to all types of sea going ships

- That are contracted for construction on or after 1st January 2004 and
- Where the height of the exposed deck in way of the hatch is less than 0,1 L or 22 m above the summer load waterline, whichever is the lesser

2.3 Strength

2.3.1 For small rectangular steel hatch covers, the plate thickness, stiffener arrangement and scantlings are to be in accordance with Table 15.9 and Figure 15.12.

Table 15.9 Scantlings for small steel hatch covers on the fore deck

Nominal size [mm x mm]	Cover plate thickness [mm]	Primary stiffeners	Secondary stiffeners
		Flatbar [mm x mm]; number	
630x 630	8	—	—
630x 830	8	100 x 8; 1	—
830x 630	8	100 x 8; 1	—
830x 830	8	100 x 10; 1	—
1030 x 1030	8	120 x 12; 1	80 x 8; 2
1330 x 1330	8	150 x 12; 2	100 x 10; 2
For ships with L < 80 m the cover scantlings may be reduced by the factor $0{,}11 \cdot \sqrt{L} \geq 0{,}75$			

Stiffeners, where fitted, are to be aligned with the metal-to-metal contact points, required in 2.5.1, see Figure 15.12. Primary stiffeners are to be continuous. All stiffeners are to be welded to the inner edge stiffener, see Figure 15.13.

2.3.2 The upper edge of the hatchway coamings is to be suitably reinforced by a horizontal section, normally not more than 170 mm to 190 mm from the upper edge of the coamings.

2.3.3 For small hatch covers of circular or similar shape, the cover plate thickness and reinforcement is to be specially considered.

2.3.4 For small hatch covers constructed of materials other than steel, the required scantlings are to provide equivalent strength.

2.4 Primary securing devices

2.4.1 Small hatches located on exposed fore deck subject to the application according to 2.2 are to be fitted with primary securing devices such that their hatch covers can be secured in place and weathertight by means of a mechanism employing any one of the following methods:

- method A: butterfly nuts tightening onto forks (clamps)
- method B: quick acting cleats
- method C: central locking device

2.4.2 Dogs (twist tightening handles) with wedges are not acceptable.

2.5 Requirements for primary securing

2.5.1 The hatch cover is to be fitted with a gasket of elastic material. This is to be designed to allow a metal to metal contact at a designed compression and to prevent over-compression of the gasket by green sea forces that may cause the securing devices to be loosened or dislodged. The metal-to-metal contacts are to be arranged close to each securing device in accordance with Figure 15.12 and of sufficient capacity to withstand the bearing force.

2.5.2 The primary securing method is to be designed and manufactured such that the designed compression pressure is achieved by one person without the need of any tools.

2.5.3 For a primary securing method using butterfly nuts, the forks (clamps) are to be of robust design. They are to be designed to minimize the risk of butterfly nuts being dislodged while in use; by means of curving the forks upward, a raised surface on the free end, or a similar method. The plate thickness of unstiffened steel forks is not to be less than 16 mm. An example arrangement is shown in Figure 15.13.

2.5.4 For small hatch covers located on the exposed deck forward of the foremost cargo hatch, the hinges are to be fitted such that the predominant direction of green sea will cause the cover to close, which means that the hinges are normally to be located on the fore edge.

2.5.5 On small hatches located between the main hatches, for example between Nos. 1 and 2, the hinges are to be placed on the fore edge or outboard edge, whichever is practicable for protection from green water in beam sea and bow quartering conditions.

2.6 Secondary securing device

Small hatches on the fore deck are to be fitted with an independent secondary securing device e.g. by means of a sliding bolt, a hasp or a backing bar of slack fit, which is capable of keeping the hatch cover in place, even in the event that the primary securing device became loosened or dislodged. It is to be fitted on the side opposite to the hatch cover hinges.

Fall arresters against accidental closing are to be provided.

E. Engine and Boiler Room Casings

1. Deck Openings

1.1 The openings above engine rooms and boiler rooms should not be larger than necessary. In way of these rooms sufficient transverse strength is to be ensured.

(1) *For ships contracted for construction prior to 1st July 2007 refer to IACS UR S26, para. 3.*

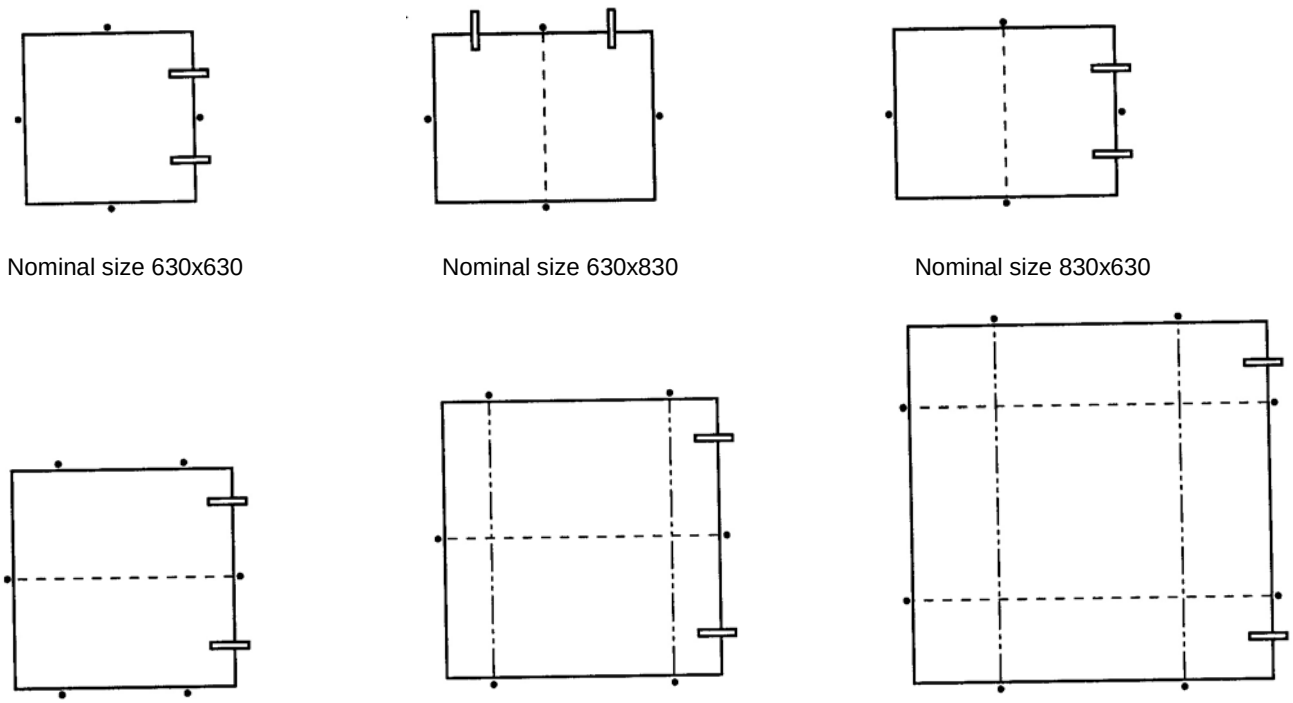

Hinge

Securing device/metal to metal contact

- - - - Primary stiffener

- - — Secondary stiffener

Figure 15.12 Arrangement of stiffener

① : butterfly nut
② : bolt
③ : pin
④ : center of pin
⑤ : fork (clamp) plate
⑥ : hatch cover
⑦ : gasket
⑧ : hatch coaming
⑨ : bearing pad welded on the bracket
of a toggle bolt for metal to metal contact
⑩ : stiffener
⑪ : inner edge stiffener

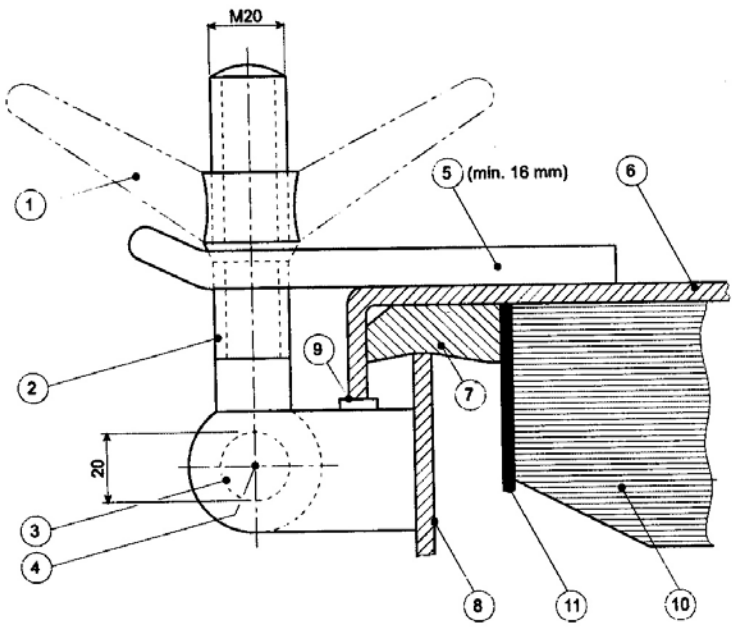

Figure 15.13 Example of a primary securing method

1.2 Engine and boiler room openings are to be well rounded at their corners, and if required, to be provided with strengthenings, unless proper distribution of the longitudinal stresses is ensured by the side walls of superstructures or deckhouses. See also Section 7, D.5.

2. Engine and Boiler Room Casings

2.1 Engine and boiler room openings on weather decks and inside open superstructures are to be protected by casings of sufficient height.

2.2 The height of casings on the weather deck of ships with full scantling draught is to be not less than 1.8 m where L does not exceed 75 m, and not less than 2,3 m where L is 125 m or more. Intermediate values are to be determined by interpolation.

2.3 The scantlings of stiffeners, plating and covering of exposed casings are to comply with the requirements for superstructure end bulkheads and for deckhouses according to Section 13, C.

2.4 Inside open superstructures the casings are to be stiffened and plated according to Section 13, C., as for an aft end bulkhead.

2.5 The height of casings on superstructure decks is to be at least 760 mm. The thickness of their plating may be 0,5 mm less than derived from 2.3, and the stiffeners are to have the same thickness and a depth of web of 75 mm, being spaced at 750 mm.

2.6 The plate thickness of engine and boiler room casings below the freeboard deck or inside closed superstructures is to be 5 mm, and 6,5 mm in cargo holds; stiffeners are to have at least 75 mm web depth, and the same thickness as the plating, when being spaced at 750 mm.

2.7 For ships engaged in sheltered water service (assigned with the notations **K6, L1** and **L2**), the height of machinery and boiler room casings is not to be less than 600 mm, their thickness is not to be less than 3 mm. Coamings are not to be less in height than 350 mm and they are not to be less in thickness than 4 mm.

2.8 The coaming plates are to be extended to the lower edge of the deck beams.

3. Doors in Engine and Boiler Room Casings

3.1 The doors in casings on exposed decks and within open superstructures are to be of steel, well stiffened and hinged, and capable of being closed from both sides and secured weathertight by toggles and rubber sealings.

Note:
For ships with reduced freeboard (B-minus) or tanker freeboard (A), Regulation 26 (1) of ICLL is to be observed and see IACS Unified Interpretations LL 7.

3.2 The doors are to be at least of the same strength as the casing walls in which they are fitted.

3.3 The height of the doorway sills is to be 600 mm above decks in pos. 1 and 380 mm above decks in pos. 2.

SECTION 16

HULL OUTFITTING

A. Side Scuttles, Windows and Skylights

1. General

1.1 Side scuttles and windows, together with their glasses, deadlights **(1)** and storm covers**,** if fitted, are to be of an approved design and substantial construction in accordance with, or equivalent to, recognized national or international standards. Non-metallic frames are not acceptable.

1.2 Side scuttles are defined as being round, or oval, openings with an area not exceeding 0.16 m^2. Round or oval openings having areas exceeding 0.16 m^2 shall be treated as windows.

1.3 Windows are defined as being rectangular openings generally, having a radius at each corner relative to the window size in accordance with recognized national or international standards, and round or oval, openings with an area exceeding 0.16 m^2.

1.4 Side scuttles to the following spaces are to be fitted with hinged inside deadlights:

- Spaces below freeboard deck,
- Spaces within the first tier of enclosed superstructures, **(2)**
- First tier deckhouses on the freeboard deck protecting openings leading below or considered buoyant in stability calculations.

Deadlights are to be capable of being closed and secured watertight if fitted below the freeboard deck and weathertight if fitted above.

1.5 Side scuttles are not to be fitted in such a position that their sills are below a line drawn parallel to the freeboard deck at side and having its lowest point 2,5% of the breadth (B), or 500 mm, whichever is the greatest distance, above the Summer Load Line (or Timber Summer Load Line if assigned).

1.6 Side scuttles are to be of the non-opening type in ships subject to damage stability regulations, if calculations indicate that they would become immersed by any intermediate stage of flooding or the final equilibrium waterplane in any required damage case

1.7 Windows are not to be fitted below freeboard deck, in the first tier end bulkheads or sides of enclosedsuperstructures and in first tier deckhouses considered buoyant in the stability calculations or protecting openings leading below. **(2)**

1.8 Side scuttles and windows at the side shell in the second tier, protecting direct access below or considered buoyant in the stability calculations, are to be provided with efficient hinged inside deadlights capable of being effectively closed and secured weathertight.

1.9 Side scuttles and windows set inboard from the side shell in the second tier protecting direct access below to spaces listed in 1.4 are to be provided with either efficient hinged inside deadlights or, where they are accessible, permanently attached external storm covers of approved design and of substantial construction and capable of being effectively closed and secured weathertight.

1.10 Cabin bulkheads and doors in the second tier separating side scuttles and windows from a direct access leading below may be accepted in place of deadlights or storm covers fitted to the side scuttles and windows.

1.11 Deckhouses situated on a raised quarter deck or on the deck of a superstructure of less than standard height or on the deck of a deckhouse of less than standard height, may be regarded as being in the second tier as far as the requirements for deadlights are concerned, provided the height of the raised quarter deck, superstructure or deckhouse is equal to, or greater than, the standard quarter deck height.

1.12 Fixed or opening skylights are to have a glass thickness appropriate to their size and position as required for side scuttles and windows. Skylight glasses in any position are to be protected from mechanical damage and, where fitted in position 1 or 2, are to be provided with permanently attached deadlights or storm covers

---

(1) *Deadlights are fitted to the inside of windows and side scuttles, while storm covers are fitted to the outside of windows, where accessible, and may be hinged or portable.*

(2) *For the definition of the enclosed superstructures see ICLL, Rule 3 (10) (b).*

2. Construction and Tests of Windows and Side scuttles

2.1 The design, construction and testing of windows and side scuttles is to be in accordance with ISO standard 1751, 3903 and 21005 or any other recognized, equivalent national or international standard.

2.2 Variations from respective standards may require additional proof of sufficient strength by direct calculation or tests. This is to be observed for bridge windows in exposed areas (e.g. within forward quarter of ships length) in each case.

2.3 Glass panes have to be made of thermally toughened safety glass (TSG), or laminated safety glass made of TSG. The ISO standards 614 and 21005 are to be observed.

2.4 The glass thickness for windows and side scuttles has to be determined in accordance with the respective ISO standard 21005 or any other equivalent national or international standard, considering the design loads which are to be in accordance with Section 5 and Section 13. Furthermore for 2nd tier and below the design load for side scuttles and windows is in addition to be in accordance with ISO 5779 and 5780.

2.5 Heated glass panes have to be in accordance with ISO 3434.

2.6 An equivalent thickness (t_s) of laminated toughened safety glass is to be determined from the following formula:

$$t_s = \sqrt{t_1^2 + t_2^2 + ... + t_n^2}$$

n = number of laminates
t_i = thickness of laminate, in mm
t_s = thickness of equivalent single plate, in mm

B. Scuppers, Inlets and Discharges

1. Inlets and Discharges

1.1 Discharges led through the shell either from spaces below the freeboard deck or from within superstructures and deckhouses on the freeboard deck fitted with doors complying with the requirements of ICLL Reg. 12 are to be fitted with efficient and accessible means for preventing water from passing inboard. Normally each separate discharge is to have one automatic non-return valve with a positive means of closing it from a position above the freeboard deck. Where the inboard end of the discharge pipe is located at least 0.01 L above the summer load line, the discharge may have two automatic non-return valves without positive means of closing. Where that vertical distance exceeds 0.02 L, a single automatic non-return valve without positive means of closing may be accepted. The means for operating the positive-action valve is to be readily accessible and provided with an indicator showing whether the valve is open or closed.

1.2 One automatic non-return valve and one sluice valve controlled from above the freeboard deck instead of one automatic non-return valve with a positive means of closing from a position above the freeboard deck, is acceptable.

1.3 Where two automatic non-return valves are required, the inboard valve is always to be accessible for examination under service conditions (i.e., the inboard valve is to be above the level of the tropical load line). If this is not practicable, the inboard valve need not be located above the tropical load line, provided that a locally controlled sluice valve is fitted between the two automatic non-return valves.

1.4 Where sanitary discharges and scuppers lead overboard through the shell in way of machinery spaces, a locally operated positive-closing valve at the shell, together with a non-return valve inboard, is acceptable. The controls of the valves are to be in an easily accessible position.

1.5 The position of the inboard end of discharges is to be related to the summer timber load line when the timber freeboard is assigned.

1.6 The requirements for non-return valves are applicable only to those discharges which remain open during the normal operation of a ship. For discharges which are to be kept closed at sea, a single screw-dow valve operated from the deck is acceptable.

1.7 Table 16.1 provides the acceptable arrangements of scupper, inlets and discharges.

1.8 In manned machinery spaces, main and auxiliary sea inlets and discharges in connection with the operation of machinery may be controlled locally. The controls are to be readily accessible and be provided with indicators showing whether the valves are open or closed.

1.9 Discharge pipes originating at any level and penetrating the shell either more than 450 mm. below the freeboard deck or less than 650 mm. above the summer load line are to be provided with a non-return valve at the shell. This valve, unless required by item 1.1, may be omitted if the piping is of substantial thickness.

1.10 All shell fittings and the valves required by this rule are to be of steel, bronze or other approved ductile material. Valves of ordinary cast iron or similar material are not acceptable. All pipes to which this rule refers are to be of steel or other equivalent material to the satisfaction of **TL**.

2. Scuppers

2.1 A sufficient number of scuppers is to be fitted on all decks to provide effective drainage.

2.2 Scuppers led through the shell from enclosed superstructures used for the carriage of cargo are to be permitted only where the edge of the freeboard deck is not immersed when the ship heels 5º either way. In other cases the drainage is to be led inboard in accordance with the requirements of SOLAS in force.

2.3 Scuppers leading from superstructures or deckhouses not fitted with doors complying with the requirements of ICLL Reg. 12 are to be led overboard.

2.4 Scuppers led through the deck and shell are to comply with the requirements to material given for discharges.

2.5 Scuppers from spaces below the freeboard deck or spaces within closed superstructures may be led to bilges.

3. Scupper and Discharge Pipes

3.1 For scuppers and discharge pipes, where substantial thickness is not required:

3.1.1 For pipes having an external diameter equal to or less than 155 mm, the thickness is not to be less than 4.5 mm.

3.1.2 For pipes having an external diameter equal to or more than 230 mm, the thickness is not to be less than 6.0 mm. Intermediate sizes are to be determined by linear interpolation.

3.2 For scuppers and discharge pipes, where substantial thickness is required:

3.2.1 For pipes having an external diameter equal to or less than 80 mm, the thickness is not to be less than 7.0 mm.

3.2.2 For pipes having an external diameter of 180 mm, the thickness is not to be less than 10.0 mm.

3.2.3 For pipes having an external diameter equal to or more than 220 mm, the thickness is not to be less than 12.5 mm.

For items 3.1 and 3.2, intermediate sizes are to be determined by linear interpolation.

3.3 Scuppers and discharge pipes originating at any level and penetrating the shell either more than 450 mm below the freeboard deck or less than 600 mm above the summer load line are to be provided with a non-return valve at the shell. This valve, unless required by item 1.1, may be omitted if the piping is of substantial thickness (see items 3.1 and 3.2 above).

C. Freeing Ports

1. Definitions

1.1 Where bulwarks on weather portions of freeboard or superstructure decks form wells, ample provision is to be made for rapidly freeing the decks of water and for draining them.

2. Area of Freeing Ports

2.1 Except as provided in 2.2 to 2.4 the minimum freeing port area on each side of the ship for each well on the freeboard deck is to be that given by the following formulae in cases where the sheer in way of the well is standard or greater than standard:

$A = 0.7 + 0{,}035\,\ell$ [m^2] for $\ell \leq 20$ m.

$A = 0.07\,\ell$ [m^2] for $\ell > 20$ m.

ℓ = Length of bulwark in [m]

ℓ need in no case be taken as greater than 0.7 L.

The minimum area for each well on superstructure decks is to be one half of the area obtained by the formulae.

If the bulwark is more than 1.2 m in average height the required area is to be increased by 0.004 m^2 per meter of length of well for each 0.1 m. difference in height. If the bulwark is less than 0.9 m. in average height, the required area may be decreased by 0.004 m^2 per meter of length of well for each 0.1 m difference in height.

2.2 In ships with no sheer, the area calculated according to 2.1 is to be increased by 50 %. Where the sheer is less than the standard, the percentage is to be obtained by linear interpolation.

2.3 Where a ship fitted with a trunk does not comply with the requirements of Reg. 36 (1) (e) of ICLL or where continuous or substantially continuous hatchway side coamings are fitted between detached superstructures, the minimum area of the freeing port openings is to be determined from Table 16.2.

Table 16.2 Minimum area of freeing ports

Breadth of hatchway of trunk in relation to B in [%]	Area of freeing ports on each side in relation to the total area of the bulwark in [%] (1)
40 or less	20
75 or more	10
(1) *The area of freeing ports at intermediate breadths is to be obtained by linear interpolation.*	

2.4 In ships having superstructures on the freeboard deck or superstructure decks, which are open at either or both ends to wells formed by bulwarks on the open decks, adequate provisions for freeing the open spaces within the superstructures are to be provided.

3. Flush Deck Ships

3.1 On a flush deck ship with a substantial deckhouse amidships is considered to provide sufficient break to form two wells and each could be given the required freeing port area based upon the length of the “well”. It would not then be necessary to base the area upon 0.7 L. In defining a substantial deckhouse the breadth of the deckhouse should be at least 80% of the beam of the vessel, and the passageways along the side of the ship should not exceed 1.5 m. in width.

Where a screen bulkhead is fitted completely across the vessel, at the forward end of a midship deckhouse, this would effectively divide the exposed deck into wells and no limitation on the breadth of the deckhouse is

considered necessary in this case.

Wells on the raised quarterdecks are to be treated as being on freeboard decks.

3.2 With zero or little sheer on the exposed freeboard deck or an exposed superstructure deck the freeing port area should be spread along the length of the well.

4. Effectiveness of the Freeing Area

4.1 The effectiveness of the freeing port area in bulwarks required by item 2. depends on free flow across the deck of a ship. Where there is no free flow due to the presence of a continuous trunk or hatchway coaming, the freeing port area in bulwarks is calculated in accordance with item 2.3.

The free flow area on deck is the net area of the gaps between hatchways, and between hatchways and superstructures and deckhouses up to the actual height of the bulwark.

The freeing port area in bulwarks should be assessed in relation to the net flow area as follows:

Table 16.1 Acceptable arrangements of scuppers, inlets and discharges

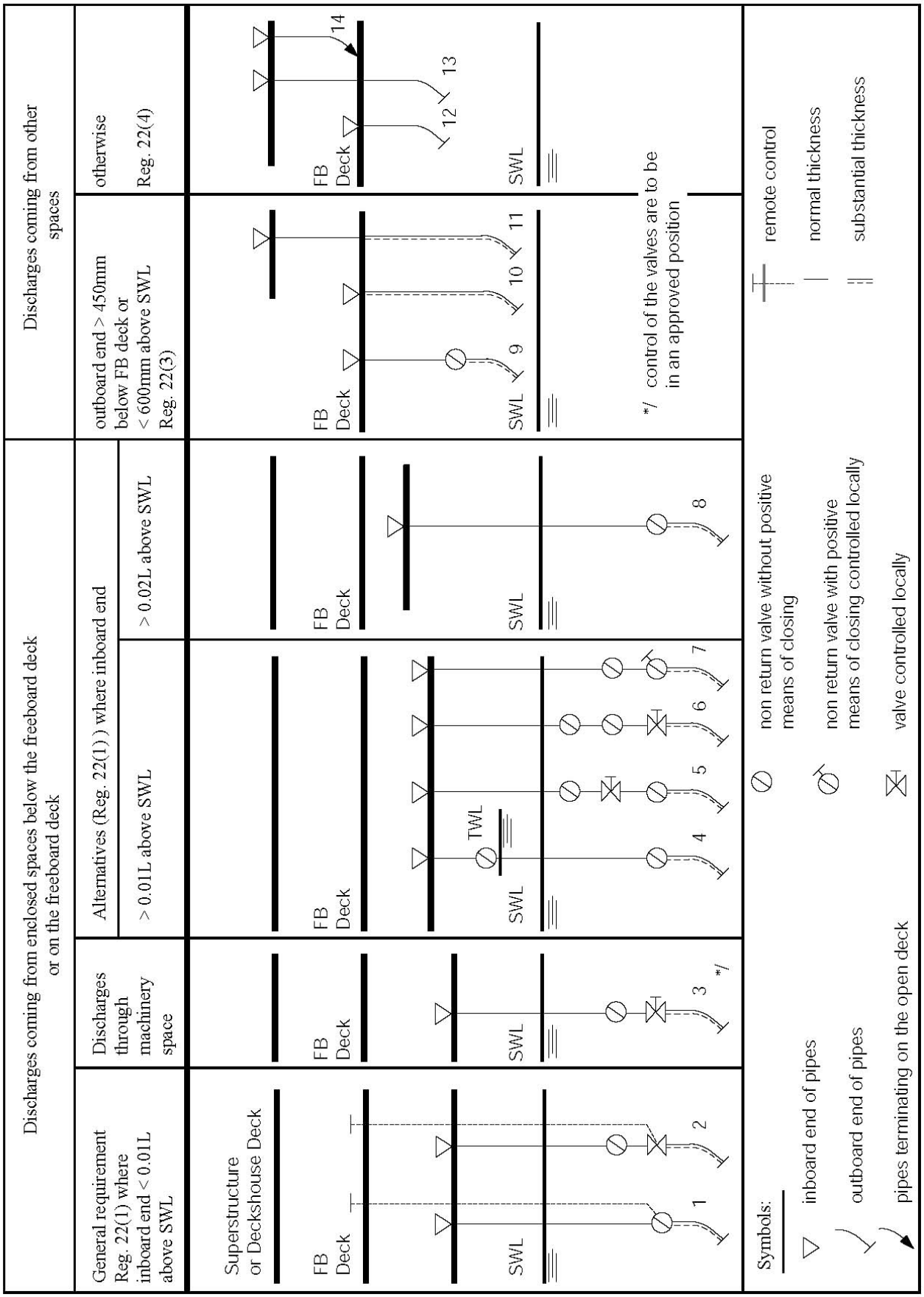

4.1.1 If the free flow area is not less than the freeing port area calculated from 2.3 as if the hatchway coamings were continuous, then the minimum freeing port area calculated from 2.1 and 2.2 should be deemed sufficient.

4.1.2 If the free flow area is equal to, or less than the area calculated from 2.1 and 2.2, minimum freeing port area in the bulwarks should be determined from 2.3.

4.1.3 If the free flow area is smaller than calculated from 2.3 but greater than calculated from 2.1 and 2.2, the minimum freeing port area in the bulwark should be determined from the following formula:

$$F = F_1 + F_2 - f_P \quad [m^2]$$

where;

F_1 is the minimum freeing port area calculated from 2.1 and 2.2

F_2 is the minimum freeing port area calculated from 2.3.

f_P is the total net area of passages and gaps between hatch ends and superstructures or deckhouses up to the actual height of the bulwark.

5. Position and Protection of Freeing Ports

5.1 The lower edges of the freeing ports are to be as near to the deck as practicable. Two thirds of the freeing port area required is to be provided in the half of the well nearest to the lowest point of the sheer curve. One-third of the freeing port are required is to be evenly spread along the remaining length of the well.

5.2 All such openings in the bulwarks are to be protected by rails or bars spaced approximately 230 mm. apart. If shutters are fitted to freeing ports, ample clearance is to be provided to prevent jamming. Hinges are to have pins or bearings of non-corrodible material.

D. Air Pipes

1. Air Pipes Extending Above the Freeboard or Superstructure Decks

1.1 Where air pipes to ballast and other tanks extend above the freeboard or superstructure decks, the exposed parts of the pipes is to be of substantial construction; the height from the deck to the point where water may have access below is to be at least 760 mm. on the freeboard deck and 450 mm. on the superstructure deck.

1.2 Where these heights may interfere with the working of the ship, a lower height may be approved, provided that **TL** is satisfied that the closing arrangements and other circumstances justify a lower height.

2. Air Pipe Closing Arrangements

2.1 Where required by Regulation 20 of ICLL, air pipe closing devices are to be weathertight. Closing devices are to be automatic if, while the vessel is at its draught corresponding to summer load line, the openings of the air pipes to which these closures are fitted submerge at angles up to 40º or up to a lesser angle which may be agreed on the basis of stability requirements.

Pressure vacuum valves (PV valves) may, however, be accepted on tankers.

Wooden plugs and trailing canvas are not to be accepted in position 1 and position 2.

2.2 For ships assigned timber freeboards the air pipes should be provided with automatic closing appliances.

3. Minimum Wall Thickness of Air Pipes

The thickness of air pipes in position 1 and 2 leading to spaces below the freeboard deck or to spaces within closed superstructures is not to be less than given in the following:

3.1 For pipes having external diameter equal to or less than 80 mm, thickness should not be less than 6 mm.

3.2 For pipes having external diameter equal to or more than 165 mm, thickness should not be less than 8.5 mm.

Intermediate sizes should be determined by linear interpolation.

4. Strength Requirements for Fore Deck Air Pipes

4.1 Application

The air pipes in all ship types of seagoing service of length 80 m or more located on the exposed deck over the forward 0.25 L, where the height of the exposed deck in way of the item is less than 0.1L or 22 m. above the summer load waterline, whichever is the lesser, are to comply with the following requirements.

Exempted from these requirements are air pipes of the cargo tank venting systems and the inert gas systems of tankers.

4.2 Applied loading

4.2.1 The pressure p [kN/m^2] acting on air pipes and their closing devices may be calculated from:

$$p = 0.5 \cdot \rho \cdot V^2 \cdot C_d \cdot C_s \cdot C_p$$

ρ = Density of sea water [1.025 t/m^3]

V = Velocity of water over the fore deck

= 13.5 m/s for $d \le 0.5\ d_1$

= $13.5\sqrt{2 \cdot \left(1 - \frac{d}{d_1}\right)}$ m/s for $0.5 \cdot d_1 < d < d_1$

d = distance from summer load waterline to exposed deck

d_1 = 0.1L or 22 m whichever is lesser

C_d = Shape coefficient

= 0.5 for pipes

= 0.8 for an air pipe of cylindrical form with its axis in the vertical direction

= 1.3 for air pipes in general

C_s = Slamming coefficient

= 3.2

C_p = Protection coefficient

= 0.7 for pipes located immediately behind a breakwater or forecastle

= 1.0 elsewhere and immediately behind a bulwark

4.2.2 Forces acting in the horizontal direction on the pipe and its closing device may be calculated from 4.2.1 using the largest projected area of each component.

4.3 Strength requirements for air pipes and their closing devices

4.3.1 Bending moments and stresses in air pipes are to be calculated at critical positions: at penetration pieces, at weld or flange connections, at toes of supporting brackets. Bending stresses in the net section are not to exceed $0.8 \cdot \sigma_y$, where σ_y is the specified minimum yield stress or 0.2 % proof stress of the steel at room temperature. Irrespective of corrosion protection, a corrosion addition to the net section of 2.0 mm. is then to be applied.

4.3.2 For standard air pipes of 760 mm. height closed by heads of not more than the tabulated projected area, pipe thicknesses and bracket heights are specified in Table 16.3. Where brackets are required, three or more radial brackets are to be fitted. Brackets are to be of gross thickness 8 mm or more, of minimum length 100 mm, and height according to Table 16.3. but need not extend over the joint flange for the head. Bracket toes at the deck are to be suitably supported.

4.3.3 For other configurations, loads, according to 4.2 are to be applied, and means of support determined in order to comply with the requirements of 4.3.1. Brackets, where fitted, are to be of suitable thickness and length according to their height. Pipe thickness is not to be taken less than as required in 3.

4.3.4 All component part and connections of the air pipe are to be capable of withstanding the loads defined in 4.2.1

E. Ventilators

1. General

1.1 Ventilators in position 1 or 2 to spaces below freeboard deck or decks of enclosed superstructures are to have coamings of steel or other equivalent material, substantially constructed and efficiently connected to the deck. Ventilators in position 1 shall are to have coamings of a height of at least 900 mm above the deck; in position 2 are to be of a height at least 760 mm. above the deck. Where the coaming of any ventilator exceeds 900 mm in height it is to be specially supported.

1.2 Ventilators passing through superstructures other than enclosed superstructures are to have substantially constructed coamings of steel or other equivalent material at the freeboard deck.

1.3 In exposed locations, the height of coamings may be increased to the satisfaction of **TL**.

2. Ventilator Closing Arrangements

2.1 Ventilator in position 1 the coamings of which extend to more than 4.5 m above the deck, and in position 2 the coamings of which extend to more than 2.3 m above the deck, need not be fitted with closing arrangements unless specifically required by **TL**.

2.2 Except as provided in 2.1, ventilator openings are to be provided with weathertight closing appliances

2.3 Where required, weathertight closing appliances for all ventilators in position 1 and 2 are to be of steel or other equivalent materials.

Wood plugs and canvas covers are not acceptable in these positions.

2.4 The ventilation of machinery spaces shall be according to the principles laid down in SOLAS Regulation II-1/35 and supplied through suitably protected openings arranged in such a way that they can be used in all weather conditions, taking into account Reg.17(3) and Reg.19 of the 1966 Load Line Convention as amended by the Protocol of 1988.

The machinery spaces are those defined in SOLAS Regulation II-1/3.16.

3. Minimum Wall Thickness of Ventilator Coamings

The thickness of ventilator coamings in position 1 and 2 leading to spaces below the freeboard deck or to spaces within closed superstructures is not to be less than given in the following:

3.1 For coamings having external diameter equal to or less than 80 mm, thickness should not be less than 6 mm.

3.2 For coamings having external diameter equal to or more than 165 mm, thickness should not be less than 8.5 mm.

Intermediate sizes should be determined by linear interpolation.

4. Machinery Space and Emergency Generator Room Ventilator Coaming Heights

4.1 In general, ventilators necessary to continuously supply the machinery space and, on demand, immediately supply the emergency generator room should have coamings which comply with Regulation 19 (3) of ICLL 66, without having to fit weathertight closing appliances.

4.2 However, where due to vessel size and arrangement this is not practicable, lesser heights for machinery space and emergency generator room ventilator coamings may be accepted with provisions of weathertight closing appliances in accordance with regulation 19 (4) of ICLL 66 in combination with other suitable arrangements to ensure an uninterrupted, adequately supply of ventilation to these spaces.

5. Strength Requirements for Fore Deck Ventilators

5.1 Application

The ventilators in all ship types of seagoing service of length 80 m or more located on the exposed deck over the forward 0.25 L, where the height of the exposed deck in way of the item is less than 0.1 L or 22 m. above the

summer load waterline, whichever is the lesser, are to comply with the following requirements.

5.2 Applied loading

5.2.1 The pressure p [kN/m^2] acting on ventilator pipes and their closing devices may be calculated from:

$$p = 0.5 \cdot \rho \cdot V^2 \cdot C_d \cdot C_s \cdot C_p$$

ρ = Density of sea water [1.025 t/m^3]

V = Velocity of water over the fore deck

= 13.5 m/s for $d \le 0.5\ d_1$

= $13.5\sqrt{2 \cdot \left(1 - \frac{d}{d_1}\right)}$ m/s for $0.5 \cdot d_1 < d < d_1$

d = distance from summer load waterline to exposed deck

d_1 = 0.1L or 22 m whichever is lesser

C_d = Shape coefficient

= 0.5 for pipes

= 0.8 for an ventilator head of cylindrical form with its axis in the vertical direction

= 1.3 for ventilator heads in general

C_s = Slamming coefficient

= 3.2

C_p = Protection coefficient

= 0.7 for ventilator heads located immediately behind a breakwater or forecastle

= 1.0 elsewhere and immediately behind a bulwark

5.2.2 Forces acting in the horizontal direction on the ventilator pipe and its closing device may be calculated from 5.2.1 using the largest projected area of each component.

5.3 Strength requirements for ventilator pipes and their closing devices

5.3.1 Bending moments and stresses in ventilator pipes are to be calculated at critical positions: at penetration pieces, at weld or flange connections, at toes of supporting brackets. Bending stresses in the net section are not to exceed $0.8 \cdot \sigma_y$, where σ_y is the specified minimum yield stress or 0.2 % proof stress of the steel at room temperature. Irrespective of corrosion protection, a corrosion addition to the net section of 2.0 mm. is then to be applied.

5.3.2 For standard ventilators of 900 mm. height closed by heads of not more than the tabulated projected area, pipe thicknesses and bracket heights are specified in Table 16.4. Brackets, where required are to be as indicated in 4.3.2.

5.3.3 For ventilator of height greater than 900 mm, brackets or alternative means of support are to be fitted. Pipe thickness is not to be taken less than as indicated in 3.

5.3.4 All component part and connections of the ventilator are to be capable of withstanding the loads defined in 5.2.1.

5.3.5 Rotating type mushroom ventilator heads are unsuitable for application in the areas defined in 5.1.

F. Protection of the Crew

1. Passageways, Walkways and Gangways

1.1 Satisfactory means for safe passage (in the form of guard rails, life lines, gangways or under deck passages, etc.) are to be provided for the protection of crew in getting to and from their quarters, the machinery space and any other spaces used in the essential operation of the ship.

1.2 The protection of crew should be provided at least by one of the means denoted in the Table 16.5.

1.3 Acceptable arrangements referred to in Table 16.5 are defined as follows:

Table 16.3 760 mm. Air pipe thickness and bracket standards

Nominal pipe diameter [mm]	Minimum fitted (1) gross thickness [mm]	Maximum projected area of head [cm^2]	Height (2) of brackets [mm]
65A	6.0	-	480
80A	6.3	-	460
100A	7.0	-	380
125A	7.8	-	300
150A	8.5	-	300
175A	8.5	-	300
200A	8.5 **(3)**	1900	300 **(3)**
250A	8.5 **(3)**	2500	300 **(3)**
300A	8.5 **(3)**	3200	300 **(3)**
350A	8.5 **(3)**	3800	300 **(3)**
400 A	8.5 **(3)**	4500	300 **(3)**

(1) *See IACS Unified Interpretation LL 36(c).*

(2) *Brackets see 4.3.2 need not extend over the joint flange for the head.*

(3) *Brackets are required where the as fitted (gross) thickness is less than 10.5 mm, or where the tabulated projected head area is exceeded.*

Note:

For other air pipe heights, the relevant requirements of 4.3 are to be applied.

1.3.1 A well lighted and ventilated under-deck passageway clear opening 0.8 m wide, 2.0 m high as close as practicable to the freeboard deck, connecting and providing access to the locations in question.

1.3.2 A permanent and efficiently constructed gangway fitted at or above the level of the superstructure deck on or as near as practicable to the centre line of the ship, providing a continuous platform at least 0.6 m in width and a non-slip surface, with guard rails extending on each side throughout its length. Guard rails are to be at least 1 m high with courses as required in 2.2, and supported by stanchions spaced not more than 1.5 m; a foot-stop is to be provided.

1.3.3 A permanent walkway at least 0.6 m in width fitted at freeboard deck level consisting of two rows of guard rails with stanchions spaced not more than 3 m. The number of courses of rails and their spacing are to be as required by 2.2. On type B ships, hatchway coamings not less than 0.6 m in height may be regarded as forming one side of the walkway, provided that between the hatches two rows of guard rails are fitted.

1.3.4 A 10 mm diameter wire rope lifeline supported by stanchions about 10 m. apart, or

A single hand rail or wire rope attached to hatch coamings, continued and adequately supported between hatchways.

1.3.5 A permanent and efficiently constructed gangway fitted at or above the level of the superstructure deck on or as near as practicable to the centre line of the ship:

- Located so as not to hinder easy access across the working areas of the deck;
- Providing a continuous platform at least 1.0 m in width;
- Constructed of fire resistant and non-slip material;
- Fitted with guard rails extending on each side throughout its length; guard rails should be at least 1.0 m high with courses as required by 2.2 and supported by stanchions spaced not more than 1.5 m;

Provided with a foot stop on each side;

Having openings, with ladders where appropriate, to and from the deck. Openings should not be more than 40 m. apart;

Table 16.4 900 mm. ventilator pipe thickness and bracket standards

Nominal pipe diameter [mm]	Minimum fitted gross thickness [mm]	Maximum projected area of head [cm^2]	Height of brackets [mm]
80 A	6.3	-	460
100 A	7.0	-	380
150 A	8.5	-	300
200 A	8.5	550	-
250 A	8.5	880	-
300 A	8.5	1200	-
350 A	8.5	2000	-
400 A	8.5	2700	-
450 A	8.5	3300	-
500 A	8.5	4000	-
Note: *For other ventilator heights, the relevant requirements of 5.3 are to be applied.*			

Having shelters of substantial construction set in way of the gangway at intervals not exceeding 45 m if the length of the exposed deck to be traversed exceeds 70 m. Every such shelter should be capable of accommodating at least one person and be so constructed as to afford weather protection on the forward, port and starboard sides.

1.3.6 A permanent and efficiently constructed walkway fitted at freeboard deck level on or as near as practicable to the centre line of the ship having the same specifications as those for a permanent gangway listed in 1.3.5 except for foot-stops.

On type B ships (certified for the carriage of liquids in bulk), with a combined height of hatch coaming and fitted hatch cover of together not less than 1 m in height the hatchway coamings may be regarded as forming one side of the walkway, provided that between the hatchways two rows of guard rails are fitted.

Alternative transverse locations for 1.3.3, 1.3.4 and 1.3.6 above, where appropriate:

(a) At or near centre line of ship; or fitted on hatchways at or near centre line of ship;

(b) Fitted on each side of the ship;

(c) Fitted on each side of the ship, provisions being made for fitting on either side;

(d) Fitted on one side only;

(e) Fitted on each side of the hatchways as near to the centre line as practicable.

Notes:

1. In all cases where wire ropes are fitted, adequate devices are to be provided to ensure their tautness.

2. Wire ropes may only be accepted in lieu of guard rails in special circumstances and then only in limited lengths.

3. Lengths of chain may only be accepted in lieu of guard rails if fitted between two fixed stanchions.

4. Where stanchions are fitted, every 3rd stanchion is to be supported by a bracket or stay.

5. Removable or hinged stanchions are to be capable of being locked in the upright position.

6. A means of passage over obstructions, if any, such as pipes or other fittings of a permanent nature, should be provided.

7. Generally, the width of gangway or deck-level walkway should not exceed 1.5 m.

2. Guard Rails

2.1 Efficient guard rails or bulwarks are to be fitted to all exposed parts of the freeboard and superstructure deck. The height of the bulwarks or guard rails is to be at least 1 m from the deck, provided that where this height would interfere with the normal operation of the ship, a lesser height may be approved if **TL** is satisfied that adequate protection is provided.

Note: *A guard rail should also be required for first tier deckhouses and for superstructures' ends.*

2.2 The opening below the lowest course of the guard rails is not to exceed 230 mm. The other courses are to be not more than 380 mm. In case of ships with rounded gunwales the guard rail supports are to be placed on the flat of the deck. In other locations, guard rails with at least two courses are to be fitted. Guard rails are to comply with the following provisions:

2.2.1 Fixed, removable or hinged stanchions are to be fitted about 1.5 m apart.

2.2.2 At least every third stanchion is to be supported by a bracket or stay.

2.2.3 Wire ropes may only be accepted in lieu of guard rails in special circumstances and then only in limited lengths.

2.2.4 Lengths of chain may only be accepted in lieu of guard rails if they are fitted between two fixed stanchions and/or bulwarks.

2.2.5 Wires are to be made taut by means of turnbuckles.

2.2.6 Removable or hinged stanchions are to be capable of being locked in the upright position.

3. Pilot Transfer Arrangements

3.1 General

Ship designers are encouraged to consider all aspects of pilot transfer arrangements at an early stage in design. Equipment designers and manufacturers are similarly encouraged, particularly with respect to the provisions of 3.2.1.2, 3.3.1 and 3.4.3.

3.2 Pilot ladders

A pilot ladder should be certified by the manufacturer as complying with this section or with the requirements of an international standard acceptable to the Organization **(3).**

3.2.1 Position and construction

3.2.1.1 The securing strong points, shackles and securing ropes should be at least as strong as the side ropes specified in 3.2.2.

3.2.1.2 The steps of the pilot ladders should comply with the following requirements:

- If made of hardwood, they should be made in one piece, free of knots;
- If made of material other than hardwood, they should be of equivalent strength, stiffness and durability to the satisfaction of **TL**;
- The four lowest steps may be of rubber of sufficient strength and stiffness or other material to the satisfaction of **TL**;
- They should have an efficient non-slip surface;
- They should be not less than 400 mm between the side ropes, 115 mm wide and 25 mm in depth, excluding any non-slip device or grooving;
- They should be equally spaced not less than 310 mm or more than 350 mm apart; and
- They should be secured in such a manner that each will remain horizontal.

3.2.1.3 No pilot ladder should have more than two replacement steps which are secured in position by a method different from that used in the original construction of the ladder, and any steps so secured should be replaced as soon as reasonably practicable by steps secured in position by the method used in the original construction of the pilot ladder.

When any replacement step is secured to the side ropes of the pilot ladder by means of grooves in the sides of the step, such grooves should be in the longer sides of the step.

3.2.1.4 Pilot ladders with more than five steps should have spreader steps not less than 1.8 m long provided at such intervals as will prevent the pilot ladder from twisting.

(3) *Refer to the recommendations by the International Organization for Standardization, in particular publication ISO 799, Ships and marine technology – Pilot ladders*

The lowest spreader step should be the fifth step from the bottom of the ladder and the interval between any spreader step and the next should not exceed nine steps.

3.2.1.5 When a retrieval line is considered necessary to ensure the safe rigging of a pilot ladder, the line should be fastened at or above the last spreader step and should lead forward. The retrieval line should not hinder the pilot nor obstruct the safe approach of the pilot boat.

3.2.1.6 A permanent marking should be provided at regular intervals (e.g. 1 m) throughout the length of the ladder consistent with ladder design, use and maintenance in order to facilitate the rigging of the ladder to the required height.

3.2.2 Ropes

3.2.2.1 The side ropes of the pilot ladder should consist of two uncovered ropes not less than 18 mm in diameter on each side and should be continuous, with no joints and have a breaking strength of at least 24 KN per side rope. The two side ropes should each consist of one continuous length of rope, the midpoint half-length being located on a thimble large enough to accommodate at least two passes of side rope.

3.2.2.2 Side ropes should be made of manila or other material of equivalent strength, durability, elongation characteristics and grip which has been protected against actinic degradation and is satisfactory to **TL**.

3.2.2.3 Each pair of side ropes should be secured together both above and below each step with a mechanical clamping device properly designed for this purpose, or seizing method with step fixtures (chocks or widgets), which holds each step level when the ladder is hanging freely. The preferred method is seizing. **(4)**

3.3 Transfer arrangements

3.3.1 Arrangements shall be provided to enable the pilot to embark and disembark safely on either side of the ship.

3.3.2 In all ships, where the distance from sea level to the point of access to, or egress from, the ship exceeds 9 m, and when it is intended to embark and disembark pilots by means of the accommodation ladder, or other equally safe and convenient means in conjunction with a pilot ladder, the ship shall carry such equipment on each side, unless the equipment is capable of being transferred for use on either side.

3.3.3 Safe and convenient access to, and egress from, the ship shall be provided by either: **(5)**

3.3.3.1 A pilot ladder requiring a climb of not less than 1.5 m and not more than 9 m above the surface of the water so positioned and secured that:

It is clear of any possible discharges from the ship;

- It is within the parallel body length of the ship and, as far as is practicable, within the mid-ship half length of the ship;

- Each step rests firmly against the ship's side; where constructional features, such as rubbing bands, would prevent the implementation of this provision, special arrangements shall, to the satisfaction of **TL**, be made to ensure that persons are able to embark and disembark safely;

- The single length of pilot ladder is capable of reaching the water from the point of access to, or egress from, the ship and due allowance is made for all conditions of loading and trim of the ship, and for an adverse list of 15°; the securing strong point, shackles and securing ropes shall be at least as strong as the side ropes; or

3.3.3.2 An accommodation ladder in conjunction with the pilot ladder (i.e. a combination arrangement), or other equally safe and convenient means, whenever the distance from the surface of the water to t he point of access to the ship is more than 9 m. The accommodation ladder shall be sited leading aft.

(4) *Refer to the recommendations by the International Organization for Standardization, in particular publication ISO 799, Ships and marine technology — Pilot ladders, part 4.3a and part 3*

(5) *See IACS UI SC257.*

When in use, means shall be provided to secure the lower platform of the accommodation ladder to the ship's side, so as to ensure that the lower end of the accommodation ladder and the lower platform are held firmly against the ship's side within the parallel body length of the ship and, as far as is practicable, within the mid-ship half length and clear of all discharges.

When a combination arrangement is used for pilot access, means shall be provided to secure the pilot ladder and manropes to the ship's side at a point of nominally 1.5 m above the bottom platform of the accommodation ladder. In the case of a combination arrangement using an accommodation ladder with a trapdoor in the bottom platform (i.e. embarkation platform), the pilot ladder and man ropes shall be rigged through the trapdoor extending above the platform to the height of the handrail.

3.4 Accommodation ladders used in conjunction with pilot ladders

3.4.1 Arrangements which may be more suitable for special types of ships may be accepted, provided that they are equally safe.

3.4.2 The length of the accommodation ladder should be sufficient to ensure that its angle of slope does not exceed 45°. In ships with large draft ranges, several pilot ladder hanging positions may be provided, resulting in lesser angles of slope. The accommodation ladder should be at least 600 mm in width.

3.4.3 The lower platform of the accommodation ladder should be in a horizontal position and secured to the ship's side when in use. The lower platform should be a minimum of 5 m above sea level.

3.4.4 Intermediate platforms, if fitted, should be self-levelling. Treads and steps of the accommodation ladder should be so designed that an adequate and safe foothold is given at the operative angles.

3.4.5 The ladder and platform should be equipped on both sides with stanchions and rigid handrails, but if handropes are used they should be tight and properly secured. The vertical space between the handrail or handrope and the stringers of the ladder should be securely fenced.

3.4.6 The pilot ladder should be rigged immediately adjacent to the lower platform of the accommodation ladder and the upper end should extend at least 2 m above the lower platform. The horizontal distance between the pilot ladder and the lower platform should be between 0.1 and 0.2 m.

3.4.7 If a trapdoor is fitted in the lower platform to allow access from and to the pilot ladder, the aperture should not be less than 750 mm x 750 mm. The trapdoor should open upwards and be secured either flat on the embarkation platform or against the rails at the aft end or outboard side of the platform and should not form part of the handholds. In this case the after part of the lower platform should also be fenced as specified in 3.4.5 and the pilot ladder should extend above the lower platform to the height of the handrail and remain in alignment with and against the ship's side.

3.4.8 Accommodation ladders, together with any suspension arrangements or attachments fitted and intended for use in accordance with this recommendation, should be to the satisfaction of **TL**. **(6)**

3.5 Access to deck

Means should be provided to ensure safe, convenient and unobstructed passage for any person embarking on, or disembarking from, the ship between the head of the pilot ladder, or of any accommodation ladder, and the ship's deck; such access should be gained directly by a platform securely guarded by handrails. Where such passage is by means of:

- A gateway in the rails or bulwark, adequate handholds should be provided at the point of embarking on or disembarking from the ship on each side which should be not less than 0.7 m or more than 0.8 m apart. Each handhold should be rigidly secured to the ship's structure at or near its base and also at a higher point, not less than 32 mm in diameter and extend not less than 1.2 m above the top of the bulwarks. Stanchions or handrails should not be attached to the bulwark ladder;

(6) *Refer to SOLAS regulation II-1/3-9 concerning accommodation ladders.*

- A bulwark ladder should be securely attached to the ship to prevent overturning. Two handhold stanchions should be fitted at the point of embarking on or disembarking from the ship on each side which should be not less than 0.7 m or more than 0.8 m apart. Each stanchion should be rigidly secured to the ship's structure at or near its base and also at a higher point, should be not less than 32 mm in diameter and should extend not less than 1.2 m above the top of the bulwarks. Stanchions or handrails should not be attached to the bulwark ladder.

3.6 Safe approach of the pilot boat

Where rubbing bands or other constructional features might prevent the safe approach of a pilot boat, these should be cut back to provide at least 6 m of unobstructed ship's side. Specialized offshore ships less than 90 m or other similar ships less than 90 m for which a 6 m gap in the rubbing bands would not be practicable, as determined by TL, do not have to comply with this requirement. In this case, other appropriate measures should be taken to ensure that persons are able to embark and disembark safely.

3.7 Installation of pilot ladder winch reels

3.7.1 Point of access

3.7.1.1 When a pilot ladder winch reel is provided it should be situated at a position which will ensure persons embarking on, or disembarking from, the ship between the pilot ladder and the point of access to the ship, have safe, convenient and unobstructed access to or egress from the ship.

3.7.1.2 The point of access to or egress from the ship may be by a ship's side opening, an accommodation ladder when a combination arrangement is provided, or a single section of pilot ladder.

3.7.1.3 The access position and adjacent area should be clear of obstructions, including the pilot ladder winch reel, for distances as follows:

- A distance of 915 mm in width measured longitudinally;
- A distance of 915 mm in depth, measured from the ship's side plating inwards; and
- A distance of 2200 mm in height, measured vertically from the access deck.

3.7.2 Physical positioning of pilot ladder winch reels

3.7.2.1 Pilot ladder winch reels are generally fitted on the ship's upper (main) deck or at a ship's side opening which may include side doors, gangway locations or bunkering points. Winch reels fitted on the upper deck may result in very long pilot ladders.

3.7.2.2 Pilot ladder winch reels which are fitted on a ship's upper deck for the purpose of providing a pilot ladder which services a ship side opening below the upper deck or, alternatively, an accommodation ladder when a combination arrangement is provided should:

3.7.2.2.1 Be situated at a location on the upper deck from which the pilot ladder is able to be suspended vertically, in a straight line, to a point adjacent to the ship side opening access point or the lower platform of the accommodation ladder;

3.7.2.2.2 Be situated at a location which provides a safe, convenient and unobstructed passage for any person embarking on, or disembarking from, the ship between the pilot ladder and the place of access on the ship;

3.7.2.2.3 Be situated so that safe and convenient access is provided between the pilot ladder and the ship's side opening by means of a platform which should extend outboard from the ship's side for a minimum distance of 750 mm, with a longitudinal length of a minimum of 750 mm. The platform should be securely guarded by handrails;

3.7.2.2.4 Safely secure the pilot ladder and manropes to the ship's side at a point on the ships side at a distance of 1500 mm above the platform access point to the ship side opening or the lower platform of the accommodation ladder; and

3.7.2.2.5 If a combination arrangement is provided,

have the accommodation ladder secured to the ship's side at or close to the lower platform so as to ensure that the accommodation ladder rests firmly against the ship's side.

3.7.2.3 Pilot ladder winch reels fitted inside a ship's side opening should:

- Be situated at a position which provides a safe, convenient and unobstructed passage for any person embarking on, or disembarking from, the ship between the pilot ladder and the place of access on the ship;

- Be situated at a position which provides an unobstructed clear area with a minimum

- length of 915 mm and minimum width of 915 mm and minimum vertical height of 2200 mm; and

- If situated at a position which necessitates a section of the pilot ladder to be partially secured in a horizontal position on the deck so as to provide a clear access as described above, then allowance should be made so that this section of the pilot ladder may be covered with a rigid platform for a minimum distance of 915 mm measured horizontally from the ship's side inwards.

3.7.3 Handrails and handgrips

Handrails and handgrips should be provided in accordance with section 5 to assist the pilot to safely transfer between the pilot ladder and the ship, except as noted in 3.7.2.2.3 for arrangements with platforms extending outboard. The horizontal distance between the handrails and/or the handgrips should be not less than 0.7 m or more than 0.8 m apart.

3.7.4 Securing of the pilot ladder

Where the pilot ladder is stowed on a pilot ladder winch reel which is located either within the ship's side opening or on the upper deck:

- The pilot ladder winch reel should not be relied upon to support the pilot ladder when the pilot ladder is in use;

- The pilot ladder should be secured to a strong point, independent of the pilot ladder winch reel; and

- The pilot ladder should be secured at deck level inside the ship side opening or, when located on the ship's upper deck, at a distance of not less than 915 mm measured horizontally from the ship's side inwards.

3.7.5 Mechanical securing of pilot ladder winch reel

3.7.5.1 All pilot ladder winch reels should have means of preventing the winch reel from being accidentally operated as a result of mechanical failure or human error.

3.7.5.2 Pilot ladder winch reels may be manually operated or, alternatively, powered by either electrical, hydraulic or pneumatic means.

3.7.5.3 Manually operated pilot ladder winch reels should be provided with a brake or other suitable arrangements to control the lowering of the pilot ladder and to lock the winch reel in position once the pilot ladder is lowered into position.

3.7.5.4 Electrical, hydraulic or pneumatically driven pilot ladder winch reels should be fitted with safety devices which are capable of cutting off the power supply to the winch reel and thus locking the winch reel in position.

3.7.5.5 Powered winch reels should have clearly marked control levers or handles which may be locked in a neutral position.

3.7.5.6 A mechanical device or locking pin should also be utilized to lock powered winch reels.

3.8 Mechanical pilot hoists

Mechanical pilot hoists shall not be used.

Table 16.5 Protection of the crew

Type of ship	Locations of access in ship	Assigned summer freeboard	Acceptable arrangements according to type of freeboard assigned:			
			Type A	Type B-100	Type B-60	Type B&B+
All ships other than Oil Tankers(*), Chemical Tankers (*) and Gas Carriers (*)	**1.1 Access to Midship Quarters** 1.1.1. Between poop and bridge, or 1.1.2. Between poop and deckhouse containing living accommodation or navigating equipment, or both.	≤ 3000 mm.	1.3.1 1.3.2 1.3.5	1.3.1 1.3.2 1.3.5	1.3.1 1.3.2 1.3.3(a) 1.3.5 1.3.6(a)	1.3.1 1.3.2 1.3.3(a) 1.3.3(b) 1.3.3(d) 1.3.4(a) 1.3.4(b) 1.3.4(c) 1.3.5 1.3.6(a) 1.3.6(b) 1.3.6(d)
		> 3000 mm.	1.3.1 1.3.2 1.3.5	1.3.1 1.3.2 1.3.5	1.3.1 1.3.2 1.3.3(a) 1.3.3(b) 1.3.5 1.3.6(a) 1.3.6(b)	
	1.2 Access to Ends 1.2.1. Between poop and bow (if there is no bridge) 1.2.2. Between bridge and bow, or 1.2.3. Between a deckhouse containing living accommodation or navigating equipment, or both, and bow, or 1.2.4. In the case of a flush deck vessel, between crew accommodation and the forward and after ends of ship	≤ 3000 mm.	1.3.1 1.3.2 1.3.3(a) 1.3.5 1.3.6(a)	1.3.1 1.3.2 1.3.3(a) 1.3.3(b) 1.3.5 1.3.6(a) 1.3.6(b)	1.3.1 1.3.2 1.3.3(a) 1.3.3(b) 1.3.5 1.3.6(a) 1.3.6(b)	
		> 3000 mm.	1.3.1 1.3.2 1.3.3(a) 1.3.4(a) 1.3.5 1.3.6(a)	1.3.1 1.3.2 1.3.3(a) 1.3.3(b) 1.3.4(a) 1.3.4(b) 1.3.5 1.3.6(a) 1.3.6(b)	1.3.1 1.3.2 1.3.3(a) 1.3.3(b) 1.3.3(d) 1.3.4(a) 1.3.4(b) 1.3.4(c) 1.3.5 1.3.6(a) 1.3.6(b) 1.3.6(d)	
Oil Tankers(*), Chemical Tankers (*) and Gas Carriers (*)	**2.1 Access to bow** 2.1.1. Between poop and bow, or 2.1.2. Between a deckhouse containing living accommodation or navigating equipment, or both and bow, or 2.1.3. In the case of a flush deck ship, between crew accommodation and the forward end of ship	≤ (A_f + H_s) *(**)*	1.3.1 1.3.5 1.3.6(a) 1.3.6(e)			
		> (A_f + H_s) *(**)*	1.3.1 1.3.5 1.3.6(a) 1.3.6(b)			
	2.2 Access to After End In the case of a flush deck ship, between crew accommodation and the after end of ship	As required in 1.2.4 for other types of ships				

(*) *Oil Tankers, Chemical Tankers and Gas Carriers as defined in SOLAS regulations II-1/2.12, VII/8.2 and VII/11.2, respectively.*

(**) A_f *= The minimum summer freeboard calculated as type "A" ship regardless of the type freeboard actually assigned.*
H_s *= The standard height of superstructure as defined in ICLL Regulation 33.*

Note: *Deviations from some or all of these requirements or alternative arrangements for such cases as ships with very high gangways (i.e. certain gas carriers) may be allowed subject to agreement on a case-by-case basis with the relevant flag Administration.*

G. Means of Access to the Cargo Areas of Oil Tankers and Bulk Carriers (7)

1. Means of Access to Cargo and Other Spaces

1.1 Each space within the cargo area are to be provided with a permanent means of access to enable, throughout the life of a ship, overall and close-up inspection and thickness measurements of the ship's structure.

1.2 Where a permanent means of access may be susceptible to damage during normal cargo loading and unloading operations or where it is impracticable to fit permanent means of access **TL** may allow, in lieu thereof, the provision of movable or portable means of access, provided that the means of attaching, rigging, suspending or supporting the portable means of access forms a permanent part of the ship's structure. All portable equipment is to be capable of being readily erected or deployed by ship's personnel.

1.3 The construction and materials of all means of access and their attachment to the ship's structure is to be to the satisfaction of **TL**.

2. Safe Access to Cargo Holds, Cargo Tanks, Ballast Tanks and Other Spaces

2.1 Safe access to cargo holds, cofferdams, ballast tanks, cargo tanks and other spaces in the cargo area is to be direct from the open deck and such as to ensure their complete inspection. Safe access double bottom spaces may be from a pump-room, deep cofferdam, pipe tunnel, cargo hold, double hull space or similar compartment not intended for the carriage of oil or hazardous cargoes.

2.2 Tanks, and subdivisions of tanks, having a length of 35 m. or more, is to be fitted with at least two access hatchways and ladders, as far apart as practicable. Tanks less than 35 m. in length is to be served by at least one access hatchway and ladder. When a tank is subdivided by one or more swash bulkheads or similar obstructions which do not allow ready means of access to the other parts of the tank, at least two hatchways and ladders are to be fitted.

2.3 Each cargo hold is to be provided with at least two means of access as far apart as practicable. In general, these accesses should be arranged diagonally, for example one access near the forward bulkhead on the port side, the other one near the aft bulkhead on the starboard side.

3. Definitions

3.1 Rung

Rung means the step of a vertical ladder or step on the vertical surface.

3.2 Tread

Tread means the step of an inclined ladder or step for the vertical access opening.

3.3 Flight of an inclined ladder

Flight of an inclined ladder means the actual stringer length of an inclined ladder. For vertical ladders, it is the distance between the platforms.

3.4 Stringer

Stringer means:

- The frame of a ladder; or
- The stiffened horizontal plating structure fitted on the side shell, transverse bulkheads and/or longitudinal bulkheads in the space. For the purpose of ballast tanks of less than 5 m. width forming double side spaces, the horizontal plating structure is credited as a stringer and a longitudinal permanent means of access, if it provides a continuous passage of 600 mm. or more in width past frames or stiffeners on the side shell or longitudinal bulkhead. Openings in stringer plating utilized as permanent means of access are to be arranged with guard rails or grid covers to provide safe passage on the stringer or safe access to each transverse web.

(7) *Refer to UI SC190 and UI SC191 for interpretations acceptable to* ***TL****.*

3.5 Vertical ladder

Vertical ladder means a ladder of which the inclined angle is 70° and over up to 90°. A vertical ladder is not to be skewed by more than 2°.

3.6 Overhead obstructions

Overhead obstructions mean the deck or stringer structure including stiffeners above the means of access.

3.7 Distance below deck head

Distance below deck head means the distance below the plating.

3.8 Cross deck

Cross deck means the transverse area of the main deck which is located inboard and between hatch coamings.

4. Technical Provisions

4.1 Structural members subject to the close-up inspections and thickness measurements of the ship's structure, except those in double bottom spaces, shall be provided with a permanent means of access to the extent as specified in Table 16.6 and Table 16.7, as applicable. For oil tankers and wing ballast tanks of ore carriers, approved alternative methods may be used in combination with the fitted permanent means of access, provided that the structure allows for its safe and effective use.

4.2 Permanent means of access should as far as possible be integral to the structure of the ships, thus ensuring that they are robust and at the same time contributing to the overall strength of the structure of the ship.

4.3 Elevated passageways forming sections of a permanent means of access, where fitted, is to have a minimum clear width of 600 mm, except for going around vertical webs where the minimum clear width may be reduced to 450 mm, and have guard rails over the open side of their entire length. Sloping structures providing part of the access is to be of a non-skid construction. Guard rails are to be 1,000 mm. in height and consist of a rail and an intermediate bar 500 mm. in height and of substantial construction. Stanchions are to be not more than 3 m. apart.

4.4 Access to permanent means of access and vertical openings from the ship's bottom is to be provided by means of easily accessible passageways, ladders or treads. Treads are to be provided with lateral support for the foot. Where the rungs of ladders are fitted against a vertical surface, the distance from the centre of the rungs to the surface is to be at least 150 mm. Where vertical manholes are fitted higher than 600 mm. above the walking level, access is to be facilitated by means of treads and hand grips with platform landings on both sides.

4.5 Permanent inclined ladders are to be inclined at an angle of less than 70º. There are to be no obstructions within 750 mm. of the face of the inclined ladder, except that in way of an opening this clearance may be reduced to 600 mm. Resting platforms of adequate dimensions are to be provided, normally at a maximum of 6 m. vertical height. Ladders and handrails are to be constructed of steel or equivalent material of adequate strength and stiffness and securely attached to the structure by stays. The method of support and length of stay is to be such that vibration is reduced to a practical minimum. In cargo holds, ladders are to be designed and arranged so that cargo handling difficulties are not increased and the risk of damage from cargo handling gear is minimized.

4.6 The width of inclined ladders between stringers is to not be less than 400 mm. The treads are to be equally spaced at a distance apart, measured vertically, of between 200 mm. and 300 mm. When steel is used, the treads are to be formed of two square bars of not less than 22 mm. by 22 mm. in section, fitted to form a horizontal step with the edges pointing upward. The treads are to be carried through the side stringers and attached thereto by double continuous welding. All inclined ladders are to be provided with handrails of substantial construction on both sides, fitted at a convenient distance above the treads.

4.7 For vertical ladders or spiral ladders, the width and construction should be in accordance with international or national standards accepted by **TL**.

4.8 No free-standing portable ladder is to be more than 5 m long.

4.9 Alternative means of access include, but are not limited to, such devices as:

- Hydraulic arm fitted with a stable base
- Wire lift platform
- Staging
- Rafting
- Root arm or remotely operated vehicle (ROV)
- Portable ladders more than 5 m. long are only to be utilized if fitted with a mechanical device to secure the upper end of the ladder
- Other means of access, approved by and acceptable to **TL**

Means for safe operation and rigging of such equipment to and from and within the spaces are to be clearly described in the Ship Structure Access Manual.

Note: For guidelines for approval / acceptance of alternative means of access, IACS Recommendation 91 shall be applied.

4.10 For access through horizontal openings, hatches or manholes, the minimum clear opening is not to be less than 600 mm. x 600 mm. When access to a cargo hold is arranged through the cargo hatch, the top of the ladder to be placed as close as possible to the hatch coaming. Access hatch coamings having a height greater than 900 mm. is also to have steps on the outside in conjunction with the ladder.

4.11 For access through vertical openings, or manholes, in swash bulkheads, floors, girders and web frames providing passage through the length and breadth of the space, the minimum opening is to be not less than 600 mm.×800 mm. at a height of not more than 600 mm. from the passage unless gratings or other foot holds are provided.

4.12 For oil tankers of less than 5,000 tonnes deadweight, TL may approve, in special circumstances, smaller dimensions for the openings referred to in 4.10 and 4.11, if the ability to traverse such openings or to remove an injured person can be proved to the satisfaction of TL.

4.13 For bulk carriers, access ladders to cargo holds and other spaces are to be:

4.13.1 Where the vertical distance between the upper surface of adjacent decks or between deck and the bottom of the cargo space is not more than 6 m, either a vertical ladder or an inclined ladder.

4.13.2 Where the vertical distance between the upper surface of adjacent decks or between deck and the bottom of the cargo space is more than 6 m, an inclined ladder or series of inclined ladders at one end of the cargo hold, except the uppermost 2,5 m. of a cargo space measured clear of overhead obstructions and the lowest 6 m. may have vertical ladders, provided that the vertical extent of the inclined ladder or ladders connecting the vertical ladders is not less than 2,5 m.

The second means of access at the other end of the cargo hold may be formed of a series of staggered vertical ladders, which should comprise of one or more ladder linking platforms spaced not more than 6 m. apart vertically and displaced to one side of the ladder Adjacent sections of ladder should be laterally offset . from each other by at least the width of the ladder. The uppermost entrance section of the ladder directly exposed to a cargo hold should be vertical for a distance of 2,5 m. measured clear of overhead obstructions and connected to a ladder-linking platform.

4.13.3 A vertical ladder may be used as a means of access to topside tanks, where the vertical distance is 6 m or less between the deck and the longitudinal means of access in the tank or the stringer or the bottom of the space immediately below the entrance. The uppermost entrance section from deck of the vertical ladder of the tank should be vertical for a distance of 2,5 m. measured clear of overhead obstructions and comprise a ladder linking platform, unless landing on the longitudinal means of access, the stringer or the bottom within the vertical distance, displaced to one side of a vertical ladder.

Table 16.6 Means of access for ballast and cargo tanks of oil tankers

1. Water ballast tanks except those specified in the right column, and cargo oil tanks	**2. Water ballast wing tanks of less than 5 m width forming double side spaces and their bilge hopper sections**
Access to the underdeck and vertical structure	
1.1 For tanks of which the height is 6 m and over containing internal structures, permanent means of access be provided in accordance with 1. to 6.: **.1** Continuous athwartship permanent access arranged at each transverse bulkhead on the stiffened surface, at a minimum of 1,6 m. to a maximum of 3 m. below the deck head; **.2** At least one continuous longitudinal permanent means of access at each side of the tank. One of these accesses is to be at a minimum of 1,6 m. to a maximum of 6 m below the deck head and the other is to be at a minimum of 1,6 m. to a maximum of 3 m. below the deck head; **.3** Access between the arrangements specified in .1 and .2 and from the main deck to either .1 or .2; **.4** Continuous longitudinal permanent means of access which are integrated in the structural member on the stiffened surface of a longitudinal bulkhead, in alignment, where possible, with horizontal girders of transverse bulkheads are to be provided for access to the transverse webs unless permanent fittings are installed at the uppermost platform for use of alternative means, as defined in 3.9 for inspection at intermediate heights **.5** For ships having cross-ties which are 6 m. or more above tank bottom, a transverse permanent means of access on the cross ties providing inspection of the tie flaring brackets at both sides of the tank, with access from one of the longitudinal permanent means of access in .4; and **.6** Alternative means as defined in 3.9 may be provided for small ships as an alternative to .4 for cargo oil tanks of which the height is less than 17 m.	**2.1** For double side spaces above the upper knuckle point of the bilge hopper sections, permanent means of access are to be provided in accordance with .1 to .3: **.1** Where the vertical distance between horizontal uppermost stringer and deck head is 6 m. or more, one continuous longitudinal permanent means of access shall be provided for the full length of the tank with a means to allow passing through transverse webs installed at a minimum of 1,6 m. to a maximum of 3 m. below the deck head with a vertical access ladder at each end of the tank; **.2** Continuous longitudinal permanent means of access, which are integrated in the structure, at a vertical distance not exceeding 6 m. apart; and **.3** Plated stringers shall, as far as possible, be in alignment with horizontal girders of transverse bulkheads.

Table 16.6 Means of access for ballast and cargo tanks of oil tankers (continued)

1. Water ballast tanks except those specified in the right column, and cargo oil tanks	**2. Water ballast wing tanks of less than 5 m width forming double side spaces and their bilge hopper sections**
Access to the underdeck and vertical structure	
1.2 For tanks of which the height is less than 6 m, alternative means as defined in 3.9 or portable means may be utilized in lieu of the permanent means of access.	**2.2** For bilge hopper sections of which the vertical distance from the tank bottom to the upper knuckle point is 6 m. and over, one longitudinal permanent means of access shall be provided for the full length of the tank. It shall be accessible by vertical permanent means of access at each end of the tank. **.1** The longitudinal continuous permanent means of access may be installed at a minimum 1,6 m. to maximum 3 m. from the top of the bilge hopper section. In this case, a platform extending the longitudinal continuous permanent means of access in way of the webframe may be used to access the identified structural critical areas. **.2** Alternatively, the continuous longitudinal permanent means of access may be installed at a minimum of 1,2 m. below the top of the clear opening of the web ring allowing a use of portable means of access to reach identified structural critical areas.
Fore peak tanks **1.3** For fore peak tanks with a depth of 6 m. or more at the centre line of the collision bulkhead, a suitable means of access shall be provided for access to critical areas such as the underdeck structure, stringers, collision bulkhead and side shell structure. **.1** Stringers of less than 6 m. in vertical distance from the deck head or a stringer immediately above are considered to provide suitable access in combination with portable means of access. **.2** In case the vertical distance between the deck head and stringers, stringers or the lowest stringer and the tank bottom is 6 m. or more, alternative means of access as defined in 3.9 shall be provided.	**2.3** Where the vertical distance is less than 6 m, alternative means as defined in 3.9 or portable means of access may be utilised in lieu of the permanent means of access. To facilitate the operation of the alternative means of access, in-line openings in horizontal stringers shall be provided. The openings shall be of an adequate diameter and shall have suitable protective railings.

Table 16.7 Means of access for bulk carriers

1. Cargo holds	**2. Ballast tanks**
Access to underdeck structure **1.1** Permanent means of access shall befitted to provide access to the overhead structure at both sides of the cross deck and in the vicinity of the centreline. Each means of access shall be accessible from the cargo hold access or directly from the main deck and installed at a minimum of 1,6 m. to a maximum of 3 m. below the deck. **1.2** An athwartship permanent means of access fitted on the transverse bulkhead at a minimum 1,6 m. to a maximum 3 m. below the cross-deck head is accepted as equivalent to 1.1. **1.3** Access to the permanent means of access to overhead structure of the cross deck may also be via the upper stool. **1.4** Ships having transverse bulkheads with full upper stools with access from the main deck which allows monitoring of all framing and plates from inside do not require permanent means of access of the cross deck. **1.5** Alternatively, movable means of access may be utilized for access to the overhead structure of the cross deck if its vertical distance is 17 m. or less above the tank top.	**Top side tanks** **2.1** For each topside tank of which the height is 6 m and over, one longitudinal continuous permanent means of access shall be provided along the side shell webs and installed at a minimum of 1,6 m. to a maximum of 3 m. below deck with a vertical access ladder in the vicinity of each access to that tank. **2.2** If no access holes are provided through the transverse webs within 600 mm. of the tank base and the web frame rings have a web height greater than 1 m. in way of side shell and sloping plating, then step rungs/grab rails shall be provided to allow safe access over each transverse web frame ring. **2.3** Three permanent means of access, fitted at the end bay and middle bay of each tank, shall be provided spanning from tank base up to the intersection of the sloping plate with the hatch side girder. The existing longitudinal structure, if fitted on the sloping plate in the space may be used as part of this means of access. **2.4** For topside tanks of which the height is less than 6 m, alternative means as defined in 3.9 or portable means may be utilized in lieu of the permanent means of access.
Access to vertical structures **1.6** Permanent means of vertical access shall be provided in all cargo holds and built into the structure to allow for an inspection of a minimum of 25 % of the total number of hold frames port and starboard equally distributed throughout the hold including at each end in way of transverse bulkheads. But in no circumstance shall this arrangement be less than 3 permanent means of vertical access fitted to each side (fore and aft ends of hold and mid-span). Permanent means of vertical access fitted between two adjacent hold frames is counted for an access for the inspection of both hold frames. A means of portable access may be used to gain access over the sloping plating of lower hopper ballast tanks. **1.7** In addition, portable or movable means of access shall be utilized for access to the remaining hold frames up to their upper brackets and transverse bulkheads.	**Bilge hopper tanks** **2.5** For each bilge hopper tank of which the height is 6 m. and over, one longitudinal continuous permanent means of access shall be provided along the side shell webs and installed at a minimum of 1,2 m below the top of the clear opening of the web ring with a vertical access ladder in the vicinity of each access to the tank. **.1** An access ladder between the longitudinal continuous permanent means of access and the bottom of the space shall be provided at each end of the tank. **.2** Alternatively, the longitudinal continuous permanent means of access can be located through the upper web plating above the clear opening of the web ring, at a minimum of 1,6 m. below the deck head, when this arrangement facilitates more suitable inspection of identified structurally critical areas. An enlarged longitudinal frame can be used for the purpose of the walkway.

Table 16.7 Means of access for bulk carriers (continued)

1. Cargo holds	2. Ballast tanks
1.8 Portable or movable means of access may be utilized for access to hold frames up to their upper bracket in place of the permanent means as required above. These means of access shall be carried on board the ship and readily available for use. **1.9** The width of vertical ladders for access to hold frames shall be at least 300 mm, measured between stringers. **1.10** A single vertical ladder over 6 m in length is acceptable for the inspection of the hold side frames in a single skin construction. **1.11** For double-side skin construction no vertical ladders for the inspection of the cargo hold surfaces are required. Inspection of this structure should be provided from within the double hull space.	**.3** For double-side skin bulk carriers, the longitudinal continuous permanent means of access may be installed within 6 m. from the knuckle point of the bilge, if used in combination with alternative methods to gain access to the knuckle point. **2.6** If no access holes are provided through the transverse ring webs within 600 mm. of the tank base and the web frame rings have a web height greater than 1 m. in way of side shell and sloping plating, then step rungs/grab rails shall be provided to allow safe access over each transverse web frame ring. **2.7** For bilge hopper tanks of which the height is less than 6 m, alternative means as defined in 3.9 or portable means may be utilized in lieu of the permanent means of access. Such means of access shall be demonstrated that they can be deployed and made readily available in the areas where needed. **Double-skin side tanks** **2.8** Permanent means of access shall be provided in accordance with the applicable sections of Tables 16.6
	Fore peak tanks **2.9** For fore peak tanks with a depth of 6 m or more at the centreline of the collision bulkhead, a suitable means of access shall be provided for access to critical areas such as the underdeck structure, stringers, collision bulkhead and side shell structure. **.1** Stringers of less than 6 m. in vertical distance from the deck head or a stringer immediately above are considered to provide suitable access in combination with portable means of access. **.2** In case the vertical distance between the deck head and stringers, stringers or the lowest stringer and the tank bottom is 6 m. or more, alternative means of access as defined in 3.9 shall be provided.

4.13.4 Unless allowed in 4.13.3 above, an inclined ladder or combination of ladders should be used for access to a tank or aspace where the vertical distance is greater than 6 m between the deck and a stringer immediately below the entrance, between stringers, or between the deck or a stringer and the bottom of the space immediately below the entrance.

4.13.5 In case of 4.13.4 above, the uppermost entrance section from deck of the ladder should be vertical for a distance of 2,5 m. clear of overhead obstructions and connected to a landing platform and continued with an inclined ladder. The flights of inclined ladders should not be more than 9 m. in actual length and the vertical height should not normally be more than 6 m. The lowermost section of the ladders may be vertical for a distance of not less than 2,5 m.

4.13.6 In double-side skin spaces of less than 2,5 m. width, the access to the space may be by means of vertical ladders that comprise of one or more ladder linking platforms spaced not more than 6 m. apart vertically and displaced to one side of the ladder. Adjacent sections of ladder should be laterally offset from each other by at least the width of the ladder.

4.13.7 A spiral ladder is considered acceptable as an alternative for inclined ladders. In this regard, the uppermost 2,5 m. can continue to be comprised of the spiral ladder and need not change over to vertical ladders.

4.14 The uppermost entrance section from deck of the vertical ladder providing access to a tank should be vertical for a distance of 2,5 m. measured clear of overhead obstructions and comprise a ladder linking platform, displaced to one side of a vertical ladder. The vertical ladder can be between 1,6 m. and 3 m. below deck structure if it lands on a longitudinal or athwartship permanent means of access fitted within that range.

5. Ship Structure Access Manual

5.1 A ship's means of access to carry out overall and close-up inspections and thickness measurements is to be described in a Ship structure access manual approved by **TL**, an updated copy of which is to be kept on board. The Ship structure access manual is to include the following for each space in the cargo area:

- Plans showing the means of access to the space, with appropriate technical specifications and dimensions.
- Plans showing the means of access within each space to enable an overall inspection to be carried out, with appropriate technical specifications and dimensions. The plans are to indicate from where each area in the space can be inspected.
- Plans showing the means of access within the space to enable close-up inspections to be carried out, with appropriate technical specifications and dimensions. The plans are to indicate the positions of critical structural areas, whether the means of access is permanent or portable and from where each area can be inspected.
- Instructions for inspecting and maintaining the structural strength of all means of access and means of attachment, taking into account any corrosive atmosphere that may be within the space
- Instructions for safety guidance when rafting is used for close-up inspections and thickness measurements
- Instructions for the rigging and use of any portable means of access in a safe manner
- An inventory of all portable means of access
- Records of periodical inspections and maintenance of the ship's means of access

5.2 For the purpose of these regulations "critical structural areas" are locations which have been identified from calculations to require monitoring or from the service history of similar or sister ships to be sensitive to cracking, buckling, deformation or corrosion which would impair the structural integrity of the ship.

H. Signal Masts

1. General

1.1 The requirements in this subsection apply to signal and radar masts only.

1.2 Masts carrying derricks or other cargo handling gear in addition to the signaling means and loose component parts are to comply with "Chapter 50 – Regulation for Lifting Appliances".

1.3 Drawings of masts, mast substructures and hull connections are to be submitted for approval.

2. Stayed Masts

2.1 The diameter D and wall thickness t at the uppermost support of masts made of steel with ultimate tensile strength of 400 N/mm^2 and stayed by two shrouds on each side of the ship are not to be less than the values obtained by the following formula:

$$D = 20\ \ell_m$$

$$t = 0.25\ \ell_m + 2.5$$

where:

D = Diameter at the uppermost housing [mm],

t = Wall thickness at the uppermost housing [mm],

ℓ_m = Length of mast from uppermost support to top [m].

2.2 The mast diameter may be gradually tapered Towards the hound to a value of 0.75 D at the uppermost housing, provided that the wall thickness of the mast is maintained throughout the length h. The remaining length of the mast top above the hound is not to exceed h/3.

2.3 The mast is to be stayed by the shrouds as follows:

Horizontal distance a from the deck stay eyeplate to the transverse plane through the mast stay eyeplate is to be not less than

a = 0.15 h

h = Vertical distance from the mast stay eyeplate to the deck stay eyeplate [m]

Horizontal distance b from the deck stay eyeplate to the longitudinal plane through the mast stay eyeplate is to be not less than

$$b = 0.30\ h$$

$$a \leq b.$$

3. Unstayed Masts

3.1 The diameter D and wall thickness t at the uppermost support of masts made of steel with ultimate tensile strength of 400 N/mm^2 are given in the Table 16.8.

3.2 The diameter of masts may be gradually tapered to D/2 at the height of 0,75 ℓ_m.

Table 16.8 Dimensions of unstayed steel masts

Length of mast ℓ_m [m]	6	8	10	12	14
D · t [mm]	160·4	220·4	290·4.5	360·5.5	430·6,5

ℓ_m = Length of mast from uppermost support to top
D = Diameter of mast at uppermost support
t = Plate thickness of mast

4. Masts of Special Construction

4.1 Where boxgirder and frame work masts are installed, detailed strength analysis is to be carried out and submitted to **TL**.

4.2 For dimensioning the dead loads, acceleration forces and wind loads are to be considered.

4.3 Where necessary additional loads e.g. loads caused by the sea fastening of crane booms or tension wires are also to be considered.

4.4 The design loads for 4.2 and 4.3 as well as the allowable stresses can be taken from the "Chapter 50 – Regulation for Lifting Appliances".

4.5 In case of thin walled box girder masts stiffeners and additional buckling stiffeners may be necessary.

5. Construction Details

5.1 Steel masts closed all-round must have a wall thickness of at least 4 mm.

For masts not closed all-round the minimum wall thickness is 6 mm.

5.2 Doubling plates at mast heel are permissible only for the transmission of compressive forces since they are generally not suitable for the transmission of tensile forces or bending moments.

5.3 In case of tubular constructions all welded fastenings and connections must be of full penetration weld type.

5.4 For determining scantlings of masts made from aluminium or austenitic steel, the requirements given in Section 3, A. 4. and 5.

5.5 At masts solid steel ladders have to be fixed at least up to 1,50 m. below top, if they have to be climbed for operational purposes. Above them, suitable handgrips are necessary.

5.6 If possible from the construction point of view, ladders should be at least 0.30 m. wide. The distance between the rungs must be 0,30 m. The horizontal distance of the rung centre from fixed parts must not be less than 0.15 m. The rungs must be aligned and be made of square steel bars 20/20 edge up.

5.7 Platforms on masts which have to be used for operational reasons, must have a rail of at least 0,90 m. in height with one intermediate bar. Safe access from the mast ladders to the platform is to be provided.

5.8 Foot, back, and hand rings enabling safe work in places of servicing and maintenance are to be installed.

I. Bolted Connections

Bolted connections are generally to be in accordance with Table 16.9

Table 16.9 Bolt pitch requirements for structural connections

Location	Distance between bolts
Manhole covers to fuel tanks	$5d_b$
Manhole covers to water tanks	$5d_b$
Covers over void tanks/ cofferdams	$10d_b$
Unstiffened portable plates in decks	$5d_b$
Bolted watertight door frames	$8d_b$
Window frames to superstructure	$20d_b$
d_b is the bolt diameter.	

SECTION 17

EQUIPMENT

Page

A. General

1. Application

The requirements in this section apply to anchoring, mooring and towing equipment. All ships are to have anchors, chain cables, wires and ropes determined from Table 17.1 and 17.2.

2. Assumptions

2.1 The anchoring equipment required by this Section is intended of temporary mooring of a vessel within a harbour or sheltered area when the vessel is awaiting berth, tide, etc.

2.2 The equipment is, therefore, not designed to hold a ship off fully exposed coasts in rough weather or to stop a ship which is moving or drifting. In this condition the loads on the anchoring equipment increase to such a degree that its components may be damaged or lost owing to the high energy forces generated, particularly in large ships.

2.3 The anchoring equipment required by this Section is designed to hold a ship in good holding ground in conditions such as to avoid dragging of the anchor. In poor holding ground the holding power of the anchors will be significantly reduced.

2.4 The equipment numeral formula for anchoring equipment required under this Section is based on an assumed current speed of 2,5 m/sec, wind speed of 25 m/sec and a scope of chain cable between 6 and 10, the scope being the ratio between length of chain paid out and water depth.

2.5 It is assumed that under normal circumstances a ship will use only one bow anchor and chain cable at a time.

3. Equipment Tables

3.1 In general, the equipment is to be in accordance with Table 17.1.

The two bower anchors and their chain cables are to be connected and stowed in position ready for use. The towline and mooring lines are given as guidance only and is not to be considered as condition of class.

3.2 For ships having the navigation notation **K20** or **K50**, **K6**, **L1**, **L2** the equipment in anchors and chain cables may be reduced. The reduction consists of taking one numeral lower in Table 17.1.

3.3 Upon requested by the owner, for ships having the notation **K20, K6, L1** and **L2**, one anchor may be used with **TL** consent. See table 17.2.

3.4 For tugs, the equipment is to be in accordance with the requirements of Section 29, E.

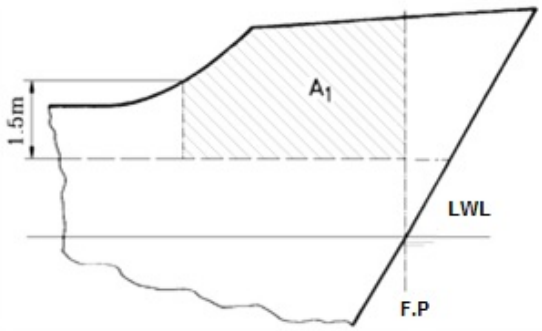

Figure 17.1 Effective area A_1 of bulwark

3.5 For fishing vessels, the equipment is to be in accordance with the requirements of Part C, Chapter 14, Section 19.

3.6 For barges and pontoons, the equipment is to be in accordance with the requirements of Section 33, H.

B. Equipment Number

The equipment of anchors and chain cables is to be as given in Table 17.1 and is to be based on an equipment number calculated as follows:

$$EN = D^{2/3} + 2h\,B + \frac{A}{10}$$

where:

D = Moulded displacement in [t] in sea water having a density of 1.025 [t/m^3] to the summer load waterline

B = Moulded breadth [m]

h = Effective height from the summer load waterline to the top of the uppermost house [m];

h = $a + \Sigma h_i$

a = Distance in [m], from the summer load waterline, amidships, to the upper deck at side.

h_i = Height in [m] on the centerline of each tier of houses having a breadth greater than B/4. For the lowest tier, "h_i" is to be measured at centerline from the upper deck or from a notional deck line where there is local discontinuity in the upper deck.

A = Area in [m^2], in profile view of the hull, superstructures and houses, having a breadth greater then **B**/4, above the summer load waterline within the length **L.**

Where a deckhouse having a breadth greater than **B**/4 is located above a deckhouse having a breadth of **B**/4 or less, the wide house is to be included and the narrow house ignored.

Screens of bulwarks 1.5 m. or more in height are to be regarded as parts of houses when determining h and A, e.g. the area shown in Fig.17.1 as A_1 is to be included in A. The height of the hatch coamings and that of any deck cargo, such as containers, may be disregarded when determining h and A.

C. Anchors

1. General

1.1 The anchors are to be of approved type and satisfy the testing conditions stated in Chapter 2, Rules for Materials, Section 12.

1.2 The number of bower anchors is to be determined according to Table 17.1.

1.3 Where in Table 17.1 two bow anchors are required, a stream anchor must be on board as a third anchor. Its mass must be according to column 5 of the table. Length and breaking load of chain or stream wire respectively are to be as given in columns 10 and 11.

1.4 Where in Table 17.1 three bower anchors are required the third anchor is intended as a spare bower anchor. Installation of the spare bower anchor on board is not required. Upon agreement by the owner the spare anchor may even be dispensed with.

1.5 A stern anchor in the sense of these Rules is named a stream anchor of small seagoing ships, i.e. up to and including the equipment numeral of EN=205.

2. Types of Anchors

2.1 Ordinary stockless anchors

2.1.1 Ordinary anchors of stockless type are to be generally adopted.

2.1.2 The mass of the heads of stockless anchors including pins and fittings are not to be less than 60% of the total mass of the anchor.

2.1.3 The mass, per anchor, of bower anchor given in Table 17.1 is required for anchors of equal mass. The mass of individual anchor may vary to 7% of the Table mass provided that the total mass of anchors is not less than that required for anchors of equal mass.

2.2 High holding power (HHP) anchors

2.2.1 A “high holding power” anchor is to be suitable for ship’s use and is not to require prior adjustment or special placement on the sea bottom.

2.2.2 When special type of anchors designated “high holding power anchor” of proven superior holding ability are used as bower anchors, the mass of each anchor may be 75% of the mass required for ordinary stockless bower anchors in the Table 17.1.

2.2.3 For approval as HHP anchor satisfactory tests are to be made on various types of bottom, and the anchor is to have a holding power at least twice than of an ordinary stockless anchor of the same weight. Full scale tests are to be carried out at sea on various types of bottom and to be applied to anchors the weights of

which are, as far as possible, representative of the full range of sizes proposed; for a definite group of the range the two anchors selected for testing (ordinary stockless anchors and HHP anchors) should be of approximately the same weight, and should be tested in association with the size of chain cable appropriate to this weight.

The length of cable with each anchor should be such that the pull on the shank remains practically horizontal, for this purpose a scope of 10 is considered normal but a scope of not less than 6 may be accepted. Scope is defined as the ratio of length of cable to depth of water.
Three tests are to be taken for each anchor and nature of bed. The pull is to be measured by dynamometer. The stability of the anchor and ease of breaking out should be noted where possible. Tests are normally to be carried out from a tug but alternatively shore based tests may be accepted.

Measurements of pull based on RPM/bollard pull curve of tug may be accepted instead of dynamometer readings. Tests in comparison with a previously approved HHP anchor may be accepted as a basis for approval.

For approval and/or acceptance of high holding power anchors of the whole range of weight, tests should be carried out on at least two-sizes of anchors and the weight of the maximum size to be approved could be accepted up to 10 times the weight of large size tested.

2.3 Very high holding power (VHHP) anchors

2.3.1 Definition

A very high holding power anchor is an anchor with a holding power of at least four times that of an ordinary stockless anchor of the same mass and is not to require prior adjustment or special placement on the sea bed.

2.3.2 Limitations to usage

The use of VHHP anchors is limited to vessels with service notation Y or stricter.

The VHHP anchor mass should generally not exceed 1500 kg.

2.3.3 Anchor mass

When VHHP anchors of the proven holding power given in 2.3.4 below are used as bower anchors, the mass of each such anchor may be reduced to not less than 50% of the mass required for ordinary stockless anchors in Table 17.1.

2.3.4 Anchor holding power

For approval as VHHP anchor satisfactory full scale tests are to be made confirming that the anchor has a holding power of at least four times that of an ordinary stockless anchor or at least two times that of a previously approved HHP anchor, of the same mass.

The tests are also to verify that the anchor withstands the test without permanent deformation.

2.3.5 Anchor holding power tests

2.3.5.1 The full scale tests required by 2.3.4 are to be carried out at sea on three types of bottom; normally soft mud or silt, sand or gravel and hard clay or similar compounded material. The tests are to be applied to anchors of mass which are as far as possible representative of the full range of sizes proposed.

For a definite group within the range, the two anchors selected for testing (ordinary stockless anchors and VHHP anchors) should be of approximately the same weight, and should be tested in association with the size of chain cable required for the anchor mass and anchor type. Where an ordinary stockless anchor is not available, a previously approved HHP anchor may be used in its place. The length of the cable with each anchor should be such that the pull on the shank remains practically horizontal. For this purpose a scope of 10 is considered normal.

Three tests are to be taken for each anchor and each type of bottom. The pull is to be measured by dynamometer. The stability of the anchor and ease of breaking out should be noted where possible. Tests are normally to be carried out from a tug but alternatively shore based tests may be accepted.

Measurements of pull, based on RPM/bollard pull curve of tug may be accepted instead of dynamometer readings.

Tests in comparison with a previously approved VHHP anchor may be accepted as a basis for approval.

If approval is sought for a range of anchor sizes, then at least three anchor sizes are to be tested, indicative of the bottom, middle and top of the mass range.

2.3.5.2 The holding power test load is not to exceed the proof load of the anchor.

3. Proof Testing of Anchors

3.1 Testing of ordinary anchors

3.1.1 The proof load as per Table 17.3 is to be applied on the arm or on the palm at a spot which, measured from extremity of the bill, is one-third of the distance between it and the center of the crown.

In the case of stockless anchors, both arms are to be tested at the same time, first on one side of the shank, then reversed and tested on the other.

3.1.2 Anchors of all sizes should be proof tested with the test loads stipulated in the Table 17.3.

3.1.3 Before application of proof test load the anchors are to be examined to be sure that castings are reasonably free of surface imperfections of harmful nature.

After proof load testing the anchors are to be examined for cracks and other defects.

On completion of the proof load tests the anchors made in more than one piece are to be examined for free rotation of their heads over the complete angle.

In every test the difference between the gauge lengths (as shown in Figure 17.2) where one-tenth of the required load was applied first and where the load has been reduced to one-tenth of the required load from the full load may be permitted not to exceed 1%.

3.2 Testing of HHP anchors

The HHP anchor is to be proof tested with load required by Table 17.3 for an anchor mass equal to 1.33 times the actual mass of the HHP anchor. The proof loading procedure and examination procedure for HHP anchors are to comply with those for ordinary anchors.

3.3 Testing of VHHP anchors

3.3.1 Anchor proof test

The VHHP anchor is to be proof tested with the load required by Table 17.3 for an anchor mass equal to 2 times the actual mass of the VHHP anchor. The proof loading procedure and examination procedure for VHHP anchors are to comply with those for ordinary anchors.

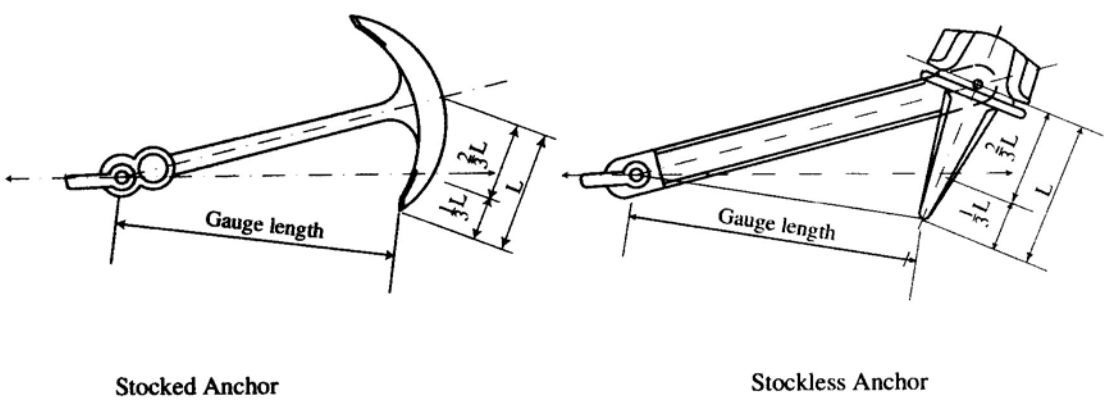

Figure 17.2 Gauge length

3.3.2 Anchor inspection and additional tests

After the proof load test, all VHHP anchors are to be surface inspected by the dye penetrant method or by the magnetic particle method. All surface of cast steel anchors are to be surface inspected. All cast steel anchors are to be examined by UT in way of areas where feeder heads and risers have been removed and where weld repairs have been carried out. Welded steel anchors are to be inspected at the welds. At sections of high load or at suspect areas, **TL** may impose volumetric nondestructive examination (e.g. ultrasonic inspection, or radiographic inspection).

D. Anchor Chain Cables

1. Material

1.1 The anchor chain cable diameters given in the Tables apply to chain cables made of chain cable materials specified in the requirements of Chapter 2, Rules for Materials for the following grades:

- Grade K1 (mild steel)
- Grade K2 (special quality)
- Grade K3 (extra special quality)

1.2 Anchor chain cables made of Grade K1 are normally not to be used in association with HHP and VHHP anchors.

2. Scantlings

The diameter and length of stud link chain cables is to be not less than the values given in Table 17.1.

The mass and geometry of stud link chain cables are to be in compliance with the requirements in Chapter 2, Rules for Material, Section 12.

3. Arrangement

3.1 Chain cables are to be made by lengths of 27.5 m each, joined together by Dee shackles.

3.2 The total length of chain given in the Table 17.1 is to be divided in approximately equal parts between the two bower anchors.

3.3 Either stud link or short link chain cables may be used for stream anchors.

3.4 For connection of the anchor with the chain cable approved Kenter-type anchor shackles may be chosen in lieu of the common Dee-shackles. A forerunner with swivel is to be fitted between anchor and chain cable. In lieu of a forerunner with swivel an approved swivel shackle may be used.

However, swivel shackles are not to be connected to the anchor shank unless specially approved. A sufficient number of suitable spare shackles are to be kept on board to facilitate fitting of the spare anchor at any time.

On owner’s request the swivel shackle may be dispensed with.

4. Steel Wire Rope for Anchors

Steel wire rope instead of stud link chain cable may be accepted for vessels of special design or operation and for vessels with restricted services. The acceptance will be based on a case-by –case evaluation, including consideration of operational and safety aspects. If steel wire rope is accepted, the following to be fulfilled:

- The steel wire rope shall have at least the same breaking strength as the stud link chain cable,
- A length of chain cable shall be fitted between the anchor and the steel wire rope. The length is to be taken as the smaller of 12.5 m. and the distance between the anchor in stowed position and the winch,
- The anchor weight is to be increased by 25%,
- The length of the steel wire rope is to be at least 50% above the values given in the Table 17.1 for the chain cable.

5. Proof and Breaking Loads

Design and/or standard breaking loads BL and proof

load PL [kN] of stud link chain cables are as follows:

For grade K1 :

$BL_1 = 9.80665 \cdot 10^{-3} \cdot [d^2 (44-0.08d)]$; $PL_1 = 0.7\ BL_1$

For Grade K2:

$BL_2 = 1.4\ BL_1$; $PL_2 = BL_1$

For Grade K3:

$BL_3 = 2\ BL_1$; $PL_3 = 1.4\ BL_1$

E. Installation of the Chain Cables on Board

1. Capacity and Arrangement of Anchor Chain Locker

1.1 The chain locker is to be of capacity and depth adequate to provide an easy direct lead of the cables through the chain pipes and self-stowing of the cables.

The minimum required stowage capacity without mud box for the two anchor chains is as follows:

$$S = 1{,}1 \cdot d^2 \cdot \frac{\ell}{100000} \quad [m^3]$$

d = Chain diameter [mm] according to Table 17.1

ℓ = Total length of stud link chain cable according to Table 17.1

The chain locker is to be provided with an internal division so that the port and starboard chain cables may be fully and separately stowed. The shape of the base areas shall as far as possible be quadratic with a maximum edge length of 33 d. As an alternative, circular base areas may be selected, the diameter of which shall not exceed 30-35 d.

Above the stowage of each chain locker in addition a free depth of

h = 1500 [mm] is to be provided.

1.2 The chain locker boundaries and their access openings are to be watertight as necessary to prevent accidental flooding of the chain locker from damaging essential auxiliaries or equipment or affecting the proper operation of the vessel.

1.3 Adequate drainage facilities of the chain locker are to be provided.

2. Special Requirements to Minimize the Ingress of Water

2.1 Spurling pipes and cable lockers are to be watertight up to the weather deck. Bulkheads between separate cable lockers (see arrangement 1 in Fig.17.3), or which form a common boundary of cable locker (see arrangement 2 in Figure 17.3), need not however be watertight.

2.2 Where means of access is provided, it is to be closed by a substantial cover and secured by closely spaced bolts.

2.3 Where a means of access to spurling pipes or cable lockers is located below the weather deck, the access cover and its securing arrangements are to be in accordance with recognized standards or equivalent for watertight manhole covers. Butterfly nuts and/or hinged bolts are prohibited as the securing mechanism for the access cover.

2.4 Spurling pipes through which anchor cables are led are to be provided with permanently attached closing appliances to minimize water ingress.

3. Securing of the Inboard Ends of Chain Cables

3.1 The inboard ends of the chain cables are to be secured to the structures by a fastening able to withstand a force not less than 15% BL nor more than 30% BL (BL= breaking load of the chain cable).

3.2 The fastening is to be provided with a mean suitable to permit, in case of emergency, an easy slipping of the chain cables to sea, operable from an accessible position outside the chain locker.

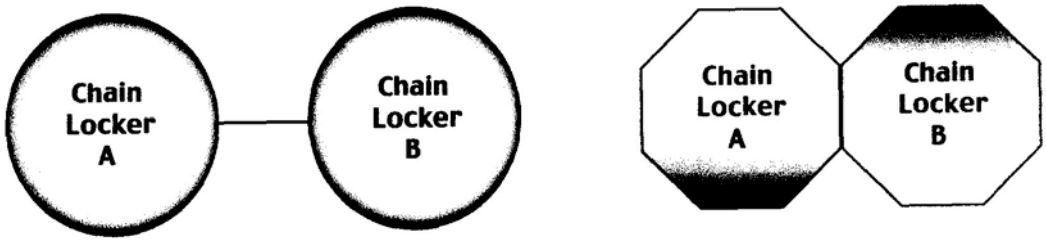

Arrangement 1 **Arrangement 2**

Figure 17.3 Chain locker arrangement

4. Chain Locker Boundaries

Where the chain locker boundaries are also tank boundaries their scantlings of stiffeners and plating are to be determined as for tanks in accordance with Section 11.

F. Mooring and Towing Equipment

1. Mooring Lines and Towing Lines

1.1 The mooring lines and towing line are given in Table 17.1 and are based in an equipment number EN calculated in compliance with B,1.

1.2 The towing lines given in col. 11 of Table 17.1 are intended as own towline of a ship to be towed by a tug or other ship.

1.3 Mooring lines and towing lines are given as guidance only.

2. Specifications of Mooring and Towing Ropes

2.1 Mooring lines and towlines may be of steel wire, natural fibre or synthetic fibre construction or of a mixture of steel wire and fibre. The lengths of individual mooring ropes may be reduced by up to 7% of the table length, provided that the total length of mooring ropes is not less than would have resulted had all ropes been of equal length.

2.2 Notwithstanding the strength requirements given in Table 17.1, no fibre rope is to be less than 20 mm diameter.

2.3 Wire ropes

2.3.1 Where wire ropes are used, they are to be of a flexible construction with not less than:

- 72 wires in 6 strands with 7 fibre cores for the loads up to 216 kN
- 144 wires in 6 strands with 7 fibre cores for the loads of 216 kN to 490 kN
- 216 wires in 6 strands with 1 fibre cores for loads exceeding 490 kN.

2.3.2 Tensile strength of wires for wire rope mooring lines is to be within the following ranges:

1420 - 1570 N/mm^2
1570 - 1770 N/mm^2
1770 - 1960 N/mm^2

2.3.3 Wire ropes for use in association with mooring winches where the rope is to be stored on the drum may be constructed with an independent wire rope core instead of fibre core.

2.4 The required diameters of synthetic fibre ropes used in lieu of steel wire ropes may be taken from Table 17.4.

G. Shipboard Fittings and Supporting Hull Structures Associated With Mooring and Towing

1. Mooring

1.1 Strength

The strength of shipboard fittings used for mooring operations and their supporting hull structures are to comply with the requirements of this subsection.

1.2 Arrangement

Shipboard fittings for mooring are to be located on longitudinal, beams and/or girders, which are part of the deck construction so as to facilitate efficient distribution of the mooring load. Other arrangements may be accepted (for Panama chocks, etc.) provided the strength is confirmed adequate for the service.

1.3 Load considerations

1.3.1 Unless greater safe working load (SWL) of shipboard fittings is specified by the applicant, the design load applied to shipboard fittings and supporting hull structures is to be 1.25 times the breaking strength of the mooring line according to Table 17.1.

Note :

Side projected area including maximum stacks of deck cargoes is to be taken into account for assessment of lateral wind forces, arrangements of tug boats and selection of mooring lines.

1.3.2 The design load applied to supporting hull structures for winches, etc. is to be 1.25 times the intended maximum brake holding load and, for capstans, 1.25 times the maximum hauling-in force.

1.3.3 The design load is to be applied through the mooring line according to the arrangement shown on the towing and mooring arrangement plans.

1.3.4 The method of application of the design load to the fittings and supporting hull structures is to be taken into account such that the total load need not be more than twice the design load specified in 1.3.1 above, i.e. no more than one turn of one line (see figure 17.4).

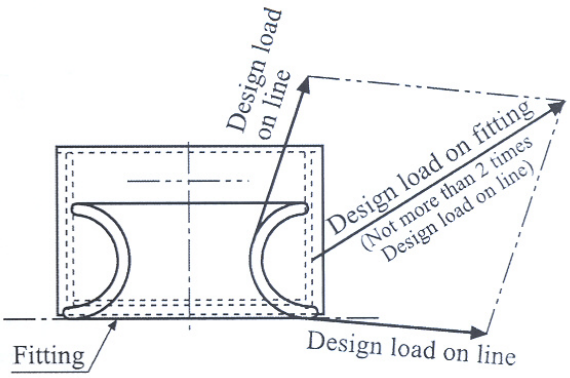

Figure 17.4 Application of design loads

1.3.5 When a specific SWL is applied for a shipboard fitting at the request of the applicant, by which the design load will be greater than the above minimum values, the strength of the fitting is to be designed using this specific design load.

1.4 Shipboard fittings

The selection of shipboard fittings is to be made by the shipyard in accordance with an industry standard (e.g. ISO 13795 Ships and marine technology – Ship's mooring and towing fittings – Welded steel bollards for sea-going vessels) accepted by **TL**. When the shipboard fitting is not selected from an accepted industry standard, the design load used to assess its strength and its attachment to the ship is to be in accordance with 1.3.

1.5 Supporting hull structure

1.5.1 Arrangement

Arrangement of the reinforced members beneath shipboard fittings is to consider any variation of direction (horizontally and vertically) of the mooring forces (which is to be not less than the design load as per 1.3) acting through the arrangement of connection to the shipboard fittings.

1.5.2 Acting point of mooring force

The acting point of the mooring force on shipboard fittings is to be taken at the attachment point of a mooring line or at a change in its direction.

1.5.3 Allowable stresses

Allowable stresses under the design load conditions as specified in 1.3 are as follows:

Normal stress: 100% of the specified minimum yield point of the material.

Shearing stress: 60% of the specified minimum yield point of the material.

No stress concentration factors being taken into account. Normal stress is the sum of bending stress and axial stress with the corresponding shearing stress acting perpendicular to the normal stress.

1.6 Safe working load (SWL)

1.6.1 The SWL is not to exceed 80% of the design load per 1.3.

1.6.2 The SWL of each shipboard fitting is to be marked (by weld bead or equivalent) on the deck fittings used for mooring.

1.6.3 The above requirements on SWL apply for a single post basis (no more than one turn of one cable).

1.6.4 The towing and mooring arrangements plan mentioned in **3.** is to define the method of use of mooring lines.

1.7 Net thickness (t_{net})

Strength calculations for supporting hull structures of mooring equipment are to be based on net thicknesses.

$t_{net} = t - t_k$

t_k = Corrosion addition according to G.4.

2. Towing

2.1 Strength

The strength of shipboard fittings used for normal towing operations at bow, sides and stern and their supporting hull structures are to comply with the requirements of this subsection.

2.2 Shipboard fittings for towing are to be located on longitudinals, beams and/or girders, which are part of the deck construction so as to facilitate efficient distribution of the towing load. Other arrangements may be accepted (for Panama chocks, etc.) provided the strength is confirmed adequate for the intended service.

2.3 Load considerations

Unless greater safe working load (SWL) of shipboard fittings is specified by the applicant, the minimum design load to be used is the following value of 2.3.1 or 2.3.2, whichever is applicable:

2.3.1 For normal towing operations (e.g. harbour) 1.25 times the intended maximum towing load (e.g. static bollard pull) as indicated on the towing and mooring arrangements plan.

2.3.2 For other towing service (e.g. escort), the nominal breaking strength of the tow line according to Table 17.1 for the equipment numeral EN.

Note:

Side projected area including maximum stacks of deck cargoes is to be taken into account for assessment of latera wind forces, arrangements of tug boats and selection of towing lines.

2.3.3 The design load is to be applied through the tow line according to the arrangement shown on the towing and mooring arrangements plan.

2.3.4 The method of application of the design load to the fittings and supporting hull structures is to be taken into account such that the total load need not be more than twice the design load (see figure 17.4).

2.3.5 When a specific SWL, is applied for a shipboard fitting at the request of the applicant, by which the design load will be greater than the above minimum values, the strength of the fitting is to be designed using this specific design load.

2.4 Shipboard fittings

The selection of shipboard fittings is to be made by the

shipyard in accordance with an industry standard (e.g. ISO 13795 Ships and marine technology – Ship's mooring and towing fittings – Welded steel bollards for sea-going vessels) accepted by **TL**. When the shipboard fitting is not selected from an accepted industry standard, the design load used to assess its strength and its attachment to the ship is to be in accordance with 2.3.

2.5 Supporting hull structure

2.5.1 Arrangement

The reinforced members beneath shipboard fittings are to be effectively arranged for any variation of direction (horizontally and vertically) of the towing forces (which is to be not less than the design load as per 2.3) acting through the arrangement of connection to the shipboard fittings.

2.5.2 Acting point of towing force

The acting point of the towing force on shipboard fittings is to be taken at the attachment point of a towing line or at a change in its direction.

2.5.3 Allowable stresses

Allowable stresses under the design load conditions as specified in 2.3 are as follows:

Normal stress: 100% of the specified minimum yield point of the material.

Shearing stress: 60% of the specified minimum yield point of the material.

No stress concentration factors being taken into account. Normal stress is the sum of bending stress and axial stress with the corresponding shearing stress acting perpendicular to the normal stress.

2.6 Safe working load (SWL)

2.6.1 The SWL used for normal towing operations is not to exceed 80% of the design load per 2.3.1 and SWL used for other towing operations is not to exceed the design load per 2.3.2. For fittings used both normal and other towing operations, the greater of the design loads of 2.3.1 and 2.3.2 is to be used.

2.6.2 The SWL of each shipboard fitting is to be marked (by weld bead or equivalent) on the deck fittings used for towing.

2.6.3 The above requirements on SWL apply for a single post basis (no more than one turn of one cable).

2.6.4 The towing and mooring arrangements plan mentioned in **3.** is to define the method of use of towing lines.

3. Towing and Mooring Arrangements Plan

3.1 The SWL for the intended use for each shipboard fitting is to be noted in the towing and mooring arrangements plan available on board for the guidance of the Master.

3.2 Information provided on the plan is to include in respect of each shipboard fitting:

- Location on the ship,
- Fitting type,
- SWL,
- Purpose (mooring/harbour towing/escort towing); and,
- Manner of applying towing or mooring line load including limiting fleet angles.

This information is to be incorporated into the pilot card in order to provide the pilot proper information on harbour/escorting operations.

4. Corrosion Addition

The total corrosion addition, t_K, in mm. for both sides of the hull supporting structure is not to be less than 2,0 mm.

5. Surveys After Construction

The condition of deck fitting, their pedestals, if any, and the hull structures in the vicinity of the fittings are to be examined in accordance with **TL** Rules. The wastage allowances as specified by **TL** Rules are not to exceed the corrosion addition as specified in 4.

Table 17.1 Anchor, Chain Cables and Ropes

Equipment numeral EN	Stockless anchor			Stud link chain cables						Recommended ropes				
	Bower anchor		Stream anchor	Bower anchors				Stream wire of chain for stream anchor		Tow line		Mooring ropes		
	Number	Mass per anchor		Total length	Diameter d_1	d_2	d_3	Length	Br.load	Length	Br.load	Num-ber	Length	Br. load
		Kg		m	mm	mm	mm	m	kN	m	kN		m	kN
1	2	3	4	5	6	7	8	9	10	11	12	13	14	15
up to- 50	2	120	40	165	12.5	12.5	12.5	80	65	180	100	3	80	35
50- 70	2	180	60	220	14	12.5	12.5	80	65	180	100	3	80	35
70- 90	2	240	80	220	16	14	14	85	75	180	100	3	100	40
90-110	2	300	100	247.5	17.5	16	16	85	80	180	100	3	110	40
110-130	2	360	120	247.5	19	17.5	17.5	90	90	180	100	3	110	45
130-150	2	420	140	275	20.5	17.5	17.5	90	100	180	100	3	120	50
150-175	2	480	165	275	22	19	19	90	110	180	100	3	120	55
175-205	2	570	190	302.5	24	20.5	20.5	90	120	180	110	3	120	60
205-240	3	660		302.5	26	22	20.5			180	130	4	120	65
240-280	3	780		330	28	24	22			180	150	4	120	70
280-320	3	900		357.5	30	26	24			180	175	4	140	80
320-360	3	1020		357.5	32	28	24			180	200	4	140	85
360-400	3	1140		385	34	30	26			180	225	4	140	95
400-450	3	1290		385	36	32	28			180	250	4	140	100
450-500	3	1440		412.5	38	34	30			180	275	4	140	110
500-550	3	1590		412.5	40	34	30			190	305	4	160	120
550-600	3	1740		440	42	36	32			190	340	4	160	130
600-660	3	1920		440	44	38	34			190	370	4	160	145
660-720	3	2100		440	46	40	36			190	405	4	160	160
720-780	3	2280		467.5	48	42	36			190	440	4	170	170
780-840	3	2460		467.5	50	44	38			190	480	4	170	185
840-910	3	2640		467.5	52	46	40			190	520	4	170	200
910-980	3	2850		495	54	48	42			190	560	4	170	215
980-1060	3	3060		495	56	50	44			200	600	4	180	230
1060-1140	3	3300		495	58	50	46			200	645	4	180	250
1140-1220	3	3540		522.5	60	52	46			200	690	4	180	270
1220-1300	3	3780		522.5	62	54	48			200	740	4	180	285
1300-1390	3	4050		522.5	64	56	50			200	785	4	180	305
1390-1480	3	4320		550	66	58	50			200	835	4	180	325
1480-1570	3	4590		550	68	60	52			220	890	5	190	325
1570-1670	3	4890		550	70	62	54			220	940	5	190	335
1670-1790	3	5250		577.5	73	64	56			220	1025	5	190	350
1790-1930	3	5610		577.5	76	66	58			220	1110	5	190	375
1930-2080	3	6000		577.5	78	68	60			220	1170	5	190	400
2080-2230	3	6450		605	81	70	62			240	1260	5	200	425
2230-2380	3	6900		605	84	73	64			240	1355	5	200	450
2380-2530	3	7350		605	87	76	66			240	1455	5	200	480
2530-2700	3	7800		632.5	90	78	68			260	1470	6	200	480
2700-2870	3	8300		632.5	92	81	70			260	1470	6	200	490
2870-3040	3	8700		632.5	95	84	73			260	1470	6	200	500
3040-3210	3	9300		660	97	84	76			280	1470	6	200	520
3210-3400	3	9900		660	100	87	78			280	1470	6	200	555
3400-3600	3	10500		660	102	90	78			280	1470	6	200	590
3600-3800	3	11100		687.5	105	92	81			300	1470	6	200	620
3800-4000	3	11700		687.5	107	95	84			300	1470	6	200	650

Table 17.1 Anchor, Chain Cables and Ropes (cont.)

Equipment numeral EN	Stockless anchor			Stud link chain cables						Recommended ropes				
	Bower anchor		Stream anchor	Bower anchors				Stream wire of chain for stream anchor		Tow line		Mooring ropes		
	Number	Mass per anchor		Total length	Diameter d_1	d_2	d_3	Length	Br.load	Length	Br.load	Num-ber	Length	Br. load
		Kg		m	mm	mm	mm	m	kN	m	kN		m	kN
1	2	3	4	5	6	7	8	9	10	11	12	13	14	15
4000-4200	3	12300		687.5	111	97	87			300	1470	7	200	650
4200-4400	3	12900		715	114	100	87			300	1470	7	200	660
4400-4600	3	13500		715	117	102	90			300	1470	7	200	670
4600-4800	3	14100		715	120	105	92			300	1470	7	200	680
4800-5000	3	14700		742.5	122	107	95			300	1470	7	200	685
5000-5200	3	15400		742.5	124	111	97			300	1470	8	200	685
5200-5500	3	16100		742.5	127	111	97			300	1470	8	200	695
5500-5800	3	16900		742.5	130	114	100			300	1470	8	200	705
5800-6100	3	17800		742.5	132	117	102			300	1470	9	200	705
6100-6500	3	18800		742.5		120	107			300	1470	9	200	715
6500-6900	3	20000		770		124	111			300	1470	9	200	725
6900-7400	3	21500		770		127	114			300	1470	10	200	725
7400-7900	3	23000		770		132	117			300	1470	11	200	725
7900-8400	3	24500		770		137	122			300	1470	11	200	735
8400-8900	3	26000		770		142	127			300	1470	12	200	735
8900-9400	3	27500		770		147	132			300	1470	13	200	735
9400-10000	3	29000		770		152	132			300	1470	14	200	735
10000-10700	3	31000		770			137			300	1470	15	200	735
10700-11500	3	33000		770			142			300	1470	16	200	735
11500-12400	3	33500		770			147			300	1470	17	200	735
12400-13400	3	38500		770			152			300	1470	18	200	735
13400-14600	3	42000		770			157			300	1470	19	200	735
14600-16000	3	46000		770			162			300	1470	21	200	735

- For the individual mooring lines with breaking strength above 490 kN, this breaking strength may be reduced with corresponding increase of number of the mooring lines, provided that the total breaking load of all lines aboard the ship is not less than the total loads as specified. The number of mooring lines is not to be less than 6 and no one line is to have a strength less than 490 kN.

Table 17.2 Equipment reduction for restricted service

Restriction of voyage	Stockless bower anchors		Stud-Link chain cables	
	Number	Mass change per anchor	Length reduction	Diameter reduction
3 nm from the coast line (Class D, L1 and L2)	2	-%30	-%20	-%10
6 nm from the coast line (Class C, **K6**)	2	-%30	-%20	-%10
20 nm from the coast line (Class B, **K20**)	2	-%20	-	--
Alternatively				
3 nm from the coast line (Class D, L1 and L2)	1	-	-%50	-
6 nm from the coast line (Class C, **K6**)	1	-	-%50	-
20 nm from the coast line (Class B, **K20**)	1	+%40	-%40	-

Table 17.3 Proof Load Tests for Anchors

Mass of anchor [kg]	Proof Test Load [kN]	Mass of anchor [kg]	Proof Test Load [kN]	Mass of anchor [kg]	Proof Test Load [kN]	Mass of anchor [kg]	Proof Test Load [kN]
50	23.2	1250	239	5000	661	12500	1130
55	25.2	1300	247	5100	669	13000	1160
60	27.1	1350	255	5200	677	13500	1180
65	28.9	1400	262	5300	685	14000	1210
70	30.7	1450	270	5400	691	14500	1230
75	32.4	1500	278	5500	699	15000	1260
80	33.9	1600	292	5600	706	15500	1270
90	36.3	1700	307	5700	713	16000	1300
100	39.1	1800	321	5800	721	16500	1330
120	44.3	1900	335	5900	728	17000	1360
140	49.0	2000	349	6000	735	17500	1390
160	53.3	2100	362	6100	740	18000	1410
180	57.4	2200	376	6200	747	18500	1440
200	61.3	2300	388	6300	754	19000	1470
225	65.8	2400	401	6400	760	19500	1490
250	70.4	2500	414	6500	767	20000	1520
275	74.9	2600	427	6600	773	21000	1570
300	79.5	2700	438	6700	779	22000	1620
325	84.1	2800	450	6800	786	23000	1670
350	88.8	2900	462	6900	794	24000	1720
375	93.4	3000	474	7000	804	25000	1770
400	97.9	3100	484	7200	818	26000	1800
425	103	3200	495	7400	832	27000	1850
450	107	3300	506	7600	845	28000	1900
475	112	3400	517	7800	861	29000	1940
500	116	3500	528	8000	877	30000	1990
550	124	3600	537	8200	892	31000	2030
600	132	3700	547	8400	908	32000	2070
650	140	3800	557	8600	922	34000	2160
700	149	3900	567	8800	936	36000	2250
750	158	4000	577	9000	949	38000	2330
800	166	4100	586	9200	961	40000	2410
850	175	4200	595	9400	975	42000	2490
900	182	4300	604	9600	987	44000	2570
950	191	4400	613	9800	998	46000	2650
1000	199	4500	622	10000	1010	48000	2730
1050	208	4600	631	10500	1040		
1100	216	4700	638	11000	1070		
1150	224	4800	645	11500	1090		
1200	231	4900	653	12000	1110		

- *Proof loads for intermediate mass are to be determined by linear interpolation.*

Table 17.4 Wire / fibre ropes diameter

Steel wire ropes (1)	Synthetic wire ropes Poly-amide (2)	Fibre ropes		
		poly-amide	poly-ester	polypro-pylene
diameter [mm]	diameter [mm]	diameter [mm]	diameter [mm]	diameter [mm]
12	30	30	30	30
13	30	32	32	32
14	32	36	36	36
16	32	40	40	40
18	36	44	44	44
20	40	48	48	48
22	44	48	48	52
24	48	52	52	56
26	56	60	60	64
28	60	64	64	72
32	68	72	72	80
36	72	80	80	88
40	72	88	88	96

(1) *According to DIN 3068 or similar*

(2) *Regular laid ropes of refined polyamide mono-filaments and filament fibers.*

SECTION 18

RUDDER AND MANOEUVRING ARRANGEMENT

A. General

1. Manoeuvring Arrangement

1.1 Each ship is to be provided with a manoeuvring arrangement which will guarantee sufficient manoeuvring capability.

1.2 The manoeuvring arrangement includes all parts from the rudder and steering gear to the steering position necessary for steering the ship.

1.3 This Section applies to ordinary profile rudders, and to some enhanced profile rudders with special arrangements for increasing the rudder force

This Section applies to rudders made of steel.

The steering gear is to comply with Chapter 4, Machinery, Section 9.

1.4 The steering gear compartment shall be readily accessible and, as far as practicable, separated from the machinery space (See also **SOLAS 74,** Chapter II/1, Reg. 29.13).

Guidance :

Concerning the use of non-magnetic material in the wheel house in way of a magnetic compass, the requirements of the national Administration concerned are to be observed.

1.5 For ice-strengthening see Section 14.

2. Structural Details

2.1 Effective means are to be provided for supporting the weight of the rudder body without excessive bearing pressure, e.g. by a rudder carrier attached to the upper part of the rudder stock. The hull structure in way of the rudder carrier is to be suitably strengthened.

2.2 Suitable arrangements are to be provided to prevent the rudder from lifting.

2.3 The rudder stock is to be carried through the hull either enclosed in a watertight trunk, or glands are to be fitted above the deepest load waterline, to prevent water from entering the steering gear compartment and the lubricant from being washed away from the rudder carrier. If the top of the rudder trunk is below the deepest waterline two separate stuffing boxes are to be provided.

3. Size of Rudder Area

In order to achieve sufficient manoeuvring capability the size of the movable rudder area A is recommended to be not less than obtained from the following formula:

$$A = c_1 \cdot c_2 \cdot c_3 \cdot c_4 \cdot \frac{1.75 \cdot L \cdot T}{100} [m^2]$$

c_1 = Factor for the ship type:

= 1.0 in general,

= 0.9 for bulk carriers and tankers having a displacement of more than 50 000 t,

= 1.7 for tugs and trawlers,

c_2 = Factor for the rudder type:

= 1.0 in general,

= 0.9 for semi-spade rudders,

= 0.7 for high lift rudders,

c_3 = Factor for the rudder profile:

= 1.0 for NACA-profiles and plate rudder,

= 0.8 for hollow profiles and mixed profiles,

c_4 = Factor for the rudder arrangement:

= 1.0 for rudders in the propeller jet,

= 1.5 for rudders outside the propeller jet.

For semi-spade rudder 50 % of the projected area of the rudder horn may be included into the rudder area A.

Where more than one rudder is arranged the area of each rudder can be reduced by 20 %.

Estimating the rudder area A, B.1 is to be observed.

4. Materials

4.1 Welded parts of rudders are to be made of approved rolled hull materials.

4.2 Material factor k for normal and high tensile steel plating may be taken into account when specified in each individual rule requirement. The material factor k is to be taken as defined in Section 3 Item A.2 Table 3.1, unless otherwise specified.

4.3 Steel grade of plating materials for rudders and rudder horns are to be in accordance with Section 3 Table 3.9.

4.4 For materials for rudder stock, pintles, coupling bolts etc. see Chapter 2, Rules for Material. Special material requirements are to be observed for the ice notations **B3** and **B4** as well as for the arctic ice notations **PC7 – PC1**.

4.5 In general materials having a minimum yield stress R_{eH} of less than 200 N/mm^2 and a minimum tensile strength of less than 400 N/mm^2 or more than 900 N/mm^2 shall not be used for rudder stocks, pintles, keys and bolts.

The requirements of this Section are based on a material's minimum yield stress R_{eH} of 235 N/mm^2. If material is used having a R_{eH} differing from 235 N/mm^2, the material factor k_r is to be determined follows:

$$k_r = \left[\frac{235}{R_{eH}}\right]^{0.75} \qquad \text{for } R_{eH} > 235 \text{ N/mm}^2$$

$$k_r = \frac{235}{R_{eH}} \qquad \text{for } R_{eH} \leq 235 \text{ N/mm}^2$$

R_{eH} = Yield strength of material used in [N/mm^2],

R_{eH} is not to be taken greater than $0.7 \cdot R_m$ or 450 N/mm^2, whichever is less. R_m is tensile strength of the material used.

4.6 Before significant reductions in rudder stock diameter due to the application of steels with R_{eH} exceeding 235 N/mm^2 are granted, **TL** may require the evaluation of the elastic rudder stock deflections. Large deflections should be avoided in order to avoid excessive edge pressures in way of bearings.

4.7 The permissible stresses given in E.1. are applicable for ordinary hull structural steel. When higher tensile steels are used, higher values may be used which will be fixed in each individual case.

5. Welding and design details

5.1 Slot-welding is to be limited as far as possible. Slot welding is not to be used in areas with large in plane stresses transversely to the slots or in way of cut out areas of semi-spade rudders.

When slot welding is applied, the length of slots is to be minimum 75 mm with breadth of 2 t, where t is the rudder plate thickness, in mm. The distance between ends of slots is not to be more than 125 mm. The slots are to be fillet welded around the edges and filled with a suitable compound, e.g. epoxy putty. Slots are not to be filled with weld.

Continuous slot welds are to be used in lieu of slot welds. When continuous slot welding is applied, the root gap is to be between 6-10 mm. The bevel angle is to be at least 15°.

5.2 In way of the rudder horn recess of semi-spade rudders the radii in the rudder plating are not to be less than 5 times the plate thickness, but in no case less than 100 mm. Welding in side plate are to be avoided in or at the end of the radii. Edges of side plate and weld adjacent to radii are to be ground smooth.

5.3 Welds between plates and heavy pieces (solid parts in forged or cast steel or very thick plating) are to be made as full penetration welds. In way of highly stressed areas e.g. cut-out of semi-spade rudder and upper part of spade rudder, cast or welding on ribs is to be arranged. Two sided full penetration welding is normally to be arranged. Where back welding is impossible welding is to be performed against ceramic backing bars or equivalent. Steel backing bars may be used and are to be continuously welded on one side to the heavy piece.

5.4 Requirements for welding and design details of rudder trunks are described in Item C.4.

5.5 Requirements for welding and design details when the rudder stock is connected to the rudder by horizontal flange coupling are described in Item D.2.5.

5.6 Requirements for welding and design details of rudder horns are described in Section 10 Item B.4.

6. Equivalence

6.1 **TL** may accept alternatives to requirements given in this Section, provided they are deemed to be equivalent.

6.2 Direct analyses adopted to justify an alternative design are to take into consideration all relevant modes of failure, on a case by case basis. These failure modes may include, amongst others: yielding, fatigue, buckling and fracture. Possible damages caused by cavitation are also to be considered.

6.3 If deemed necessary by **TL**, lab tests, or full scale tests may be requested to validate the alternative design approach.

7. Definitions

C_R = Rudder force in [N],

C_{R1} = Rudder forces related to partial rudder areas according to B.2.1

C_{R2} = Rudder forces related to partial rudder areas according to B.2.1

Q_R = Rudder torque in [Nm] according to B.1.2 or B.2.3 respectively,

Q_F = Design yield moment [Nm] of rudder stock according to H

Q_{R1} = Rudder torque related to partial rudder areas according to B.2.2

Q_{R2} = Rudder torque related to partial rudder areas according to B.2.2

A = Total movable area of the rudder [m^2], measured at the mid-plane of the rudder,

For nozzle rudders, A is not to be taken less than 1.35 times the projected area of the nozzle.

A_1, A_2 = Partial rudder areas [m^2] according to Figure 18.2

A_{1f}, A_{2f} = Partial rudder areas [m^2] situated ahead of the centre line of the rudder stock, see Figure 18.2

A_t = Sum of rudder blade area A and area of rudder post or rudder horn, if any, within the height b [m^2],

A_f = Portion of rudder area located ahead of the rudder stock axis [m^2],

b = Mean height of the rudder area [m]. Mean breadth and mean height of rudder are calculated according to the coordinate system in Figure 18.1 [m],

b_1, b_2 = Mean heights [m] of the partial rudder areas A_1 and A_2 according to Figure 18.2

c_1, c_2 = Mean breadth [m] of partial area A_1 and A_2, defined as:

$c_1 = A_1 / b_1$

$c_2 = A_2 / b_2$

c = Mean breadth of rudder area [m] see Figure18.1.

d_k = Diameter [mm] of the conical part of the rudder stock at the key

Λ = Aspect ratio of rudder area A_t,

$\Lambda = b^2/A_t$

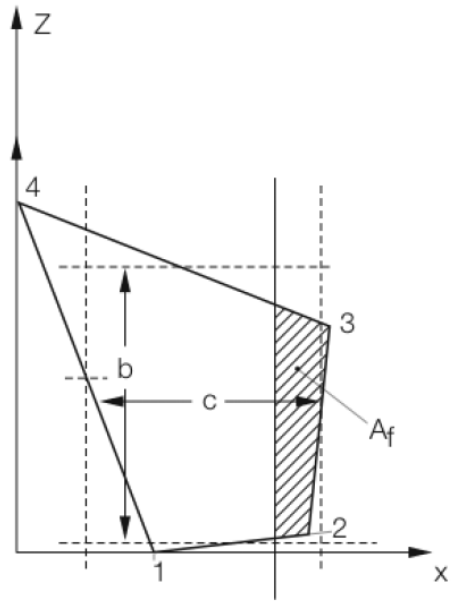

$$c = \frac{x_2 + x_3 - x_1}{2}$$

$$b = \frac{z_3 + z_4 - z_2}{2}$$

Figure 18.1 Rudder area geometry

v_0 = Ahead speed of ship in [kn] as defined in Section 1, H.5.; if this speed is less than 10 kn, v_0 is to be taken as

$$v_{min} = (v_0 + 20) / 3 \quad [kn]$$

v_a = Astern speed [kn] of ship; however in no case less than $0.5 \cdot v_0$. For ships strengthened for navigation in ice, refer to Section 14, D.9

α = 0.33 for ahead condition,

α = 0.66 for astern condition (general),

For parts of a rudder behind a fixed structure such as a rudder horn:

α = 0.25 for ahead condition,

α = 0.55 for astern condition.

k = Material factor according to Section 3, A.2.

k_r = Material factor according to A.4.5

For ships strengthened for navigation in ice, Section 14, D.10 have to be observed.

B. Rudder Force and Torque

1. Rudder Force and Torque for Rudder blades Without Cut-Outs (Normal Rudders)

1.1 The rudder force is to be determined according to the following formula:

$$C_R = 132 \cdot A \cdot v^2 \cdot \kappa_1 \cdot \kappa_2 \cdot \kappa_3 \text{ [N]}$$

v = ship's speed [kn] defined as;

= v_0 for ahead condition,

= v_a for astern condition,

κ_1 = Coefficient, depending on the aspect ratio Λ,

= (Λ + 2)/3, where Λ need not be taken greater than 2,

κ_2 = Coefficient, depending on the type of the rudder and the rudder profile according to Table 18.1,

κ_3 = Coefficient, depending on the location of the rudder,

= 0.8 for rudders outside the propeller jet,

= 1.15 for rudders aft of the propeller nozzle,

= 1.0 elsewhere, including also rudders within the propeller jet,

Table 18.1 Coefficient κ_2

Type of rudder/ profile	κ_2	
	Ahead condition	**Astern condition**
NACA-00 series Göttingen profiles 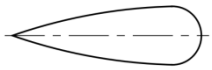	1,1	0,8
flat side profiles 	1,1	0,9
hollow profiles 	1,35	0,9
high lift rudders 	1,7	to be specially considered; if not known: 1,3
Fish tail 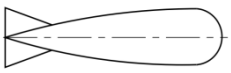	1,4	0,8
Single plate 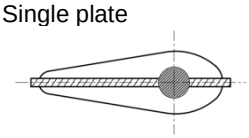	1,0	1,0
mixed profiles (e. g. HSVA)	1,21	0,9

1.2 The rudder torque is to be determined by the following formula for both the ahead and astern condition:

$$Q_R = C_R \cdot r \quad [Nm]$$

r = $c\ (\alpha - k_b)$ [m] without being less than 0.1c for ahead condition

For high lift rudders α is to be specially considered. If not known, $\alpha = 0.4$ may be used for the ahead condition

k_b = Balance factor

= A_f / A

k_b = 0.08 for unbalanced rudders,

1.3 Effects of the provided type of rudder / profile on choice and operation of the steering gear are to be observed.

2. Rudder Force and Torque for Rudder Blades with Cut-Outs (Semi-Spade Rudders)

2.1 The total rudder force C_R is to be calculated according to 1.1. The pressure distribution over the rudder area, upon which the determination of rudder torque and rudder blade strength is to be based, is to be derived as follows:

The rudder area may be divided into two rectangular or trapezoidal parts with areas A_1 and A_2, so that $A = A_1 + A_2$ (see Figure18.2).

The resulting forces of each part may be taken as:

$$C_{R1} = C_R \cdot \frac{A_1}{A} [N]$$

$$C_{R2} = C_R \cdot \frac{A_2}{A} [N]$$

2.2 The resulting torque of each part may be taken as:

$$Q_{R1} = C_{R1} \cdot r_1 \quad [Nm]$$

$$Q_{R2} = C_{R2} \cdot r_2 \quad [Nm]$$

Partial levers are defined as;

r_1 = $c_1\ (\alpha - k_{b1})$ [m]

r_2 = $c_2\ (\alpha - k_{b2})$ [m]

k_{b1} = A_{1f} / A_1

k_{b2} = A_{2f} / A_2

2.3 The total rudder torque is to be taken maximum of Q_R and Q_{Rmin} given by the following formula:

$$Q_R = Q_{R1} + Q_{R2} \quad [Nm] \quad \text{or}$$

$$Q_{Rmin} = C_R \cdot r_{1,2min} \quad [Nm]$$

$r_{1,2min}$ = minimum total lever [m], defined as:

$$r_{1,2min} = \frac{0.1}{A}(c_1 \cdot A_1 + c_2 \cdot A_2) \quad [m]$$

(for ahead condition)

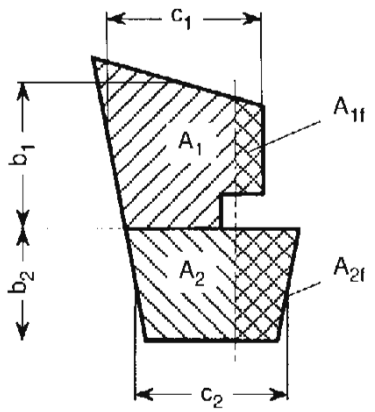

Figure 18.2 Partial rudder areas A_1 and A_2

C. Scantlings of the Rudder Stock

1. Rudder Stock Diameter

1.1 The diameter of the rudder stock for transmitting the torsional moment is not to be less than:

$$D_t = 4.2 \sqrt[3]{Q_R \cdot k_r} \quad [mm]$$

Q_R, see B.1.2 and B.2.2 - 2.3.

The related torsional stress is consequently not to be less than:

$$\tau_t = \frac{68}{k_r} \quad [N/mm^2]$$

1.2 The steering gear is to be determined according to Chapter 4- Machinery Installations, Section 9 for the rudder torque Q_R as required in B.1.2, B.2.2 or B.2.3 and under consideration of the frictional losses at the rudder bearings.

1.3 In case of mechanical steering gear the diameter of the rudder stock in its upper part which is only intended for transmission of the torsional moment from the auxiliary steering gear may be 0.9 D_t. The length of the edge of the quadrangle for the auxiliary tiller must not be less than 0.77 D_t and the height not less than 0.8 D_t.

1.4 The rudder stock is to be secured against axial sliding. The degree of the permissible axial clearance depends on the construction of the steering engine and on the bearing.

2. Strengthening of Rudder Stock

2.1 If the rudder is so arranged that additional bending stresses occur in the rudder stock, the stock diameter has to be suitably increased. The increased diameter is, where applicable, decisive for the scantlings of the coupling.

For the increased rudder stock diameter the equivalent stress of bending and torsion is not to exceed the following value:

$$\sigma_v = \sqrt{\sigma_b^2 + 3\tau^2} \leq 118 / k_r \quad [N/mm^2]$$

Bending stress:

$$\sigma_b = \frac{10.2 \cdot 10^3 \cdot M_b}{{D_1}^3} [N/mm^2]$$

M_b = Bending moment at the neck bearing [Nm],

Torsional stress:

$$\tau = \frac{5.1 \cdot 10^3 \cdot Q_R}{{D_1}^3} [N/mm^2]$$

D_1 = Increased rudder stock diameter [cm],

The increased rudder stock diameter [mm] may be determined by the following formula:

$$D_1 = D_t \cdot \left(1 + \frac{4}{3} \cdot \left(\frac{M_b}{Q_R}\right)^2\right)^{\frac{1}{6}}$$

Q_R, see B.1.2 and B.2.2 - 2.3

D_t = Diameter of the rudder stock according to 1.1.

Note :

Where a double-piston steering gear is fitted, additional bending moments may be transmitted from the steering gear into the rudder stock. These additional bending moments are to be taken into account for determining the rudder stock diameter.

2.2 Before significant reductions in rudder stock diameter due to the application of steels with yield stresses exceeding 235 N/mm^2 are granted, **TL** may require the evaluation of the rudder stock deformations. Large deformations of the rudder stock are to be avoided in order to avoid excessive edge pressures in way of bearings.

3. Calculation of Bending Moment and Shear Force Distribution

3.1 General

The evaluation of bending moments, shear forces and support forces for the system rudder–rudder stock may be carried out for some basic rudder types as outlined in 3.2 to 3.6.

3.2 Spade rudder

3.2.1 Data for the analysis

ℓ_{10} - ℓ_{30} = Lengths of the individual girders of the system [m] (Refer to Figure 18.3)

I_{10} - I_{30} = Moments of inertia of these girders [cm^4]

Load on rudder body:

$$P_R = \frac{C_R}{\ell_{10} \cdot 1000} \quad [\mathrm{kN/m}]$$

3.2.2 Moments and Forces

The moments and forces are to be determined by the following formulae:

$$M_R = C_R \cdot \left[\ell_{20} + \frac{\ell_{10} \cdot (2 \cdot c_1 + c_2)}{3 \cdot (c_1 + c_2)}\right] \quad [\mathrm{Nm}]$$

$$B_3 = \frac{M_b}{\ell_{30}} \quad [\mathrm{N}]$$

$$B_2 = C_R + B_3 \quad [\mathrm{N}]$$

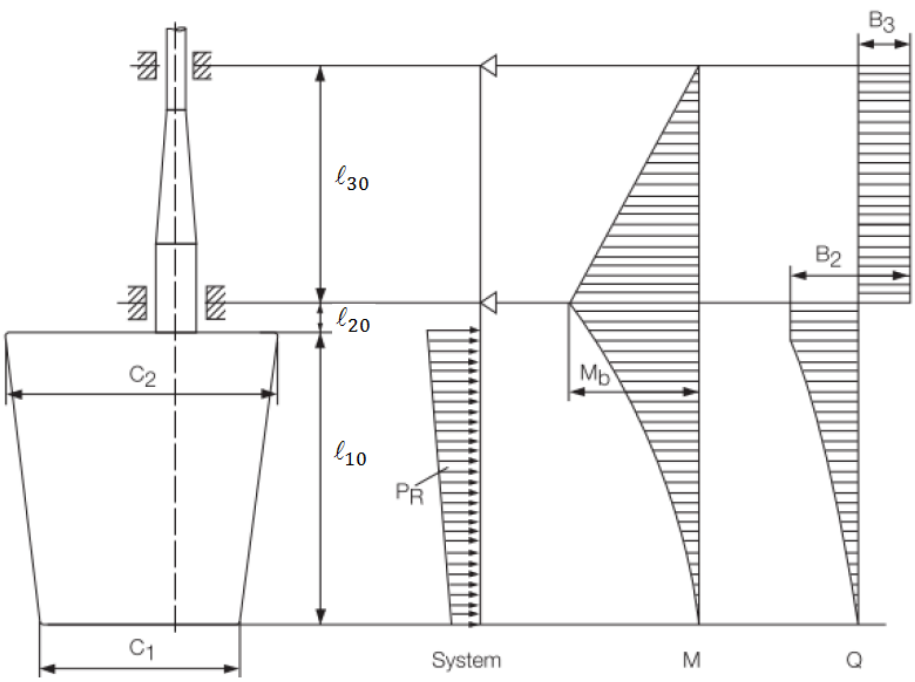

Figure 18.3 Load, Bending Moment and Shear Force Distribution on a Spade Rudder

3.3 Spade rudder with trunk

3.3.1 Data for the analysis

ℓ_{10} - ℓ_{30} = Lengths of the individual girders of the system [m] (Refer to Figure 18.4)

I_{10} - I_{30} = Moments of inertia of these girders [cm^4]

Load on rudder body:

$$P_R = \frac{C_R}{(\ell_{10} + \ell_{20}) \cdot 1000} \quad [kN/m]$$

3.3.2 Moments and Forces

For spade rudders with rudders trunks the moments, in Nm, and forces, in N, is to be determined by the following formulae:

M_R is the greatest of the following values:

$$M_R = C_{R2} \cdot (\ell_{10} - CG_{2z}) \quad [Nm]$$

$$M_R = C_{R1} \cdot (CG_{1z} - \ell_{10}) \quad [Nm]$$

Where:

C_{R1} = Rudder force over the rudder blade area A_1

C_{R2} = Rudder force over the rudder blade area A_2

CG_{1Z} = Vertical position of the centre of gravity of the rudder blade area A_1

CG_{2Z} = Vertical position of the centre of gravity of the rudder blade area A_2

$$M_B = C_{R2} \cdot (\ell_{10} - CG_{2Z})$$

$$B_3 = \frac{M_B + M_{CR1}}{\ell_{20} + \ell_{30}} \quad [N]$$

$$B_2 = C_R + B_3 \quad [N]$$

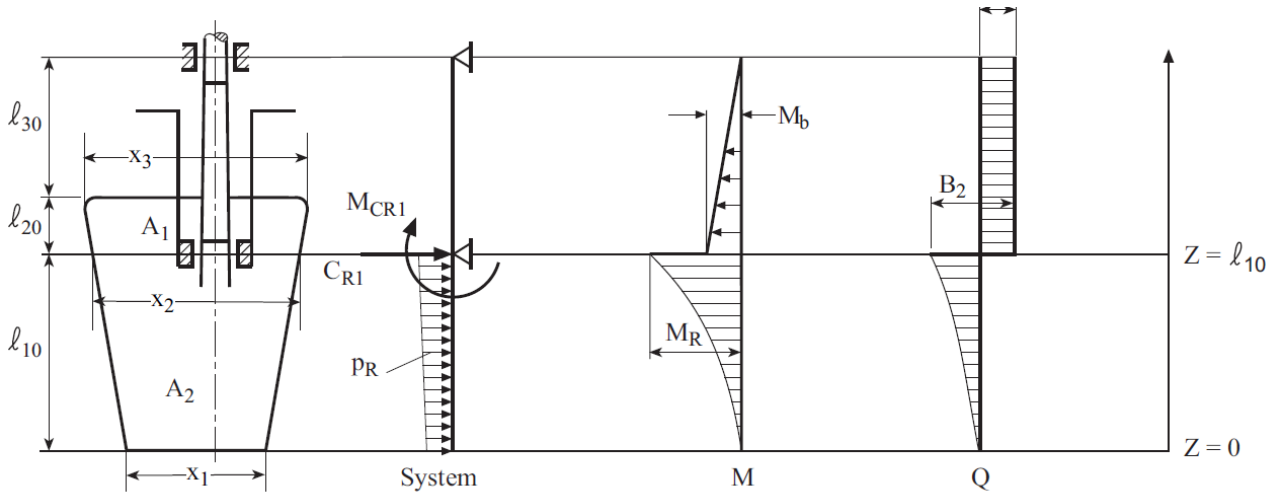

Figure 18.4 Load, Bending Moment and Shear Force Distribution on a Spade Rudder with Trunk

3.4 Rudder supported by sole piece

3.4.1 Data for the analysis

ℓ_{10} - ℓ_{50} = Lengths of the individual girders of the system [m] (Refer to Figure 18.5)

I_{10} – I_{50} = Moments of inertia of these girders [cm^4]

For rudders supported by a sole piece the length ℓ_{20} is the distance between lower edge of rudder body and centre of sole piece and I_{20} the moment of inertia of the pintle in the sole piece.

I_{50} = Moment of inertia of sole piece around the z-axis [cm4];

ℓ_{50} = Effective length of sole piece in [m];

Load on rudder body:

$$P_R = \frac{C_R}{\ell_{10} \cdot 1000} \quad [kN/m]$$

Z = spring constant of support in the sole piece

$$Z = \frac{6.18 \cdot I_{50}}{\ell_{50}^{\ 3}} \quad [kN/m]$$

3.4.2 Moments and Forces

Moments and shear forces are indicated in Figure 18.5.

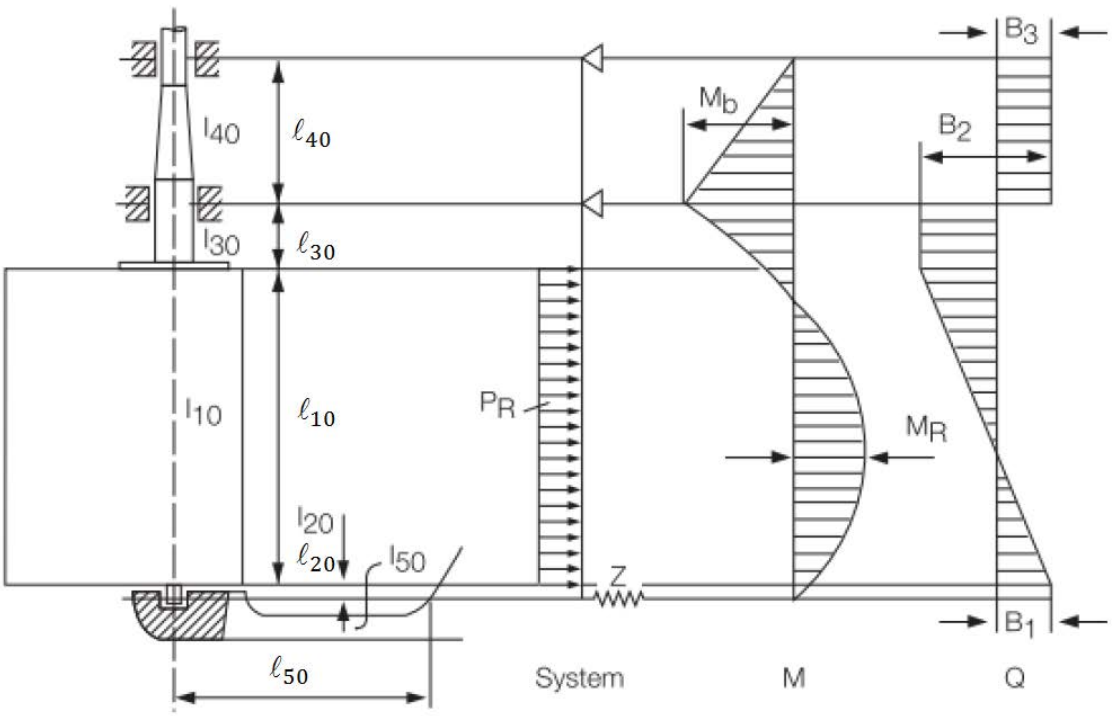

Figure 18.5 Load, Bending Moment and Shear Force Distribution on a Rudder Supported by a Sole Piece

3.5 Semi spade rudder with one elastic support

3.5.1 Data for the analysis

ℓ_{10} - ℓ_{50} = Lengths of the individual girders of the system [m] (Refer to Figure 18.6)

I_{10} – I_{50} = Moments of inertia of these girders [cm^4]

Z = Spring constant of support in the sole piece

$$Z = \frac{1}{f_b + f_t} \quad [kN/m]$$

(For the support in the rudder horn, refer to Figure 18.6)

f_b = Unit displacement of rudder horn in [m] due to a unit force of 1 kN acting in the centre of support;

$$f_b = \frac{1.3 \cdot d^3}{6.18 \cdot I_n} \quad [m/kN]$$

(Guidance value for steel)

I_n = Moment of inertia [cm^4] of rudder horn around the x-axis at d / 2, (refer to Figure 18.6)

f_t = Unit displacement [m / kN] due to a torsional moment of the amount 1 · e, defined as:

$$f_t = \frac{d \cdot e^2}{G \cdot J_t} [kN/m]$$

(In general)

$$f_t = \frac{d \cdot e^2 \cdot \sum \frac{u_i}{t_i}}{3.14 \cdot 10^8 \cdot {F_T}^2} \quad [kN/m]$$

(For steel)

G = Modulus of rigity [kN/m^2], to be taken as G =7.92·10^7 for steel

J_t = Torsional moment of inertia [m^4]

F_T = Mean sectional area [m^2] of rudder horn

U_i = Breadth [mm] of the individual plates forming the mean horn sectional area

t_i = Plate thickness [mm] within the individual breadth ui

d = Height if the rudder horn [m] according to Figure 18.6. This value is to be measured downwards from the upper rudder horn end, at the point of curvature transition, to the mid-line of the lower rudder horn pintle

e = Distance [m] according to Figure 18.6

For semi-spade rudders the loads PR10 and PR20 on rudder body are to be determined by the following formulae:

$$PR10 = \frac{C_{R2}}{\ell_{10} \cdot 1000} \quad [kN/m]$$

$$PR20 = \frac{C_{R1}}{\ell_{20} \cdot 1000} \quad [kN/m]$$

3.5.2 Moments and Forces

Moments and shear forces are indicated in Figure 18.6

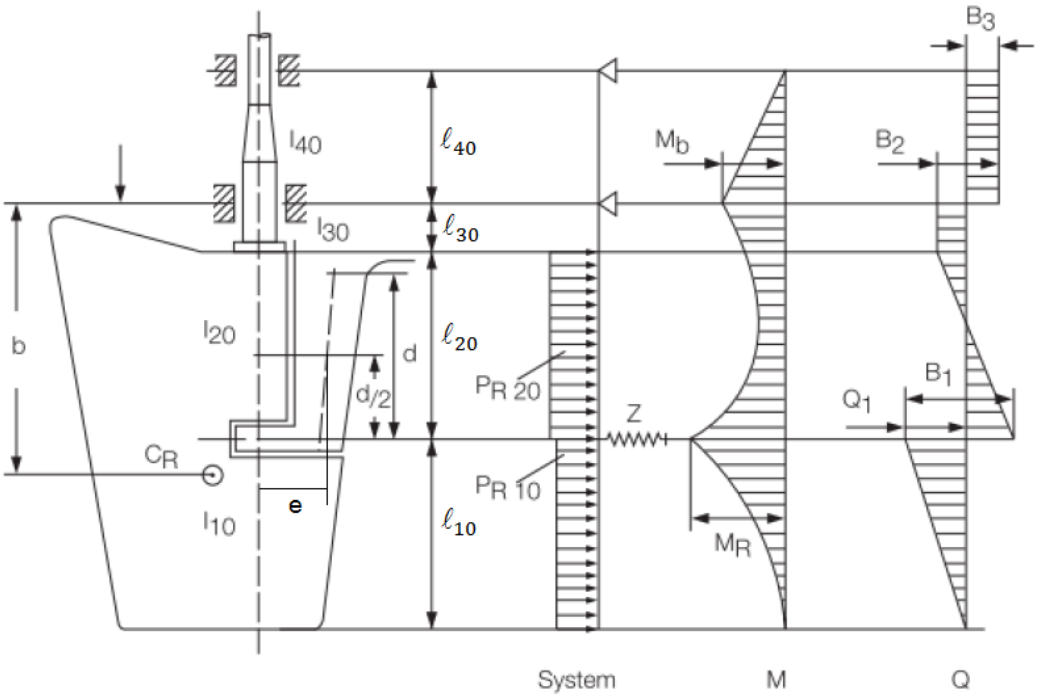

Figure 18.6 Load, Bending Moment and Shear Force Distribution on a Semi spade rudder with one elastic support

3.6 Semi spade rudder with two conjugate elastic support

3.6.1 Data for the analysis

K_{11}, K_{22}, K_{12} = Rudder horn compliance constants calculated for rudder horn with 2-conjugate elastic supports (Refer to Figure 18.7).The 2-conjugate elastic supports are defined in terms of horizontal displacements, yi, by the following equations:

at the lower rudder horn bearing:

$y_1 = -K_{12} \cdot B_2 - K_{22} \cdot B_1$

at the upper rudder horn bearing:

$y_2 = -K_{11} \cdot B_2 - K_{12} \cdot B_1$

where:

y_1, y_2 = Horizontal displacements, in m, at the lower and upper rudder horn bearings, respectively.

B_1, B_2 = Horizontal support forces, in kN, at the lower and upper rudder horn bearings, respectively.

K_{11}, K_{22}, K_{12} = Obtained, in m/kN, from the following formulae:

$$K_{11} = 1.3 \cdot \frac{\lambda^3}{3 \cdot E \cdot J_{1h}} + \frac{e^2 \cdot \lambda}{G \cdot J_{th}}$$

$$K_{22} = 1.3 \cdot \left[\frac{\lambda^3}{3 \cdot E \cdot J_{1h}} + \frac{\lambda^2 \cdot (d \cdot \lambda)}{2 \cdot E \cdot J_{1h}}\right] + \frac{e^2 \cdot \lambda}{G \cdot J_{th}}$$

$$K_{12} = 1.3 \cdot \left[\frac{\lambda^3}{3 \cdot E \cdot J_{1h}} + \frac{\lambda^2 \cdot (d \cdot \lambda)}{E \cdot J_{1h}} + \frac{\lambda \cdot (d \cdot \lambda)^2}{E \cdot J_{1h}} + \frac{(d \cdot \lambda)^3}{3 \cdot E \cdot J_{2h}}\right] + \frac{e^2 \cdot d}{G \cdot J_{th}}$$

d = Height of the rudder horn, in m, defined in Figure 18.7. This value is measured downwards from the upper rudder horn end, at the point of curvature transition, to the mid-line of the lower rudder horn pintle.

λ = Length, in m, as defined in Figure 18.7. This length is measured downwards from the upper rudder horn end, at the point of curvature transition, to the mid-line of the upper rudder horn bearing. For λ = 0, the above formulae converge to those of spring constant Z for a rudder horn with 1-elastic support, and assuming a hollow cross section for this part.

e = Rudder-horn torsion lever [m] as defined in Figure 18.7 (value taken at z = d/2).

J_{1h} = Moment of inertia of rudder horn about the x axis [m^4] for the region above the upper rudder horn bearing. Note that J1h is an average value over the length λ (see Figure 18.7)

J_{2h} = Moment of inertia of rudder horn about the x axis [m^4] for the region between the upper and lower rudder horn bearings. Note that J_{2h} is an average value over the length d - λ (see Figure 18.7).

J_{th} = Torsional stiffness factor of the rudder horn [m4] for any thin wall closed section to be calculated from the following formula:

$$J_{th} = \frac{4 \cdot {F_T}^2}{\sum_i \frac{u_i}{t_i}}$$

(For any thin wall closed section)

F_T = Mean of areas enclosed by outer and inner boundaries of the thin walled section of rudder horn [m^2].

u_i = Length [mm] of the individual plates forming the mean horn sectional area.

t_i = Thickness [mm] of the individual plates mentioned above.

Note that the J_{th} value is taken as an average value, valid over the rudder horn height.

Loads PR10 and PR20on rudder body are to be determined by the following formulae:

$$PR10 = \frac{C_{R2}}{\ell_{10} \cdot 1000} \quad [kN/m]$$

$$PR20 = \frac{C_{R1}}{\ell_{20} \cdot 1000} \quad [kN/m]$$

3.6.2 Moments and Forces

Moments and shear forces are indicated in Figure 18.7:

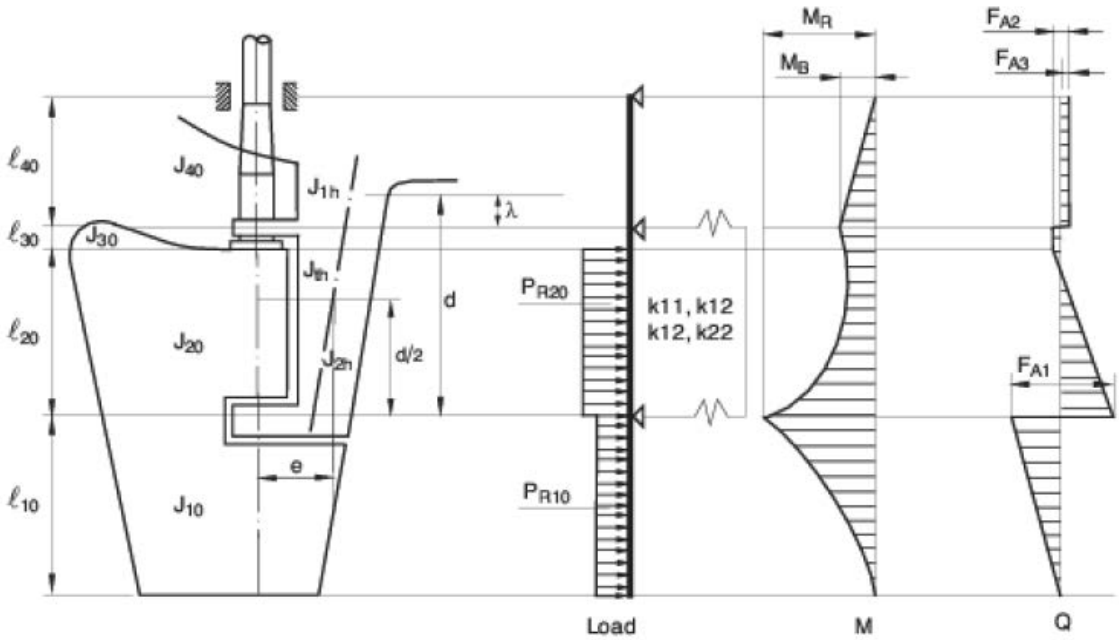

Figure 18.7 Load, Bending Moment and Shear Force Distribution on a Semi spade rudder with two conjugate elastic supports

4. Rudder Trunk

4.1 Materials, welding and connection to hull

Note: *This item 4 applies to both trunk configurations (extending or not below stern frame).*

4.1.1 The steel used for the rudder trunk is to be of weldable quality, with a carbon content not exceeding 0.23% on ladle analysis and a carbon equivalent C_{EQ} not exceeding 0.41.

Plating materials for rudder trunks are in general not to be of lower grades than corresponding to class II as defined in Section 3 A.2.3.2.

4.1.2 The weld at the connection between the rudder trunk and the shell or the bottom of the skeg is to be full penetration. Non destructive tests are to be conducted for all welds.

4.1.3 The fillet shoulder radius r, in mm (refer to Figure 18.8) is to be as large as practicable and to comply with the following formulae:

r = 60 [mm]

when σ ≥ 40 / k [N/mm²]

r = $0.1D_1$, (without being less than 30 [mm])

when σ < 40 / k [N/mm²]

where:

D_1 = rudder stock diameter axis defined in C.2.

σ = bending stress in the rudder trunk in N/mm².

k = material factor as given in Section 3 A.2.

4.1.4 Alternatively a fatigue strength calculation based on the structural stress (hot spot stress) (see Section 3 D.3.6) can be carried out.

4.1.4.1 In case the rudder trunk is welded directly into the skeg bottom or shell, hot spot stress has to be determined according to Section 20, C. In this case FAT class $\Delta\sigma_R$ = 100 has to be used, see Section 3 D.7.2.1.

4.1.4.2 In case the trunk is fitted with a weld flange, the stresses have to be determined within the radius. FAT class $\Delta\sigma_R$ for the case E 2 or E 3 according to Section 3, Table 3.32 has to be used. In addition sufficient fatigue strength of the weld has to be verified e.g. by a calculation according to E.4.4.1.

4.1.4.3 The radius may be obtained by grinding. If disk grinding is carried out, score marks are to be avoided in the direction of the weld. The radius is to be checked with a template for accuracy. Four profiles at least are to be checked. A report is to be submitted to the Surveyor.

Rudder trunks comprising of materials other than steel are to be specially considered by **TL**.

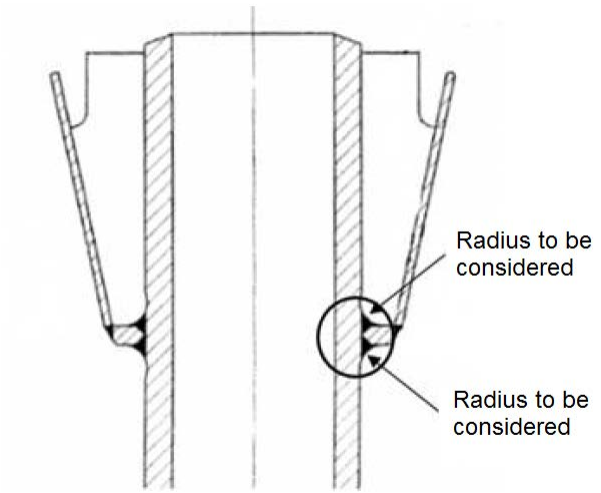

Figure 18.8 Fillet shoulder radius

4.2 Scantlings

4.2.1 In case where the rudder stock is fitted with a rudder trunk welded in such a way the rudder trunk is loaded by the pressure induced on the rudder blade, as given in B.1.1, the scantlings of the trunk are to be such that:

- The equivalent stress due to bending and shear does not exceed 0.35 R_{eH},
- The bending stress on welded rudder trunk is to be in compliance with the following formula: σ ≤ 80 / k [N/mm²]

Where:

σ = bending stress in the rudder trunk, as defined in 4.1.

k = material factor for the rudder trunk as given in Section 3 A.2, not to be taken less than 0.7

R_{eH}= yield stress (N/mm^2) of the material used

For calculation of bending stress, the span to be considered is the distance between the mid-height of the lower rudder stock bearing and the point where the trunk is clamped into the shell or the bottom of the skeg.

4.2.2 The minimum thickness of the shell or the bottom of the skeg is to be 0.4 times the wall thickness of the trunk at the connection.

The fillet shoulder radius is to be ground. The radius is to be as large as practicable but not less than 0.7 times the wall thickness of the trunk at the connection, if the wall thickness is greater than 50 mm. In case of smaller wall thickness, the radius is not to be less than 35 mm (refer to Figure 18.8).

5. Rudder Boss

The rudder boss is to comply with the following criteria:

Depth of boss ≥ D_t

Wall thickness of boss in way of tiller ≥ 0,4 D_t

D_t = Rudder stock diameter (as defined in C.1.1)

D. Rudder Couplings

1. General

1.1 The couplings are to be designed in such a way as to enable them to transmit the full torque of the rudder stock.

1.2 The distance of bolt axis from the edges of the flange is not to be less than 1.2 the diameter of the bolt. In horizontal couplings, at least 2 bolts are to be arranged forward of the stock axis.

1.3 The coupling bolts are to be fitted bolts. The bolts and nuts are to be effectively secured against loosening.

1.4 For spade rudders horizontal couplings according to 2. are permissible only where the required thickness of the coupling flanges t_f is less than 50 mm, otherwise cone couplings according to 4. are to be applied. For spade rudders of the high lift type, only cone couplings according to 4. are permitted.

1.5 Acceptability of contact area between pairing surfaces is to be shown to Surveyor by blue print test that is to be at least 70 % of the theoretical contact area where cone coupling method is preferred for between (depending on the case) rudder stock or pintle and rudder blade or steering gear, also refer to item 3. Non-contact areas should be distributed widely over the theoretical contact area. Due consideration is to be made that concentration of non-contacting areas in forward regions of the cone are avoided. The proof has to be demonstrated using the original components and the assembling of the components has to be done in due time to the creation of blue print to ensure the quality of the surfaces. In case of storing over a longer period, sufficient preservation of the surfaces is to be provided for.

Criteria for acceptability of contact area between pairing surfaces is that this area is to be at least 80 % of the theoretical contact area and this is to be certified where a male/female calibre system is employed. After ten applications or five years renewal of the blue print proof is required.

2. Horizontal Couplings

2.1 The diameter of coupling bolts is not to be less than:

$$d_b = 0.62 \cdot \sqrt{\frac{D^3 \cdot k_b}{n \cdot e \cdot k_s}}$$

D = Rudder stock diameter according to C, [mm],

n = Total number of bolts, which is not to be less than 6,

e = Mean distance of the bolt axes from the center of bolt system [mm],

k_s = Material factor for the rudder stock as given A.4.2,

k_b = Material factor for the bolts analogue to A.4.2.

2.2 The thickness of the coupling flanges is not to be less than determined by the following formula:

$$t_f = d_b \cdot \sqrt{\frac{k_f}{k_b}}$$

t_{fmin} = $0.9 \cdot d_b$

k_f = Material factor for the coupling flanges analogue to A.4.2.

d_b = bolt diameter, in mm, calculated for a number of bolts not exceeding 8.

The thickness of the coupling flanges clear of the bolt holes is not to be less than $0.65 \cdot t_f$.

The width of material between the perimeter of the bolt holes and the perimeter of the flange is not to be less than $0.67 \cdot d_b$.

2.3 The coupling flanges are to be equipped with a fitted key according to DIN 6885 or equivalent standard for relieving the bolts. The fitted key may be dispensed with if the diameter of the bolts is increased by 10 %.

2.4 Horizontal coupling flanges shall either be forged together with the rudder stock or be welded to the rudder stock as outlined in Section 20, B.4.4.3.

2.5 For the connection of the coupling flanges with the rudder body see also Section 20, B.4.4.

3. Cone Couplings

taper c on diameter of 1:8 to 1:12. The taper c is to be determiden by the formula below:

$$c = \frac{d_o - d_u}{\ell}$$

where;

d_0, d_u = Diameters, refer to Figure 18.9

ℓ = Coupling length, refer to Figure 18.9, not to be taken less than $1.5 \cdot d_o$

3.1.2 Cone coupling is to be secured by a slugging nut. The slugging nut itself is to be carefully secured, e.g. by a securing plate as shown in Figure 18.9 and the cone shapes are to fit exactly.

3.1.3 For couplings between stock and rudder, a key is to be provided, the shear area of which is not to be less than:

$$a_s = \frac{17.55 \cdot Q_F}{d_k \cdot R_{eH1}}$$

Q_F = Design yield moment of rudder stock in [Nm] according to F,

d_k = Diameter of the conical part of the rudder stock [mm] at the key,

R_{eH1} = Minimum nominal upper yield point of the key material [N/mm^2].

3.1.4 The effective surface area of the key (without rounded edges) between key and rudder stock or cone coupling is not to be less than:

$$a_k = \frac{5 \cdot Q_F}{d_k \cdot R_{eH2}}, \ [cm^2]$$

R_{eH2} = Minimum yield strength of the key, stock or coupling material in (N/mm^2], whichever is less.

3.1.5 The dimensions of the slugging nut are to be as follows, see Figure. 18.9:

3.1 Cone couplings with key

3.1.1 Cone couplings without hydraulic arrangements for mounting and dismounting the coupling is to have a

Height:

$h_n \geq 0.6 \cdot d_g$

- Outer diameter (the greater value to be taken):
- $d_n \geq 1.2 \cdot d_u$ or $d_n \geq 1.5 \cdot d_g$
- External thread diameter:

$d_g \geq 0.65 \cdot d_0$.

3.1.6 It is to be proved that 50 % of the design yield moment will be solely transmitted by friction in the cone couplings. This can be done by calculating the required push-up pressure and push-up length according to 3.2.3 for a torsional moment

$Q'_F = 0.5 \cdot Q_F$.

3.1.7 Notwithstanding the requirements in 3.1.3 and 3.1.6, where a key is fitted to the coupling between stock and rudder and it is considered that the entire rudder torque is transmitted by the key at the couplings, the scantlings of the key as well as the push-up force and push-up length are to be at the discretion of **TL**.

3.2 Cone couplings with special arrangements for mounting and dismounting the couplings

3.2.1 Where the stock diameter exceeds 200 mm. the press fit is recommended to be effected by a hydraulic pressure connection. In such cases the cone should be more slender (c ≈1:12 to ≈ 1: 20).

3.2.2 In case of hydraulic pressure connections the nut is to be effectively secured against the rudder stock or the pintle. A securing plate for securing the nut against the rudder body is not to be provided, see Figure18.10.

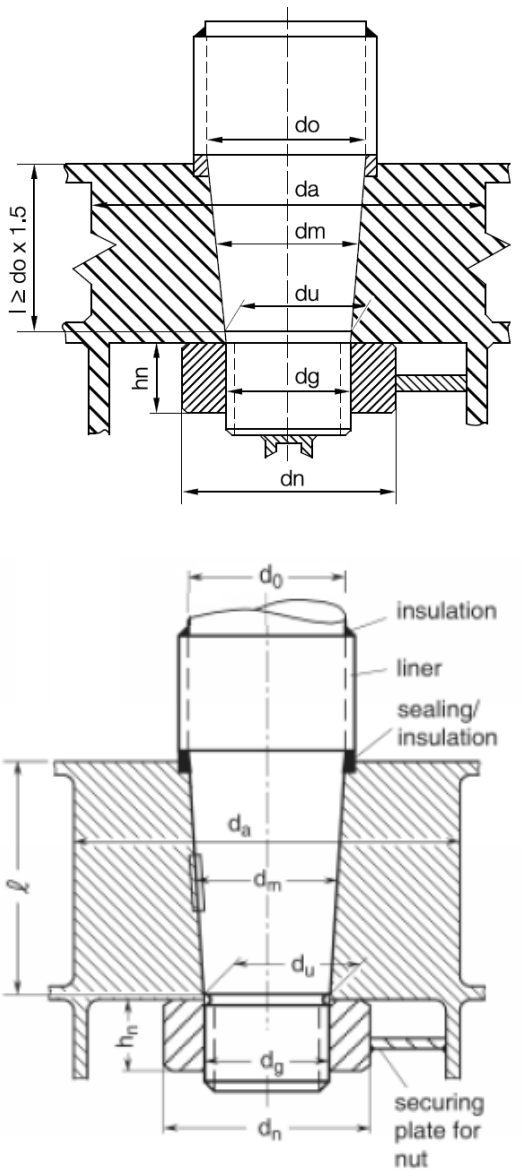

Figure 18.9 Cone coupling with key and securing plate

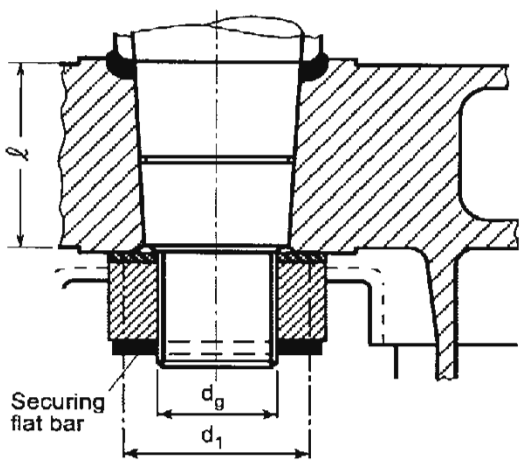

Figure 18.10 Cone coupling without key and with securing flat bar

Guidance :

A securing flat bar will be regarded as an effective securing device of the nut, if its shear area is not less than:

$$A_s = \frac{P_s \cdot \sqrt{3}}{R_{eH}} \quad [mm^2]$$

P_s = *Shear force as follows:*

$$= \frac{P_e}{2} \cdot \mu_1 \left(\frac{d_1}{d_g} - 0.6 \right) \quad [N]$$

P_e = *Push-up force according to 3.2.3.2 [N],*

μ_1 = *Frictional coefficient between nut and rudder body, normally μ_1 = 0.3,*

d_1 = *Mean diameter of the frictional area between nut and rudder body [mm] (Refer to Figure 18.10),*

d_g = *Thread diameter of the nut [mm],*

R_{eH} = *Yield point in [N/mm^2] of the securing flat bar material.*

3.2.3 For the safe transmission of the torsional moment by the coupling between rudder stock and rudder body the required push-up length and the push-up pressure are to be determined according to 3.2.3.1 and 3.2.3.2 respectively.

3.2.3.1 Push-up pressure

The push-up pressure is not to be less than the greater of the two following values:

$$p_{req1} = \frac{2 \cdot Q_F \cdot 10^3}{d_m^2 \cdot \ell \cdot \pi \cdot \mu_0} \quad [N/mm^2]$$

or

$$p_{req2} = \frac{6 \cdot M_b \cdot 10^3}{\ell^2 \cdot d_m} \quad [N/mm^2]$$

Q_F = Design yield moment of rudder stock according to F. [Nm],

d_m = Mean cone diameter [mm],

ℓ = Cone length [mm],

μ_0 ≈ 0,15 (frictional coefficient),

M_b = Bending moment in the cone coupling (e.g. case of spade rudders) [Nm].

It has to be proved that the required push-up pressure does not exceed the permissible surface pressure in the cone. The permissible surface pressure is to be determined by the following formula:

$$p_{perm} = \frac{0.8 \cdot R_{eH}(1-\alpha^2)}{\sqrt{3+\alpha^4}} \quad [N/mm^2]$$

R_{eH} = Yield point [N/mm^2] of the material of the gudgeon,

α = d_m/d_a

The outer diameter of the gudgeon should not be less than:

$d_a = 1{,}5 \cdot d_m$ [mm].

3.2.3.2 Push-up length

The push-up length $\Delta\ell$, in mm, is to comply with the following formula:

$\Delta\ell_1 \leq \Delta\ell \leq \Delta\ell_2$

$$\Delta\ell_1 = \frac{p_{req} \cdot d_m}{E\left[\frac{1-\alpha^2}{2}\right]c} + 0.8\frac{R_{tm}}{c} \quad [mm]$$

$$\Delta\ell_2 = \frac{1.6 \cdot R_{eH} \cdot d_m}{\sqrt{3+\alpha^4}\ E \cdot c} + 0.8\frac{R_{tm}}{c} \quad [mm]$$

Where;

R_{tm} = Mean roughness [mm],

R_{tm} ≈ 0.01 mm,

c = Taper on diameter according to 3.2.1,

E = Young's modulus ($2.06 \cdot 10^5$ N/mm^2).

Notwithstanding the above, the push-up length is not to be less than 2 mm.

Note :

In case of hydraulic pressure connections the required push-up force P_e for the cone may be determined by the following formula:

$$P_e = p_{req} \cdot d_m \cdot \pi \cdot \ell \cdot \left(\frac{c}{2} + 0.02\right) \ [N]$$

*The value 0,02 is a reference for the friction coefficient using oil pressure. It varies and depends on the mechanical treatment and roughness of the details to be fixed. Where due to the fitting procedure a partial push-up effect caused by the rudder weight is given, this may be taken into account when fixing the required push-up length, subject to approval by **TL**.*

3.2.4 The required push-up pressure for pintle bearings is to be determined by the following formula:

$$p_{req} = 0.4\ \frac{B_1 \cdot d_0}{d_m^2 \cdot \ell} \quad [N/mm^2]$$

B_1 = Supporting force in the pintle bearing [N], see also E.4.3

d_m, ℓ = See 3.2.3

d_0 = Pintle diameter [mm] according to Figure18.9.

The push up length is to be calculated similarly as in 3.2.3.2, using required push-up pressure and properties for the pintle bearing.

E. Rudder Body, Rudder Bearings

1. Strength of Rudder Body

1.1 The rudder force and resulting rudder torque as given in item B causes bending moments and shear forces in the rudder body, bending moments and torques in the rudder stock, supporting forces in pintle bearings and rudder stock bearings and bending moments, shear forces and torques in rudder horns and heel pieces. The rudder body is to be stiffened by horizontal and vertical webs enabling it to act as a bending girder and be effective as a beam.

1.2 The bending moments, shear forces and torques as well as the reaction forces are to be

determined by a direct calculation or by an approximate simplified method considered appropriate by **TL**. For rudders supported by sole pieces or rudder horns these structures are to be included in the calculation model in order to account for the elastic support of the rudder body. Guidelines for calculation of bending moment and shear force distribution are given in C.3.

1.3 For rudder bodies without cut-outs, the permissible stress are not to exceed the following values:

Bending stress due to M_R

$\sigma_b = 110 / k$ N/mm^2

Shear stress due to Q_1:

$\tau = 50 / k$ N/mm^2

Equivalent stress due to bending and shear:

$$\sigma_v = \sqrt{\sigma_b{}^2 + 3 \cdot \tau^2} = \frac{120}{k} \text{ N/mm}^2$$

M_R, Q_1 see C.3.3 and Figure 18.3 and 18.4.

1.4 In case of openings in the rudder plating for access to cone coupling or pintle nut the permissible stresses according to 1.5 apply. Smaller permissible stress values may be required if the corner radii are less than $0.15 \cdot h_o$ where h_o = height of opening.

1.5 In rudder bodies with cut-outs (semi-spade rudders) the following stress values are not to be exceeded:

Bending stress due to M_R:

$\sigma_b = 75$ N/mm^2

Shear stress due to Q_1:

$\tau = 50$ N/mm^2

Torsional stress due to M_t:

$\tau_t = 50$ N/mm^2

Equivalent stress due to bending and shear:

$$\sigma_{v1} = \sqrt{\sigma_b{}^2 + 3 \cdot \tau^2} = 100 \text{ N/mm}^2$$

Equivalent stress due to bending and torsion:

$$\sigma_{v2} = \sqrt{\sigma_b{}^2 + 3 \cdot \tau_t{}^2} = 100 \text{ N/mm}^2$$

M_R = Bending moment [Nm], defined as:

$$M_R = C_{R2} \cdot f_1 + B_1 \frac{f_2}{2} \quad \text{[Nm]}$$

Q_1 = Force [N], defined as:

$Q_1 = C_{R2}$ [N]

f_1, f_2 = Distances, refer to Figure 18.11.

The torsional stress may be calculated in a simplified manner as follows as a first approximation:

$$\tau_t = \frac{M_t}{2 \cdot \ell \cdot h \cdot t} \quad \text{[N/mm}^2\text{]}$$

M_t = $C_{R2} \cdot e$ [Nm],

C_{R2} = Partial rudder force [N] of the partial rudder area A_2 below the cross section under consideration,

e = Lever for torsional moment [m] (horizontal distance between the centre of pressure of area A_2 and the center line a-a of the effective cross sectional area under consideration, see Figure18.11. The centre of pressure is to be assumed at $0.33 \cdot c_2$ aft of the forward edge of area A_2, where c_2 = mean breadth of area A_2).

ℓ = Distance [cm] between the vertical webs according to Figure18.11. The distance between the vertical webs should not exceed $1.2 \cdot h$.

h = Breath [cm] of rudder half distance between the vertical webs according to Figure18.11

t = Plate thickness [cm] according to Figure18.11

The radii in the rudder plating are not to be less than 4 - 5 times the plate thickness, but in no case less than 50 mm.

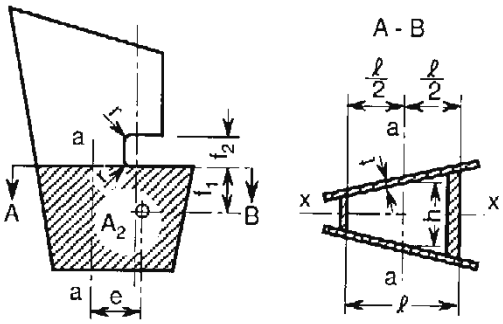

Figure 18.11 Geometry of a semi-spade rudder

2. Rudder Plating

2.1 The thickness of the rudder plating is not to be less than:

$$t = \sqrt{\frac{3.0276 \cdot a^2 \cdot (10^4 \cdot A \cdot T + C_R) \cdot k}{10^3 \cdot A}} + 2.5 \text{ [mm]}$$

However thickness value obtained by this formula is not to be less than minimum thickness given by Section 7 Item B.3.

where

a = The smaller unsupported width of a plate panel in [m].

C_R = Rudder force [N]

A = Rudder area [m^2]

The influence of the aspect ratio of the plate panels may be taken into account by the factor f_2 as given in Section 3, B.1.2.

2.2 To avoid resonant vibration of single plate fields the frequency criterion as defined in Section 12, B.5.2 (α<60°) for shell structures applies analogously.

2.3 For rudder plating in way of coupling flanges see Section 20, B.4.4.1.

2.4 For connecting the side plating of the rudder to the webs tenon welding is not to be used. Where application of fillet welding is not practicable, the side plating is to be connected by means of slot welding to flat bars which are welded to the webs.

2.5 The thickness of the webs is not to be less than 70 % of the thickness of the rudder plating according to 2.1, but not less than 8 mm.

Webs exposed to sea water must be dimensioned according to 2.1.

2.6 Single plate rudders

2.6.1 Mainpiece diameter

The mainpiece diameter is calculated according to C.1 and C.2 respectively. For spade rudders the lower third may taper down to 0.75 times stock diameter.

2.6.2 Blade thickness

The blade thickness is not to be less than:

$$t_b = 1.5 \cdot s \cdot V \cdot \sqrt{k} + 2.5 \quad \text{[mm]}$$

s = Spacing of stiffening arms in [m], not to exceed 1 m; (See Figure 18.12)

v = Speed in knots, see B.1.1.

2.6.3 Arms

The thickness of the arms is not to be less than the blade thickness

$$t_a = t_b$$

The section modulus is not to be less than

$$W_a = 0.5 \cdot s \cdot {C_1}^2 \cdot V^2 \cdot k \quad [\text{cm}^3]$$

C_1 = Horizontal distance from the aft edge of the rudder to the centreline of the rudder stock, in metres

k = Material factor as given in A.4.2 or A.4.5 respectively.

3. Transmitting of the Rudder Torque

3.1 For transmitting the rudder torque, the rudder plating according to 2.1 is to be increased by 25 % in way of the coupling. A sufficient number of vertical webs is to be fitted in way of the coupling.

3.2 If the torque is transmitted by a prolonged shaft extended into the rudder, the latter must have the diameter D_t or D_1, whichever is greater, at the upper 10 % of the intersection length. Downwards it may be tapered to 0.6 D_t, in spade rudders to 0.4 times the strengthened diameter, if sufficient support is provided for.

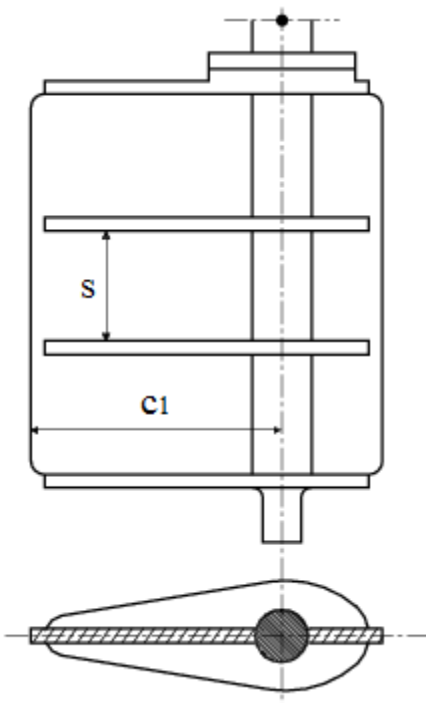

Figure 18.12 Single Plate Rudders

D_1 = Increased rudder stock diameter according to C.2.1

D_t = Diameter of the rudder stock according to C.1.1

4. Connections of rudder blade structure with solid parts

4.1 Solid parts in forged or cast steel, which house the rudder stock or the pintle, are normally to be provided with protrusions. These protrusions are not required when the web plate thickness is less than:

- 10 mm for web plates welded to the solid part on which the lower pintle of a semi-spade rudder is housed and for vertical web plates welded to the solid part of the rudder stock coupling of spade rudders.

- 20 mm for other web plates.

4.2 The solid parts are in general to be connected to the rudder structure by means of two horizontal web plates and two vertical web plates.

4.3 Minimum section modulus of the connection with the rudder stock housing

The section modulus of the cross-section of the structure of the rudder blade, in cm^3, formed by vertical web plates and rudder plating, which is connected with the solid part where the rudder stock is housed is to be not less than:

$$W_s = c_s \cdot {d_c}^3 \cdot \left(\frac{H_E - H_x}{H_E}\right) \cdot \frac{k}{k_s} \cdot 10^{-4} \quad [cm^3]$$

where:

c_S = Coefficient, to be taken equal to:

= 1.0 if there is no opening in the rudder plating or if such openings are closed by a full penetration welded plate

= 1.5 if there is an opening in the considered cross-section of the rudder

d_c = Rudder stock diameter, in [mm]

H_E = Vertical distance between the lower edge of the rudder blade and the upper edge of the solid part, in [m]

H_X = Vertical distance between the considered cross-section and the upper edge of the solid part, in [m]

k = Material factor for the rudder blade plating.

k_s = Material factor for the rudder stock as given in B.4.5.

The actual section modulus of the cross-section of the structure of the rudder blade is to be calculated with respect to the symmetrical axis of the rudder.

The breadth of the rudder plating, in m, to be considered for the calculation of section modulus is to be not greater than:

$$b = s_v + \frac{2 \cdot H_x}{3} \quad [m]$$

where:

s_V = Spacing between the two vertical webs, in [m] (refer to Figure 18.13)

Where openings for access to the rudder stock nut are not closed by a full penetration welded plate, they are to be deducted (refer to Figure 18.13).

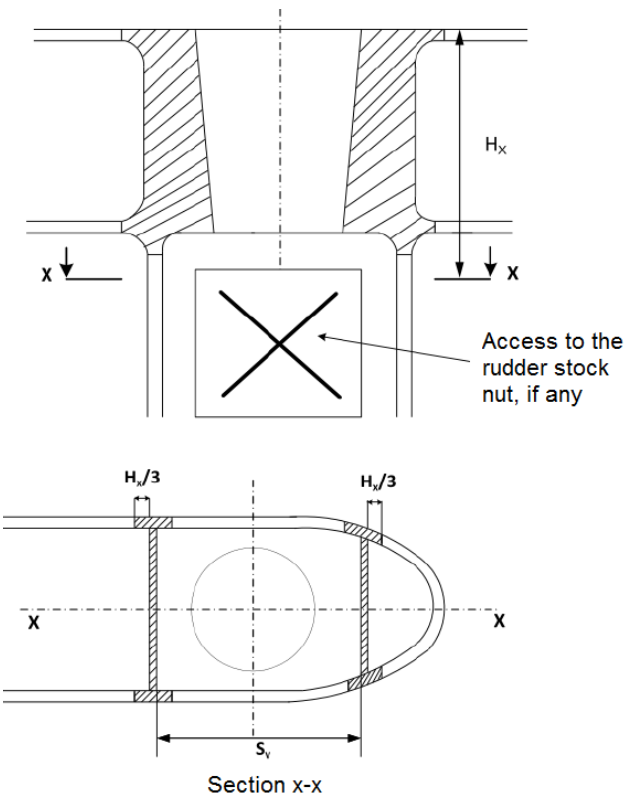

Figure 18.13 Cross-section of the connection between rudder blade structure and rudder stock housing

4.4 The thickness of the horizontal web plates connected to the solid parts, in mm, as well as that of the rudder blade plating between these webs, is to be not less than the greater of the following values:

$$t_H = 1.2 \cdot t \quad [mm]$$

$$t_H = \frac{0.045 \cdot {d_s}^2}{s_H} \quad [mm]$$

Where:

t = Defined in E.2.1

d_S = Diameter, in [mm], to be taken equal to:

= D_1, as per C.2.1, for the solid part housing the rudder stock

= d, as per G.5.1, for the solid part housing the pintle

s_H = Spacing between the two horizontal web plates, in [mm]

The increased thickness of the horizontal webs is to extend fore and aft of the solid part at least to the next vertical web.

4.5 The thickness of the vertical web plates welded to the solid part where the rudder stock is housed as well as the thickness of the rudder side plating under this solid part is to be not less than the values obtained, in mm, from Table 18.2.

The increased thickness is to extend below the solid piece at least to the next horizontal web.

5. Rudder Bearings

5.1 In way of bearings liners and bushes are to be fitted. Their minimum thickness is:

t_{min} = 8 mm. For metallic materials and synthetic material,

t_{min} = 22 mm. For lignum material,

Where in case of small ships bushes are not fitted, the rudder stock is to be suitably increased in diameter in way of bearings enabling the stock to be re-machined later.

Table 18.2 Thickness of side plating and vertical web plates

Type of rudder	Thickness of vertical web plates [mm]		Thickness of rudder plating [mm]	
	Rudder blade without opening	Rudder blade with opening	Rudder blade without opening	Area with opening
Rudder supported by sole piece	1.2 t	1.6 t	1.2 t	1.4 t
Semi-spade and spade rudders	1.4 t	2.0 t	1.3 t	1.6 t
(1) *t thickness of the rudder plating [mm] as defined in E.2.1*				

5.2 An adequate lubrication is to be provided.

5.3 The bearing forces result from the direct calculation mentioned in C.3. As a first approximation the bearing force may be determined without taking account of the elastic supports. This can be done as follows:

- **Normal rudder with two supports:**

  The rudder force C_R is to be distributed to the supports according to their vertical distances from the center of gravity of the rudder area.

- **Semi-spade rudders:**

  support force in the rudder horn: B_1

  $$B_1 = C_R \cdot b/c \text{ [N]}$$

  support force in the neck bearing: B_2

  $$B_2 = C_R - B_1 \text{ [N]}$$

For b and c see Figure10.5 in Section 10.

5.4 The projected bearing surface A_b (bearing height x external diameter of liner) is not to be less than

$$A_b = \frac{B_i}{q} \quad [mm^2]$$

B_i = Support forces [N] B_1 - B_3 according to Figure 18.3 to Figure 18.7.

q = Permissible surface pressure according to Table 18.3

5.5 Stainless and wear resistant steels, bronze and hot-pressed bronze-graphit materials have a considerable difference in potential to non-alloyed steel. Respective preventive measures are required.

Table 18.3 Permissible surface pressure q

Bearing material	q [N/mm^2]
Lignum vitae	2.5
White metal, oil lubricated	4.5
synthetic material material with hardness between 60 and 70 Shore **(1)**	5.5
Steel **(2)**, bronze and hot-pressed bronze-graphite materials	7.0

(1) *Synthetic materials to be of approved type. Indentation hardness test at 23 °C and with 50 % moisture, are to be carried out according to a recognized standard. Synthetic bearing materials are to be of an approved type. Surface pressures exceeding 5.5 N/mm^2 may be accepted in accordance with bearing manufacturer's specification and tests, but in no case more than 10 N/mm^2.*

(2) *Stainless and wear resistant steel in an approved combination with stock liner. Higher surface pressures than 7 N/mm^2 may be accepted if verified by tests.*

5.6 The bearing height shall be equal to the bearing diameter, however, is not to exceed 1.2 times the bearing diameter. Where the bearing depth is less than the bearing diameter, higher specific surface pressures may be allowed.

5.7 The length of the pintle housing in the gudgeon is not to be less than the pintle diameter d_p, d_p is to be measured on the outside of the liners.

5.8 The wall thickness of pintle bearings in sole piece and rudder horn shall be approximately 1/4 of the pintle diameter.

6. Pintles

6.1 Pintles are to have scantlings complying with the conditions given in 4.4 and 4.6. The pintle diameter is not to be less than:

$$d = 0.35\sqrt{B_1 \cdot k_r} \quad [mm]$$

B_1 = Support force in [N] in the rudder horn according to 5.3

k_r = Material factor for pintle as given in A.4.5

6.2 The thickness of any liner or bush shall not be less than determined by the following formula:

$$t = 0.01\sqrt{B_1} \quad [mm]$$

Without being less than t_{min}

B_1 = Support force in the rudder horn according to 5.3

t_{min} = Minimum thickness of bearings liners and bushes according to 5.1

6.3 Where pintles are of conical shape, their taper on diameter is to comply with the following

1:8 to 1:12 if keyed by slugging nut,

1:12 to 1:20 if mounted with oil injection and hydraulic nut.

6.4 The required push-up pressure p_{req} for pintle bearings is to be determined by the following formula:

$$P_{req} = 0.4 \cdot \frac{B_1 \cdot d_o}{{d_m}^2 \cdot \ell} \quad N/mm^2$$

B_1 = Support force in the rudder horn according to 5.3

d_0 = Pintle diameter [mm] according to Figure 18.9

d_m = Mean cone diameter [mm]

ℓ = Cone length [mm]

The push-up length is to be calculated similarly as in D.3.2.3.2 using required push-up pressure and properties for the pintle bearing.

6.5 The pintles are to be arranged in such a manner as to prevent unintentional loosening and falling out.

For nuts and threads the requirements of D.3.1.5 and 3.2.2 apply accordingly.

7. Bearing Clearances

7.1 For metallic bearing material the bearing clearance on diameter should generally not be less than:

$$= \frac{d_b}{1000} + 1.0 \quad [mm]$$

d_b = Inner diameter of bush in [mm]

7.2 If non-metallic bearing material is applied, the bearing clearance is to be specially determined considering the material's swelling and thermal expansion properties.

7.3 The clearance in no way is not to be taken less than 1.5 mm on bearing diameter unless a smaller clearance is supported by the manufacturer's recommendation and there is documented evidence of satisfactory service history with a reduced clearance.

7.4 In case only shrink fittings are employed to fit bushings, those fittings are accompanied with additional physical stoppers in order to hinder bushing from accidentally moving in vertical direction.

F. Design Yield Moment of Rudder Stock

The design yield moment of the rudder stock is to be determined by the following formula:

$$Q_F = 0.02664 \frac{D_t^3}{k_r} \quad [Nm]$$

D_t = Stock diameter in [mm] according to C.1.

Where the actual diameter D_{ta} is greater than the calculated diameter D_t, the diameter D_{ta} is to be used. However, D_{ta} need not be taken greater than 1.145 · D_t

G. Stopper, Locking Device

1. Stopper

The motions of quadrants or tillers are to be limited on either side by stoppers. The stoppers and their foundations connected to the ship's hull are to be of strong construction so that the yield point of the applied materials is not exceeded at the design yield moment of the rudder stock.

2. Locking Device

Each steering gear is to be provided with a locking device in order to keep the rudder fixed at any position. This device as well as the foundation in the ship's hull are to be of strong construction so that the yield point of the applied materials is not exceeded at the design yield moment of the rudder stock as specified in F. Where the ship's speed exceeds 12 kn, the design yield moment need only be calculated for a stock diameter based on a speed v_0 = 12 kn.

3. Regarding stopper and locking device see also Chapter 4, Section 9.

H. Propeller Nozzles

1. General

1.1 The following requirements are applicable to propeller nozzles having an inner diameter of up to 5 m. Nozzles with larger diameters will be specially considered.

1.2 Special attention is to be given to the support of fixed nozzles at the hull structure.

2. Design Pressure

The design pressure for propeller nozzles is to be determined by the following formula:

$p_d = c \cdot p_{d0}$ [kN/m^2]

$$p_{d0} = \varepsilon \frac{N}{A_p} \quad [kN/m^2]$$

N = Maximum shaft power in [kW]

A_p = Propeller disc area in [m^2],

$$A_p = D^2 \frac{\pi}{4}$$

D = Propeller diameter in [m],

ε = Factor according to the following formula:

$$\varepsilon = 0.21 - 2 \cdot 10^{-4} \frac{N}{A_p}$$

ε_{min} = 0.10

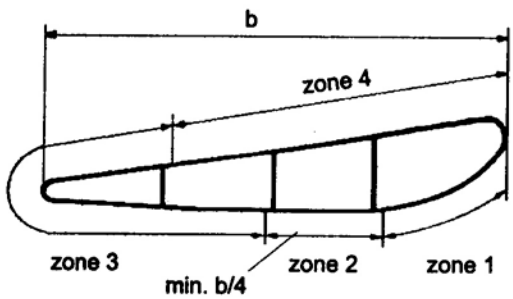

c = 1.0 in zone 2 (propeller zone),

c = 0.5 in zones 1 and 3,

c = 0.35 in zone 4.

see Figure18.14 (Length of Zone 2 should be at least b/4)

Figure 18.14 Zones 1 to 4 of a propeller nozzle

3. Plate Thickness

3.1 The thickness of the nozzle shell plating is not to be less than:

$$t = 5 \cdot a\sqrt{p_d} + t_K \quad [mm]$$

t_{min} = 7.5 mm

a = Spacing [m] of ring stiffeners

p_d = Design pressure for propeller nozzles according to H.2

t_K = Corrosion addition according to Section 3,B.8

3.2 The web thickness of the internal stiffening rings shall not be less than the nozzle plating for zone 3, however, in no case be less than 7.5 mm.

4. Section Modulus

The section modulus of the cross section shown in Figure 18.14 around its neutral axis is not to be less than:

$$W = n \cdot d^2 \cdot b \cdot v_0^2 \quad [cm^3]$$

d = Inner diameter of nozzle in [m]

b = Length of nozzle in [m]

n = 1.0 for rudder nozzles

n = 0.7 for fixed nozzles.

5. Welding

The inner and outer nozzle shell plating is to be welded to the internal stiffening rings as far as practicable by double continuous welds. Plug welding is only permissible for the outer nozzle plating.

SECTION 19

ENGINE MOUNTS AND INSTALLATION RESPECTS

A. Design Principles

1. Scope

1.1 Main and auxiliary machineries are to be so arranged as to provide passageways from the control stations and servicing flats to the means of escape from the machinery spaces and, ofcourse to easy access for maintenance, servicing and repair.

1.2 The machinery with horizontal arrangement of the shaft is to be installed parallel to the centre line of the ship. Installing such machinery in any other direction is permitted if the construction of machinery provides for operation under the conditions given in **TL**'s Chapter 4, Machinery Rules, Section 1 - General Rules and Instructions, Table 1.1 to 1.4.

1.3 The machinery for driving generators must be mounted on the same seatings as the generators.

1.4 The engine manufacturer shall not be expected to provide ambient reference conditions at test bed.

1.5 The design of the main engines intended for installation aboard single-shaft ships shall provide, as a requirement, for a possibility of emergency operation at reduced power in case of a failure of parts, the replacement of which cannot be carried out aboard the ship or demands much time.

1.6 The machinery parts that are in contact with a corrosive medium are to be made of an anticorrosive material or shall have corrosion-resistant coatings. Sea water cooling spaces of engines and the coolers are to be provided with approved protectors by **TL** surveyors.

1.7 Vibration standards of machinery are specified in the relative chapters for rigid (seatings) and yielding supports (dampers) to which machinery can be attached under shipboard conditions.

1.7.1 Rigid supports are those supports where the first natural frequency of the "support+machinery" system exceeds the basic exciting frequency (working frequency of engine speed) in the vibration measurement direction by more than 25%.

1.7.2 Yielding supports are the supports where the first natural frequency is less than 25% of the engine running speed. Yielding of the support is ensured by resilient mounting of the machinery or support (vibration insulators of various design – shock absorbers, springs, rubber insulators, etc.).

B. Seatings

1. General

1.1 The machinery and equipment constituting the propulsion plant are to be installed on strong and rigid seatings and securely attached thereto. The construction of the seatings must comply with the requirements in this section.

1.2 The main engines, their gears, thrust bearings of shafts are to be secured to seatings with fitted bolts throughout or in part. The bolts may be omitted, if appropriate stops are provided.

1.3 The bolts securing the main and auxiliary machinery and shaft bearings to their seatings, end nuts of shafts as well as bolts connecting the lengths of shafting are to be fitted with appropriate lockers against spontaneous loosening.

1.4 In the ships with double bottoms, the engines are to be seated directly upon thick inner-bottom plating or upon thick seat plates on top of heavy foundations arranged to distribute the weight effectively. Additional intercostal girders are to be fitted within the double bottom to ensure the satisfactory distribution of the weight and the rigidity of the structure.

1.5 Boilers are to be supported by deep saddle-type floors or by transverse or fore-and-aft girders arranged to distribute the weight effectively. Where they are supported by transverse saddles or girders, the floors in way of boilers are to be suitably increased in thickness and specially stiffened. Boilers are to be placed to ensure accessibility and proper ventilation. They are to be at least 460 mm clear of tank tops, bunker walls, etc.

Thickness of adjacent material is to be increased as may be required where the clear space is unavoidably less. Available clearance is to be indicated on the approval plans.

1.6 Thrust blocks are to be bolted to efficient foundations extending well beyond the thrust blocks and arranged to distribute the loads effectively into the adjacent structure. Extra intercostal girders, effectively attached, are to be fitted in way of the foundations, as may be required.

1.7 Shaft stools and auxiliary foundations are to be of ample strength and stiffness in proportion to the weight supported.

1.8 Transverse and longitudinal members supporting the seatings are to be located in line with floors and double or single bottom girders, respectively.

They are to be so arranged as to avoid discontinuity and ensure sufficient accessibility for welding of joints and for surveys and maintenance.

1.9 Where large internal combustion engines or turbines plants are fitted, seatings are to be integral with the double bottom structure. Girders supporting the bedplates in way of seatings are to be aligned with double bottom girders and are to be extended aft in order to form girders for thrust blocks.

The girders in way of seatings are to be continuous from the bedplates to the bottom shell.

1.10 Where the seatings are situated above the double bottom plating, the girders in way of seatings are to be fitted with flanged brackets, generally located at each frame and extending towards both the centre of the ship and the sides.

The extension of the seatings above the double bottom plating is to be limited as far as practicable while ensuring adequate spaces for the fitting of bedplate bolts. Bolt holes are to be located such that they do not interfere with seating structures.

1.11 For ships having a single bottom structure within the machinery space, seatings are to be located above the floors and to be adequately connected to the latter and to the girders located below.

1.12 In general, at least two girders are to be fitted in way of main machinery seatings.

One girder may be fitted only where the following three cases are complied with:

- For ships which their lengths between perpendicular less than 150 meters.

- For ships which their main engines have a maximum continuous power less than 7100 kW.

- For ships which their main engines have a power, P less than that of

$$P < 2.3 \cdot n_{MCR} \cdot L_{eff} \qquad (1)$$

Where

n_{MCR} = Rated speed of engine at maximum continuous power [rpm],

L_{eff} = Effective length of the engine foundation plate required for bolting the engine to the seating, as specified by the engine manufacturer [m].

1.13 The net scantlings of the structural elements in way of the internal combustion engine seatings are to be not less than those obtained from the formulae in Table 19.1.

1.14 Main engines and thrust bearings are to be effectively secured to the hull structure by seatings of adequate scantlings to resist the various gravitational, thrust, torque, dynamic and vibratory forces which may be imposed on them.

1.15 In determining the scantlings of seats for oil engines, the major consideration is to be given to the general rigidity of the engine itself and to its design characteristics in regard to out of balance forces. As a general guide to designers, recommended scantlings are given in Table 19.1.

Table 19.1 Minimum scantlings of the structural elements in way of machinery seatings

Scantling	Minimum value
Net cross-sectional area, A_{min} , of each bedplate of the seatings, [cm^2]	$A_{min} = 40 + 70 \frac{P}{n_{MCR} \cdot L_{eff}}$
Bedplate net thickness, t_{BP}, [mm]	Bedplates supported by 1 girder $t_{BP} = 5 + \sqrt{240 + 175 \frac{P}{n_{MCR} \cdot L_{eff}}}$
	Bedplates supported by 2 or more girders $t_{BP} = \sqrt{240 + 175 \frac{P}{n_{MCR} \cdot L_{eff}}}$
Total web thickness, t_{WT}, of girders fitted in way of machinery seatings, [mm]	Bedplates supported by 1 girder $t_{WT} = \sqrt{95 + 65 \frac{P}{n_{MCR} \cdot L_{eff}}}$
	Bedplates supported by 2 or more girders $t_{WT} = \frac{1}{n_G} \sqrt{320 + 215 \frac{P}{n_{MCR} \cdot L_{eff}}}$
Web net thickness of floors fitted in way of machinery seatings, [mm]	$t_W = \sqrt{55 + 40 \frac{P}{n_{MCR} \cdot L_{eff}}}$
n_G is the number of girders in way of the bedplate considered.	

1.16 The longitudinal girders of the engine seating are to be supported transversely by means of web frames or wing bulkheads. The scantlings of web frames are to be determined according to Section 8, C.1.6.

1.17 Top plates are to be connected to longitudinal and transverse girders thicker than approx. 15 mm. by means of a double bevel butt joint (K butt joint), (see also Section 20, B.3.2).

1.18 In the case of higher power oil engines or turbine installations the seatings should generally be integral with the double bottom structure. The tank top plating in way of the engine foundation plate or the turbine gear case and the thrust bearing should be substantially increased in thickness (*see* Figure 19.1, Type 1).

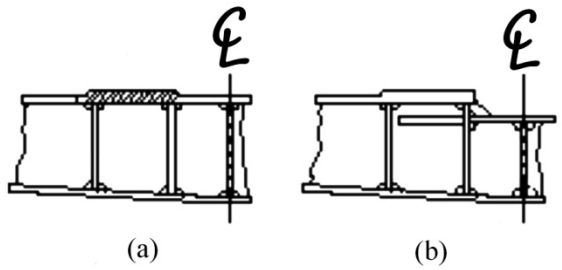

Figure 19.1 Seat integral with tank top (a) and centre recessed seat integral with tank top (b)

1.19 If the main machinery is supported on seatings of Type 2 as shown in Figure 19.2, these are to be so designed that they distribute the forces from the engine as uniformly as possible into the supporting structure. Longitudinal members supporting the seating are to be arranged in line with girders in the double bottom, and adequate transverse stiffening is to be arranged in line with floors (*see* Figure 19.2).

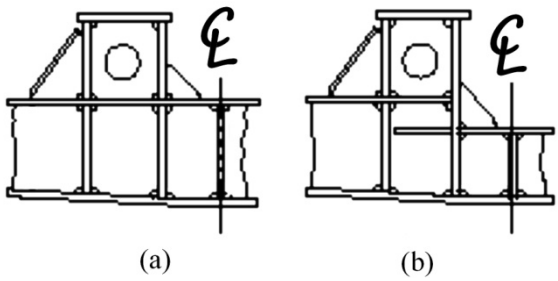

Figure 19.2 Built up seat (a) and centre recessed built-up seat (b)

1.20 In ships having open floors in the machinery space the seatings are generally to be arranged above the level of the top of floors and securely bracketed to them (*see* Figure 19.2, Type 3).

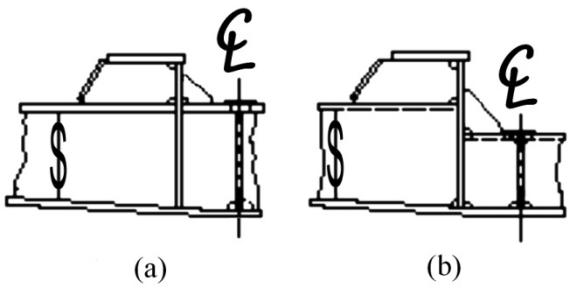

Figure 19.3 Seat with open floors (a) and centre recessed seat with open floors (b)

1.21 Side girders and brackets seemed in Figure 19.1 to 19.3 are to be used as far as possible as bearers of the main engine seatings. Side girders and brackets should be arranged as large as practicable. Where this is not feasible, additional bottom longitudinal shall be fitted with the web thickness equal to that of the side girder.

1.21.1 The engine seating girders shall extend forward and aft beyond the machinery space bulkheads for at least 3 spacing and be tapered at the end of the third spacing to floor depth.

1.21.2 The seating girders shall be reliably connected with transverse brackets fitted at every frame.

1.21.3 Seatings are permitted to be built of steel and aluminium alloys on special arrangement with **TL**.

1.21.4 For the Glass-Reinforced Plastic Vessels and Boats, the fastening of the engine bed flanges may be made by metal flats moulded into the flanges of the girders by fitting of metal angle sections bolted to the girder top edge or by other means approved by **TL**.

C. Dampers and Absorbers

1. General

1.1 Where the machinery is to be mounted on shock absorbers, the design of the latter shall be approved by **TL**.

1.2 Shock absorbing fastenings of the machinery and equipment shall:

- Maintain vibration-proof insulation properties when the absorbed machinery and equipment are operated in the ambient operation conditions as given in Table 19.1,
- Be resistant to the corrosive mediums, temperature and various kinds of radiation,
- Be equipped with the yielding grounding jumper of sufficient length to prevent radio reception interference and comply with the requirements of safety engineering,
- eliminate the interference for operation of other equipment, devices and systems.

1.3 Installation of machinery, mechanical equipment, ship arrangements and their components on plastic pads or their assembly with the use of polymeric materials is subject to special consideration by **TL**. Polymeric materials used for the pads and assembly is to be agreed with **TL**.

SECTION 20

WELDED JOINTS

Preface

The contents of this Section are very much the same as those of Chapter 3, Section 8 Rules for Welding, Welded Joints.

A. General

1. Information Contained in Manufacturing Documents

1.1 The shapes and dimensions of welds and, where proof by calculation is supplied, the requirements applicable to welded joints (the weld quality grade, detail category, are to be stated in drawings and other manufacturing documents (parts lists, welding and inspection schedules). In special cases, e.g. where special materials are concerned, the documents shall also state the welding method, the welding consumables used, heat input and control, the weld buildup and any postweld treatment which may be required.

1.2 Symbols and signs used to identify welded joints shall be explained if they depart from the symbols and definitions contained in the relevant standards (e.g. TSE, DIN standards). Where the weld preparation (together with approved methods of welding) conforms both to normal shipbuilding practice and to these Rules and recognized standards, where applicable, no special description is needed.

2. Materials, Weldability

2.1 Only base materials of proven weldability see Section 3 may be used for welded structures.

Any approval conditions of the steel and the steelmaker's recommendations are to be observed.

2.2 For ordinary hull structural steels grades A, B, D and E which have been tested by **TL**, weldability is considered to have been proven. The suitability of these base materials for high efficiency welding processes with high heat input shall be verified.

2.3 Higher tensile hull structural steels grade AH/DH/EH/FH which have been approved by **TL** in accordance with the relevant requirements of *Rules for Materials* have had their weldability examined and, provided their handling is in accordance with normal shipbuilding practice, may be considered to be proven. The suitability of these base materials for high efficiency welding processes with high heat input shall be verified.

2.4 High tensile (quenched and tempered) fine grain structural steels, low temperature steels, stainless and other (alloyed) structural steels require special approval by **TL**. Proof of weldability of the respective steel is to be presented in connection with the welding procedure and welding consumables.

2.5 Cast steel and forged parts require testing by **TL**. For castings intended to be used for welded shipbuilding structures the maximum permissible values of the chemical composition according to. **TL** Material Rules Section 7, B.4 and Table 7.1 have to be observed.

2.6 Aluminium alloys require testing by **TL**. Proof of their weldability must be presented in connection with the welding procedure and welding consumables

2.7 Welding consumables used are to be suitable for the parent metal to be welded and are to be approved by **TL**.

3. Manufacture and Testing

3.1 The manufacture of welded structural components may only be carried out in workshops or plants that have been approved. The requirements that have to be observed in connection with the fabrication of welded joints are laid down in the Chapter 3, Rules for Welding.

3.2 The weld quality grade of welded joints without proof by calculation (see 1.1) depends on the significance of the welded joint for the total structure and on its location in the structural element (location to the main stress direction) and on its stressing. For details concerning the type, scope and manner of testing, see Chapter 3, Rules for Welding. Where proof of fatigue strength is required, the details listed in Section 3, D. apply.

B. Design

1. General Design Principles

1.1 During the design stage welded joints are to be planned such as to be accessible during fabrication, to be located in the best possible position for welding and to permit the proper welding sequence to be followed.

1.2 Both the welded joints and the sequence of welding involved are to be so planned as to enable residual welding stresses to be kept to a minimum in order that no excessive deformation occurs. Welded joints should not be over dimensioned, see also 3.3.3.

1.3 When planning welded joints, it must first be established that the type and grade of weld envisaged, such as full root weld penetration in the case of HV or DHV (K) weld seams, can in fact be perfectly executed under the conditions set by the limitations of the manufacturing process involved. If this is not the case, a simpler type of weld seam shall be selected and its possibly lower load bearing capacity taken into account when dimensioning the component.

1.4 Highly stressed welded joints - which, therefore, are generally subject to examination - are to be so designed that the most suitable method of testing for faults can be used (radiography, ultrasonic, surface crack testing methods) in order that a reliable examination may be carried out.

1.5 Special characteristics peculiar to the material, such as the lower strength values of rolled material in the thickness direction (see 2.5.1) or the softening of cold worked aluminium alloys as a result of welding, are factors which have to be taken into account when designing welded joints. Clad plates where the efficiency of the bond between the base and the clad material is proved may generally be treated as solid plates (up to medium plate thicknesses where mainly filled weld connections are used).

1.6 In cases where different types of material are paired and operate in sea water or any other electrolytic medium, for example welded joints made between unalloyed carbon steels and stainless steels in the wear-resistant cladding in rudder nozzles or in the cladding of rudder shafts, the resulting differences in potential greatly increase the susceptibility to corrosion and must therefore be given special attention. Where possible, such welds are to be positioned in locations less subject to the risk of corrosion (such as on the outside of tanks) or special protective countermeasures are to be taken (such as the provision of a protective coating or cathodic protection).

2. Design Details

2.1 Stress flow, transitions

2.1.1 All welded joints on primary supporting members shall be designed to provide as smooth a stress profile as possible with no major internal or external notches, no discontinuities in rigidity and no obstructions to strains.

2.1.2 This applies in analogous manner to the welding of subordinate components on to primary supporting members whose exposed plate or flange edges should, as far as possible, be kept from notch effects due to welded attachments. Regarding the inadmissibility of weldments to the upper edge of the sheer strake, see Section 7, C.4. This applies similarly to weldments to the upper edge of continuous hatchway side coamings.

2.1.3 Butt joints in long or extensive continuous structures such as bilge keels, fenders, slop coamings, etc. attached to primary structural members are therefore to be welded over their entire cross-section.

2.1.4 Wherever possible, joints (especially site joints) in girders and sections shall not be located in areas of high bending stress. Joints at the knuckle of flanges are to be avoided.

2.1.5 The transition between differing component dimensions shall be smooth and gradual. Where the depth of web of girders or sections differs, the flanges or bulbs are to be bevelled and the web slit and expanded or pressed together to equalize the depths of the members. The length of the transition should be at least equal twice the difference in depth.

2.1.6 Where the plate thickness differs at joints perpendicularly to the direction of the main stress, differences in thickness greater than 3 mm must be

accommodated by bevelling the proud edge in the manner shown in Fig.20.1 at a ratio of at least 1: 3 or according to the notch category. Differences in thickness of 3 mm or less may be accommodated within the weld.

2.1.7 For the welding on of plates or other relatively thin-walled elements, steel castings and forgings should be appropriately tapered or provided with integrally cast or forged welding flanges in accordance with Fig.20.2.

2.1.8 For the connection of shaft brackets to the hub and shell plating, see 4.3 and Section 10, C.2. for the connection of horizontal coupling flanges to the rudder body, see 4.4. For the thickened rudder stock collar required with build-up welds and for the connection of the coupling flange, see 2.7 and Section 18, D.2.4. The joint between the rudder stock and the coupling flange must be welded over the entire cross-section.

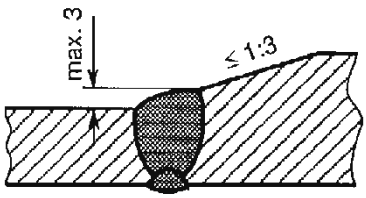

Figure 20.1 Accommodation of differences of thickness

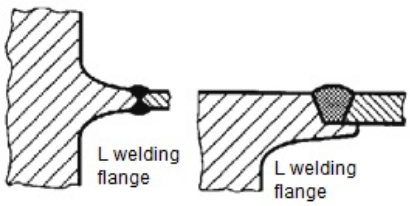

Figure 20.2 Welding flanges on steel castings or forgings

2.2 Local clustering of welds, minimum spacing

2.2.1 The local clustering of welds and short distances between welds are to be avoided. Adjacent butt welds should be separated from each other by a distance of at least

50 mm. + 4 x plate thickness.

Fillet welds should be separated from each other and from butt welds by a distance of at least

30 mm. + 2 x plate thickness.

The width of replaced or inserted plates (strips) should, however, be at least 300 mm or ten times the plate thickness, whichever is the greater.

2.2.2 Reinforcing plates, welding flanges, mountings and similar components socket-welded into plating should be of the following minimum size:

$$D_{min} = 170 + 3\,(t - 10) \geq 170 \quad [mm]$$

D = Diameter of round or length of side of angular weldments in [mm]

t = Plating thickness in [mm].

The corner radii of angular socket weldments should be 5 t in [mm], but at least 50 mm. Alternatively the “longitudinal seams” are to extend beyond “the transverse seams”. Socket weldments are to be fully welded to the surrounding plating.

Regarding the increase of stress due to different thickness of plates see also Section 3, D.5.

2.3 Welding cut-outs

2.3.1 Welding cut-outs for the (later) execution of butt or fillet welds following the positioning of transverse members should be rounded (minimum radius 25 mm. or twice the plate thickness, whichever is the greater) and should be shaped to provide a smooth transition on the adjoining surface as shown in Fig. 20.3 (especially necessary where the loading is mainly dynamic).

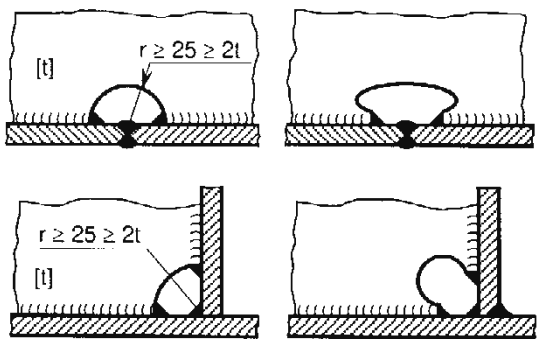

Figure 20.3 Welding out-outs

2.3.2 Where the welds are completed prior to the positioning of the crossing members, no welding cut-outs are needed. Any weld reinforcements present are to be machined off prior to the location of the crossing members or these members are to have suitable cut-outs.

2.4 Local reinforcements, doubling plates

2.4.1 Where platings (including girder plates and tube walls) are subjected locally to increased stresses, thicker plates should be used wherever possible in preference to doubling plates. Bearing bushes, hubs etc. shall invariably take the form of thicker sections welded into the plating see 2.2.2).

2.4.2 Where doublings cannot be avoided, the thickness of the doubling plates should not exceed twice the plating thickness. Doubling plates whose width is greater than approximately 30 times their thickness shall be plug welded to the underlying plating in accordance with 3.3.11 at intervals not exceeding 30 times the thickness of the doubling plate.

2.4.3 Along their (longitudinal) edges, doubling plates shall be continuously fillet welded with a throat thickness "a" of 0.3 x the doubling plate thickness. At the ends of doubling plates, the throat thickness "a" at the end faces shall be increased to 0.5 x the doubling plate thickness but shall not exceed the plating thickness see Fig.20.4.

The welded transition at the end faces of the doubling plates to the plating should form with the latter an angle of 45° or less.

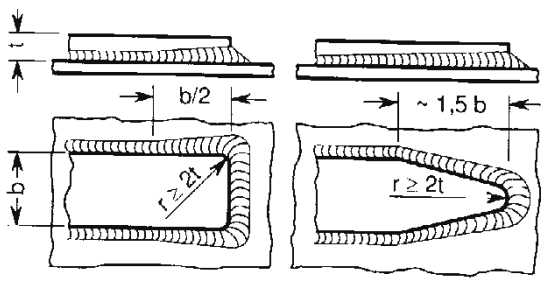

Figure 20.4 The ends of doubling plates

2.4.4 Where proof of fatigue strength is required (see Section 3, D. the configuration of the end of the doubling plate must conform to the selected detail category.

2.4.5 Doubling plates are not permitted in tanks for flammable liquids.

2.5 Intersecting members, stress in the thickness direction

2.5.1 Where, in the case of intersecting members, plates or other rolled products are stressed in the thickness direction by shrinking stresses due to the welding and/or applied loads, suitable measures shall be taken in the design and fabrication of the structures to prevent lamellar tearing (stratified fractures) due to the anisotropy of the rolled products.

2.5.2 Such measures include the use of suitable weld shapes with a minimum weld volume and a welding sequence designed to reduce transverse shrinkage. Other measures are the distribution of the stresses over a larger area of the plate surface by using a build-up weld or the joining together of several "fibers" of members stressed in the thickness direction as exemplified by the deck stringer/sheer strake joint shown in Fig.20.12.

2.5.3 Where there are very severe stresses in the thickness direction (due, for example, to the aggregate effect of the shrinkage stresses of bulky single or double-bevel butt welds plus high applied loads), it is advisable to use plates with guarantied through thickness properties (extra high-purity material and guarantied minimum reductions in area of tensile test specimens taken in thickness direction. See Rules for Welding of Hull Structures).

2.6 Welding of cold formed sections, bending radii

2.6.1 Wherever possible, welding should be avoided at the cold formed sections with more than 5 % permanent elongation and in the adjacent areas of structural steels with a tendency towards strain ageing.

Elongation ε, in the outer tensile stressed zone $= \dfrac{100}{1 + 2\ r/t}$ [%]

r = Inner bending radius in [mm]

t = Plate thickness in [mm]

2.6.2 Welding may be performed at the cold formed

sections and adjacent areas of hull structural steels and comparable structural steels (e.g. those in quality groups S...J... and S... K... to DIN EN 10025) provided that the minimum bending radii are not less than those specified in Table 20.1.

Table 20.1 Minimum inner bending radius r

Plate thickness t	Minimum inner bending radius r
to 4 mm	1,0 x t
to 8 mm	1,5 x t
to 12 mm	2,0 x t
to 24 mm	3,0 x t
over 24 mm	5,0 x t

Note:
The bending capacity of the material may necessitate a larger bending radius.

2.6.3 For other steels and other materials, where applicable, the necessary minimum bending radius shall, in case of doubt, be established by test. Proof of adequate toughness after welding may be stipulated for steels with minimum nominal upper yield point of more than 355 N/mm^2 and plate thicknesses of 30 mm. and above which have undergone cold forming resulting in 2 % or more permanent elongation.

2.7 Build-up welds on rudder stocks and pintles

2.7.1 Wear resistance and/or corrosion resistant build-up welds on the bearing surfaces of rudder stocks, pintles etc. shall be applied to a thickened collar exceeding by at least 20 mm. the diameter of the adjoining part of the shaft.

2.7.2 Where a thickened collar is impossible for design reasons, the build-up weld may be applied to the smooth shaft provided that relief-turning in accordance with 2.7.3 is possible (leaving an adequate residual diameter).

2.7.3 After welding, the transition areas between the welded and non-welded portions of the shaft shall be relief-turned with large radii, as shown in Fig. 20.5, to remove any base material whose structure close to the concave groove has been altered by the welding operation and in order to effect the physical separation of geometrical and metallurgical "notches".

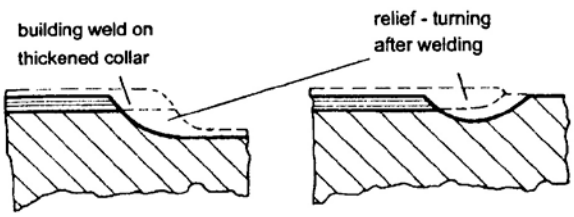

Figure 20.5 Build - up welds applied to rudder stocks and pintles

3. Weld Shapes and Dimensions

3.1 Butt joints

3.1.1 Depending on the plate thickness, the welding method and the welding position, butt joints shall be of the square, V or double-V shape conforming to the relevant standards (e.g. ISO 2553, ISO 9692-1, -2, -3 or -4). Where other weld shapes are applied, these are to be specially described in the drawings. Weld shapes for special welding processes such as single-side or electroslag welding must have been tested and approved in the context of a welding procedure test.

3.1.2 As a matter of principle, the rear sides of butt joints shall be grooved and welded with at least one capping pass. Exceptions to this rule, as in the case of submerged-arc welding or the welding processes mentioned in 3.1.1, require to be tested and approved in connection with a welding procedure test. The effective weld thickness shall be deemed to be the plate thickness, or, where the plate thicknesses differ, the lesser plate thickness. Where proof of fatigue strength is required see Section 3, D. the detail category depends on the execution (quality) of the weld.

3.1.3 Where the aforementioned conditions cannot be met, e.g. where the welds are accessible from one side only, the joints shall be executed as lesser bevelled welds with an open root and an attached or an integrally machined or cast, permanent weld pool support (backing) as shown in Fig.20.6.

3.1.4 The weld shapes illustrated in Fig.20.7 shall be used for clad plates. These weld shapes shall be used in analogous manner for joining clad plates to (unalloyed and low alloyed) hull structural steels.

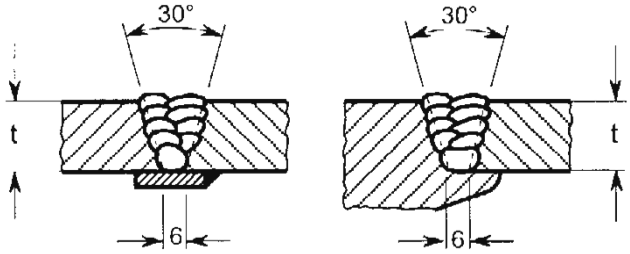

Figure 20.6 Single -side welds with permanent weld pool supports (backings)

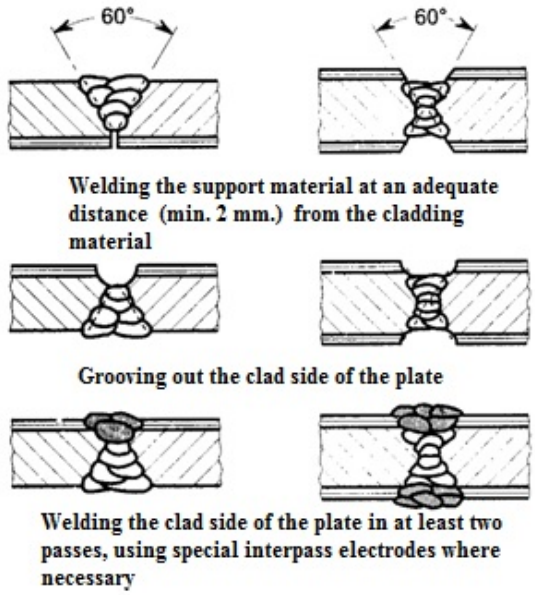

Figure 20.7 Welded shapes for welding of clad plated

3.2 Corner, T and double-T (cruciform) joints

3.2.1 Corner, T and double-T (cruciform) joints with complete union of the abutting plates shall be made as single or double-bevel welds with a minimum root face and adequate air gap, as shown in Fig.20.8, and with grooving of the root and capping from the opposite side.

The effective weld thickness shall be assumed as the thickness of the abutting plate. Where proof of fatigue strength is required see Section 3, D. the detail category depends on the execution (quality) of the weld.

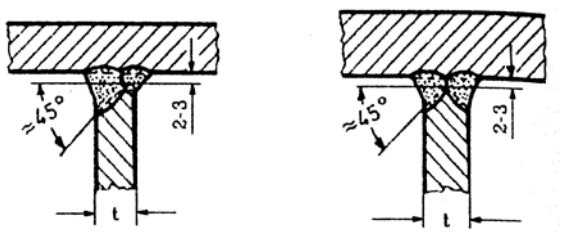

Figure 20.8 Single and double-bevel welds with full root penetration

3.2.2 Corner, T and double-T (cruciform) joints with a defined incomplete root penetration, as shown in Fig. 20.9, shall be made as single or double-bevel welds, as described in 3.2.1, with a back-up weld but without grooving of the root.

The effective weld thickness may be assumed as the thickness of the abutting plate t minus f, where f is to be assigned a value of 0.2 t subject to a maximum of 3 mm. Where proof of fatigue strength is required see Section 3, D. these welds are to be assigned to detail category 21.

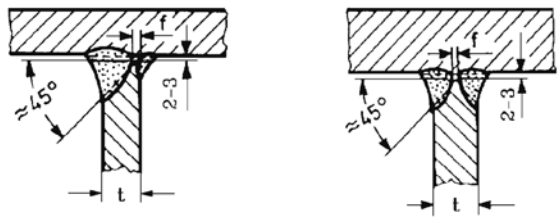

Figure 20.9 Single and double-bevel welds with defined incomplete root penetration

3.2.3 Corner, T and double-T (cruciform) joints with both an unwelded root face c and a defined incomplete root penetration f shall be made in accordance with Fig. 20.10.

The effective weld thickness shall be assumed as the thickness of the abutting plate t minus (c + f), where f is to be assigned a value of 0.2 t subject to a maximum of 3 mm. Where proof of fatigue strength is required see Section 3, D. these welds are to be assigned to types 22 or 23.

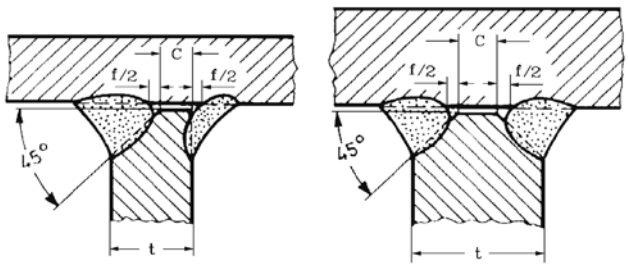

Figure 20.10 Single and double-bevel welds with unwelded root face and defined incomplete root penetration

3.2.4 Corner, T and double-T (cruciform) joints which are accessible from one side only may be made in accordance with Fig. 20.11 in a manner analogous to the butt joints referred to in 3.1.3 using a weld pool support (backing), or as single side, single bevel welds in a manner similar to those prescribed in 3.2.2.

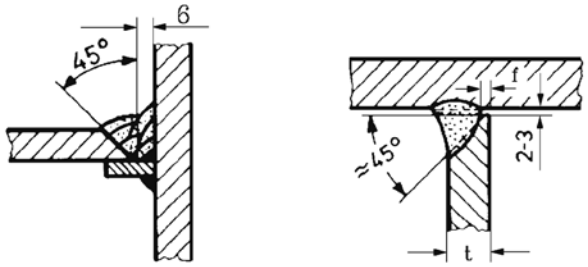

Figure 20.11 Single-side welded T joints

The effective weld thickness shall be determined by analogy with 3.1.3 or 3.2.2, as appropriate. Wherever possible, these joints should not be used where proof of fatigue strength is required see Section 3, D.

3.2.5 Where corner joints are flush; the weld shapes shall be as shown in Fig. 20.12 with bevelling of at least 30° of the vertically drawn plates to avoid the danger of lamellar tearing. A similar procedure is to be followed in the case of fitted T joints (uniting three plates) where the abutting plate is to be socketed between the aligned plates.

3.2.6 Where, in the case of T joints, the direction of the main stress lies in the plane of the horizontal plates (e.g. the plating) shown in Fig. 20.13 and where the connection of the perpendicular (web) plates is of secondary importance, welds uniting three plates may be made in accordance with Fig.20.13 (with the exception of those subjected mainly to dynamic loads).

For the root passes of the three plate weld sufficient penetration shall be achieved. Sufficient penetration has to be verified in way of the welding procedure test.

The effective thickness of the weld connecting the horizontal plates shall be determined in accordance with 3.2.2. The requisite "a" dimension is determined by the joint uniting the vertical (web) plates and shall, where necessary, be determined in accordance with Table 20.3 or by calculation as for fillet welds.

3.3 Fillet weld connections

3.3.1 In principle fillet welds are to be of the double fillet weld type. Exceptions to this rule (as in the case of closed box girders and mainly shear stresses parallel to the weld) are subject to approval in each individual case. The throat thickness "a" of the weld (the height of the inscribed isosceles triangle) shall be determined in accordance with Table 20.3 or by calculation according to C. The leg length of a fillet weld is to be not less than 1,4 times the throat thickness "a". For fillet welds at doubling plates, see 2.4.3; for the welding of the deck stringer to the sheer strake, see Section 13, and for bracket joints, see C.2.7.

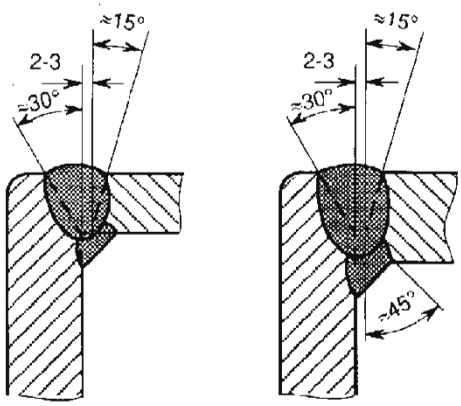

Figure 20.12 Flush fitted corner joints

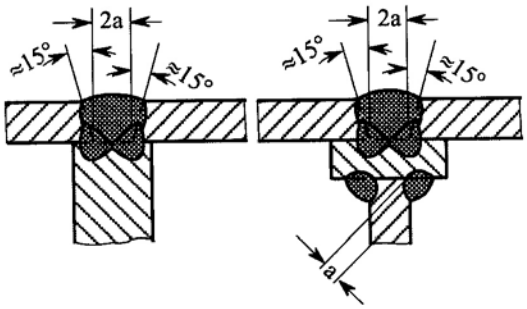

Figure 20.13 Welding together three plates

3.3.2 The relative fillet weld throat thicknesses specified in Table 20.3 relate to ordinary and higher tensile hull structural steels and comparable structural steels. They may also be generally applied to high-strength structural steels and non-ferrous metals provided that the "tensile shear strength" of the weld metal used is at least equal to the tensile strength of the base material. Failing this, the "a" dimension shall be increased accordingly and the necessary increment shall be established during the welding procedure test (see Chapter 3, Rules for Welding). Alternatively proof by calculation taking account of the properties of the weld metal may be presented.

Note:

In the case of higher-strength aluminium alloys (e.g. AlMg 4,5 Mn), such an increment may be necessary for cruciform joints subject to tensile stresses, as experience shows that in the welding procedure tests the tensile-shear strength of fillet

welds (made with matching filler metal) often fails to attain the tensile strength of the base material.

3.3.3 The throat thickness of fillet welds shall not exceed 0.7 times the lesser thickness of the parts to be connected (generally the web thickness). The minimum throat thickness is defined by the expression:

$$a_{min} = \sqrt{\frac{t_1 + t_2}{3}} \quad [mm]$$

but not less than 3 mm.

t_1 = Lesser (e.g. the web of T joint) plate thickness in [mm]

t_2 = Greater (e.g. the flange of T joint) plate thickness in [mm].

3.3.4 It is desirable that the fillet weld section shall be flat faced with smooth transitions to the base material. Where proof of fatigue strength is required see Section 3, D. machining of the weld (grinding to remove notches) may be required depending on the notch category. The weld should penetrate at least close to the theoretical root point.

3.3.5 Where mechanical welding processes are used which ensure deeper penetration extending well beyond the theoretical root point and where such penetration is uniformly and dependably maintained under production conditions, approval may be given for this deeper penetration to be allowed for in determining the throat thickness. The effective dimension:

$$a_{deep} = a + \frac{2 \cdot e_{min}}{3} \quad [mm]$$

shall be ascertained in accordance with Fig. 20.14 and by applying the term "min e" to be established for each welding process by a welding procedure test. The throat thickness shall not be less than the minimum throat thickness related to the theoretical root point.

3.3.6 When welding on top of shop primers which are particularly liable to cause porosity, an increase of the "a" dimension by up to 1 mm. may be stipulated depending on the welding process used. This is specially applicable where minimum fillet weld throat thicknesses are employed. The size of the increase shall be decided on a case to case basis considering the nature and severity of the stressing following the test results of the shop primer in accordance with the Rules for Welding of Hull Structures. This applies in analogous manner to welding processes where provision has to be made for inadequate root penetration.

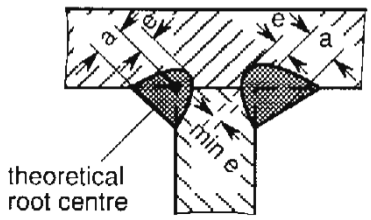

Figure 20.14 Fillet welds with increased penetration

3.3.7 Strengthened fillet welds continuous on both sides are to be used in areas subjected to severe dynamic loads (e.g. for connecting the longitudinal and transverse girders of the engine base to top plates close to foundation bolts, see Section 8, B.4.3.2.5 and Table 20.3), unless single or double bevel welds are stipulated in these locations. In these areas the "a" dimension shall equal 0.7 times the lesser thickness of the parts to be welded.

3.3.8 Intermittent fillet welds in accordance with Table 20.3 may be located opposite one another (chain intermittent welds, possibly with scallops) or may be staggered (see Fig. 20.15). In water and cargo tanks, in the bottom area of fuel oil tanks and of spaces where condensed or sprayed water may accumulate and in hollow components (e.g. rudders) threatened by corrosion, only continuous or intermittent fillet welds with scallops shall be used. This applies accordingly also to areas, structures or spaces exposed to extreme environmental conditions or which are exposed to corrosive cargo.

There shall be no scallops in areas where the plating is subjected to severe local stresses (e.g. in the bottom section of the fore ship) and continuous welds are to be preferred where the loading is mainly dynamic.

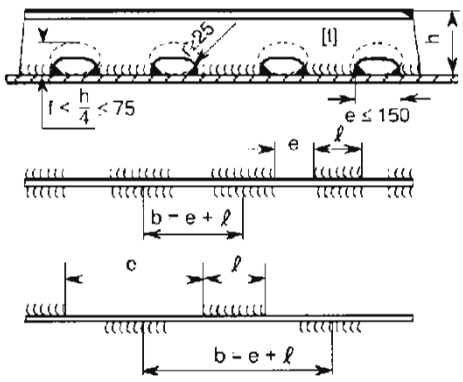

Figure 20.15 Scallop, chain and staggered welds

3.3.9 The throat thickness a_u of intermittent fillet welds is to be determined according to the selected pitch ratio b/ℓ by applying the formula:

$$a_u = 1.1 \cdot a \left[\frac{b}{\ell} \right] \quad [mm]$$

a = Required fillet weld throat thickness in [mm] for a continuous weld according to Table 20.3 or determined by calculation

b = Pitch = e + ℓ in [mm]

e = Interval between the welds in [mm]

ℓ = Length of fillet weld in [mm].

The pitch ratio b/l should not exceed 5. The maximum unwelded length (b - ℓ with scallop and chain welds, or b/2 - ℓ with staggered welds) should not exceed 25 times the lesser thickness of the parts to be welded. The length of scallops should, however, not exceed 150 mm.

3.3.10 Lap joints should be avoided wherever possible and are not to be used for heavily loaded components.

In the case of components subject to low loads lap joints may be accepted provided that, wherever possible, they are orientated parallel to the direction of the main stress. The width of the lap shall be 1.5 t + 15 mm. (t = thickness of the thinner plate). Except where another value is determined by calculation, the fillet weld throat thickness "a" shall equal 0.4 times the lesser plate thickness, subject to the requirement that it shall not be less than the minimum throat thickness required by 3.3.3. The fillet weld must be continuous on both sides and must meet at the ends.

3.3.11 In the case of plug or slot welding, the plugs should, wherever possible, take the form for elongated holes lying in the direction of the main stress. The distance between the holes and the length of the holes may be determined by analogy with the pitch "b" and the fillet weld length "l" in the intermittent welds covered by 3.3.8. The fillet weld throat thickness "a_u" may be established in accordance with 3.3.9. The width of the holes shall be equal to at least twice the thickness of the plate and shall not be less than 15 mm. The ends of the holes shall be semi-circular. Plates or sections placed underneath should at least equal the perforated plate in thickness and should project on both sides to a distance of 1.5 x the plate thickness subject to a maximum of 20 mm. Wherever possible only the necessary fillet welds shall be welded, while the remaining void is packed with a suitable filler. Lug joint welding is not allowed.

4. Welded Joints of Particular Components

4.1 Welds at the ends of girders and stiffeners

4.1.1 As shown in Fig. 20.16, the web at the end of intermittently welded girders or stiffeners is to be continuously welded to the plating or the flange plate, as applicable, over a distance at least equal to the depth "h" of the girder or stiffener subject to a maximum of 300 mm. Regarding the strengthening of the welds at the ends, extending normally over 0.15 of the span, see Table 20.3.

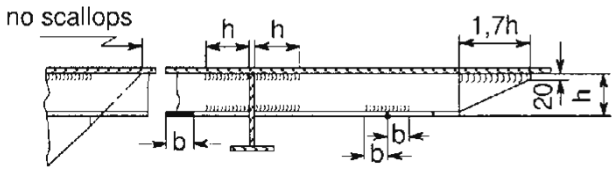

Figure 20.16 Welds at the ends of girders and stiffeners

4.1.2 The areas of bracket plates should be continuously welded over a distance at least equal to the length of the bracket plate. Scallops are to be located only beyond a line imagined as an extension of the free edge of the bracket plate.

4.1.3 Wherever possible, the free ends of stiffeners shall abut against the transverse plating or the webs of sections and girders so as to avoid stress concent-rations in the plating. Failing this, the ends of the stiffeners are to be sniped and continuously welded over a distance of at least 1.7 h subject to a maximum of 300 mm.

4.1.4 Where butt joints occur in flange plates, the flange shall be continuously welded to the web on both sides of the joint over a distance at least equal to the width of the flange.

4.2 Joints between section ends and plates

4.2.1 Welded joints connecting section ends and

plates may be made in the same plane or lapped. Where no design calculations have been carried out or stipulated for the welded connections, the joints may be made analogously to those shown in Fig.20.17.

4.2.2 Where the joint lies in the plane of the plate, it may conveniently take the form of a single-bevel butt weld with fillet. Where the joint between the plate and the section end overlaps, the fillet weld must be continuous on both sides and must meet at the ends. The necessary "a" dimension is to be calculated in accordance with C.2.6. The fillet weld throat thickness is not to be less than the minimum specified in 3.3.3.

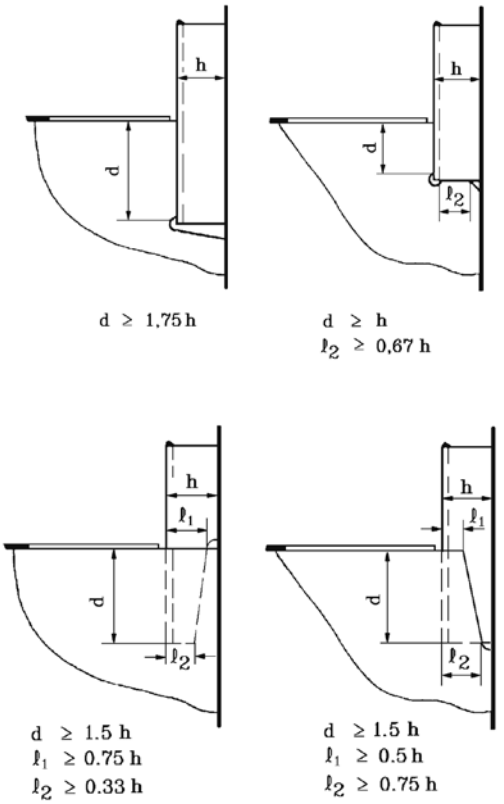

Figure 20.17 Joints uniting section ends and plates

4.3 Welded shaft bracket joints

4.3.1 Unless cast in one piece or provided with integrally cast welding flanges analogous to those prescribed in 2.1.7 (see Fig.20.18), strut barrel and struts are to be connected to each other and to the shell plating in the manner shown in Fig.20.19.

4.3.2 In the case of single-strut shaft brackets no welding is to be performed on the arm at or close to the position of constraint. Such components must be provided with integrally forged or cast welding flanges.

4.4 Rudder coupling flanges

4.4.1 Unless forged or cast steel flanges with integrally forged or cast welding flanges in conformity with 2.1.7 are used, horizontal rudder coupling flanges are to be joined to the rudder body by plates of graduated thickness and full penetration single or double-bevel welds as prescribed in 3.2.1 (see Fig.20.20). See also Section 18, D.1.4 and D.2.4.

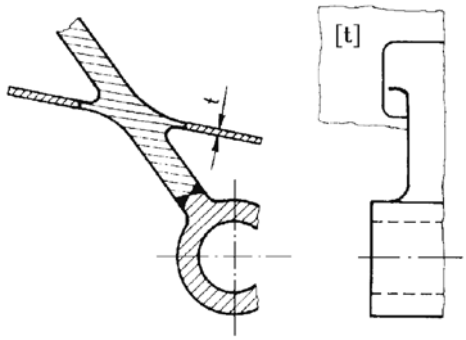

Figure 20.18 Shaft bracket with integrally cast welding flanges

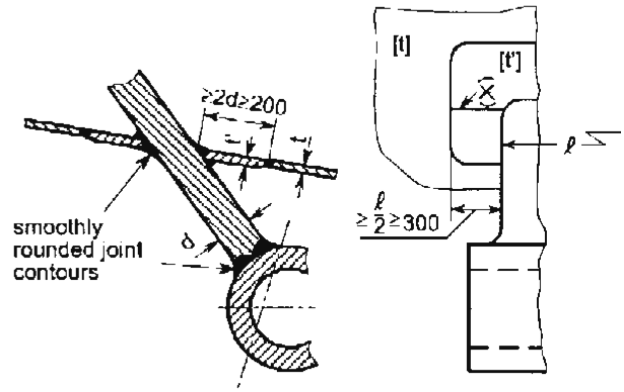

t = Plating thickness in accordance with Section 7, C.8.

$t' = \frac{d}{3} + 5 \quad [mm]$ where d < 50 mm.

$t' = 3\sqrt{d} \quad [mm]$ where d ≥ 50 mm.

For shaft brackets of elliptically shaped cross section d may be substituted by 2/3 d in the above formulae.

Figure 20.19 Shaft bracket without integrally cast welding flanges

4.4.2 Allowance shall be made for the reduced strength of the coupling flange in the thickness direction (see 1.5 and 2.5). In case of doubt, proof by calculation of the adequacy of the welded connection shall be produced.

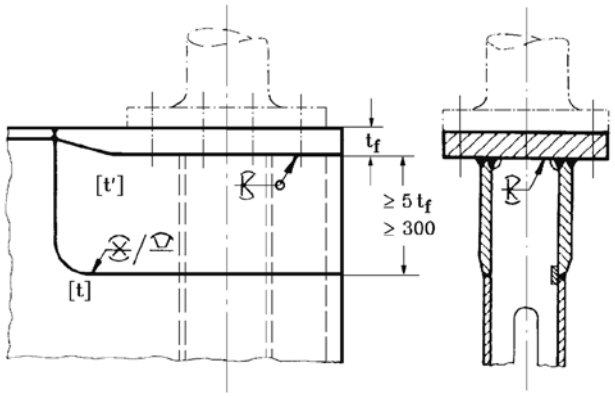

t = Plating thickness in accordance with Section 18, E.3.1 in [mm]

t_f = Actual flange thickness in [mm]

$t' = \frac{t_f}{3} + 5$ [mm] where $t_f < 50$ mm.

$t' = 3\sqrt{t_f}$ [mm] where $t_f \geq 50$ mm.

Figure 20.20 Horizontal rudder coupling flanges

4.4.3 The welded joint between the rudder stock (with thickened collar, see para. 2.1.8) and the flange shall be made in accordance with Fig. 20.21.

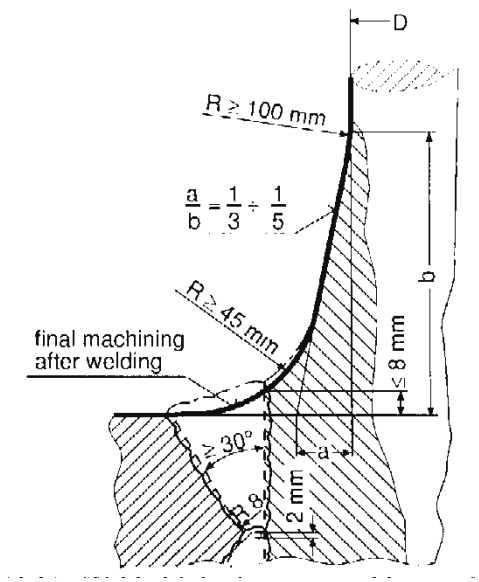

Figure 20.21 Welded joint between rudder stock and coupling flange

C. Stress Analysis

1. General Analysis of Fillet Weld Stresses

1.1 Definition of stresses

For calculation purposes, the following stresses in a fillet weld are defined (see also Fig.20.22):

$\sigma_\perp$ = Normal stresses acting vertically to the direction of the weld seam

$\tau_\perp$ = Shear stress acting vertically to the direction of the weld seam

τ_{II} = Shear stress acting in the direction of the weld seam.

Normal stresses acting in the direction of the weld seam need not be considered.

For calculation purposes the weld seam area is $a \cdot \ell$.

For reasons of equilibrium the following applies to the flank area vertical to the shaded weld seam area

$$\tau_\perp = \sigma_\perp$$

The equivalent stress is to be calculated by the following formula:

$$\sigma_v = \sqrt{\sigma_\perp^2 + \tau_\perp^2 + \tau_{II}^2}$$

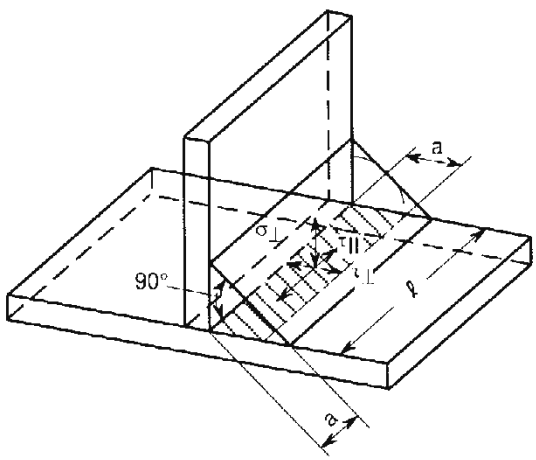

Figure 20.22 Stresses in a fillet weld

1.2 Definitions

a = Throat thickness in [mm]

ℓ = Length of fillet weld in [mm]

P = Single force in [N]

M = Bending moment at the position considered in [Nm]

Q = Shear force at the point considered in [N]

S = First moment of the cross sectional area of the flange connected by the weld to the web in relationship to the neutral beam axis in [cm^3]

I = Moment of inertia of the girder section in [cm^4]

W = Section modulus of the connected section in [cm^3]

2. Determination of Stresses

2.1 Fillet welds stressed by normal and shear forces

Flank and frontal welds are regarded as being equal for the purposes of stress analysis. In view of this, normal and shear stresses are calculated as follows:

$$\sigma = \tau = \frac{P}{\Sigma a \cdot \ell} \quad [Nmm^2]$$

Joint as shown in Fig.20.23:

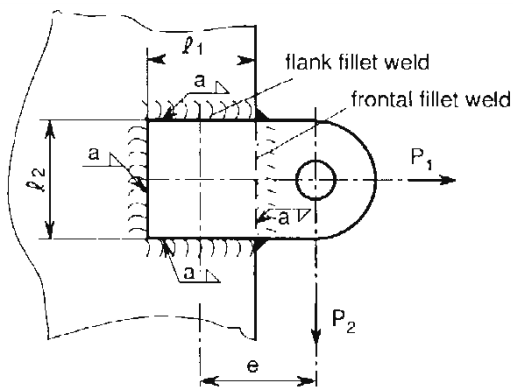

Figure 20.23 Weld joint of an overlapped lifting eye

- Stresses in frontal fillet welds:

$$\tau_\perp = \frac{P_1}{2 \cdot a \ (\ell_1 + \ell_2)} \quad [N/mm^2]$$

$$\tau_{II} = \frac{P_2}{2 \cdot a \ (\ell_1 + \ell_2)} \pm \frac{P_2 \cdot e}{2 \cdot a \cdot F_t} \quad [N/mm^2]$$

$F_t = (\ell_1 + a)\ (\ell_2 + a)$

- Stresses in flank fillet welds:

$$\tau_\perp = \frac{P_2}{2 \cdot a \ (\ell_1 + \ell_2)} \quad [N/mm^2]$$

$$\tau_{II} = \frac{P_1}{2 \cdot a \ (\ell_1 + \ell_2)} \pm \frac{P_2 \cdot e}{2 \cdot a \cdot F_t} \quad [N/mm^2]$$

ℓ_1 , ℓ_2 , e in [mm]

- Equivalent stress for frontal and flank fillet welds:

$$\sigma_v = \sqrt{\tau_\perp^2 + \tau_{II}^2}$$

Joint as shown in Fig. 20.24:

$$\tau_\perp = \frac{P_2}{2 \cdot \ell \cdot a} + \frac{3 \cdot P_1 \cdot e}{\ell^2 \cdot a} \quad [N/mm^2]$$

$$\tau_{II} = \frac{P_1}{2 \cdot \ell \cdot a} \quad [N/mm^2]$$

Equivalent stress:

$$\sigma_v = \sqrt{\tau_\perp^2 + \tau_{II}^2}$$

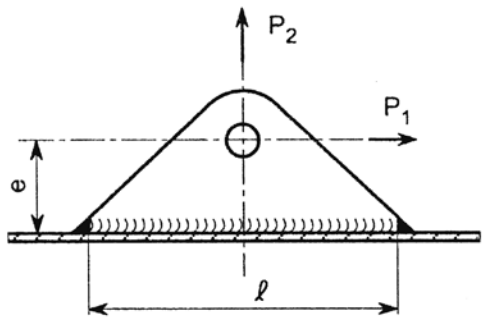

Figure 20.24 Weld joint of a vertically mounted lifting eye

2.2 Fillet weld joints stressed by bending moments and shear forces

The stresses at the fixing point of a girder are calculated

as follows (in Fig. 20.25 a cantilever beam is given as an example):

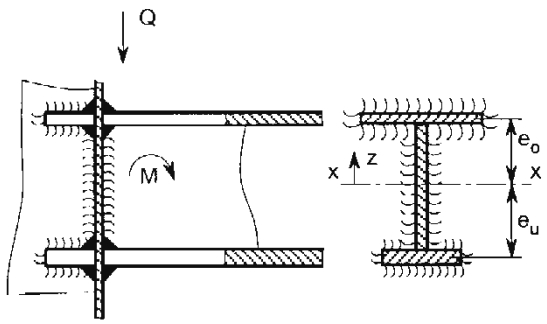

Figure 20.25 Fixing point of a cantilever beam

- Nominal stress due to bending moment:

$$\sigma_{\perp(z)} = \frac{M}{I_s} z \quad [N/mm^2]$$

$$\sigma_{\perp max} = \frac{M}{I_S} e_u \quad [N/mm^2] \qquad \text{if } e_u > e_0$$

$$\sigma_{\perp max} = \frac{M}{I_S} e_0 \quad [N/mm^2] \quad \text{if } e_u < e_0$$

- Shear stress due to shear force:

$$\tau_{ll(z)} = \frac{Q \cdot S_S(z)}{10 \cdot I_S \cdot \Sigma a} \quad [N/mm^2]$$

$$\tau_{llmax} = \frac{Q \cdot S_{smax}}{20 \cdot I_S \cdot a} \quad [N/mm^2]$$

I_s = Moment of inertia of the welded joint related to the x-axis in [cm^4]

$S_s(z)$ = The first moment of the connected weld section at the point under consideration in [cm^3]

z = Distance from the neutral axis in [cm].

- Equivalent stress:

It has to be proved that neither $\sigma_{\perp max}$ in the region of the flange nor τ_{llmax} in the region of the neutral axis nor the equivalent stress $\sigma_v = \sqrt{\sigma_\perp^2 + \tau_{ll}^2}$ exceed the permitted limits given in 2.8 at any given point. The equivalent stress σ_v should always calculated at the web-flange connection.

2.3 Fillet welded joints stressed by bending and torsional moments and shear forces

Regarding the normal and shear stresses resulting from bending, see 2.2. Torsional stresses resulting from the torsional moment M_T are to be calculated:

$$\tau = \frac{M_T \cdot 10^3}{2 \cdot a \cdot A_m} \quad [N/mm^2]$$

M_T = Torsional moment in [Nm]

A_m = Sectional area in [mm^2] enclosed by the weld seam.

The equivalent stress composed of all three components (bending, shear and torsion) is calculated by means of the following formulae:

$$\sigma_v = \sqrt{\sigma_\perp^2 + \tau_{ll}^2 + \tau_T^2} \quad [N/mm^2],$$

where τ_{ll} and τ_T have not the same direction

$$\sigma_v = \sqrt{\sigma_\perp^2 + (\tau_{ll} + \tau_T)^2} \quad [N/mm^2]$$

where τ_{ll} and τ_T have the same direction.

2.4 Continuous fillet welded joints between web and flange of bending girders

The stresses are to be calculated in way of maximum shear forces. Stresses in the weld's longitudinal direction need not to be considered. In the case of continuous double fillet weld connections the shear stress is to be calculated as follows:

$$\tau_{ll} = \frac{Q \cdot S}{20 \cdot I \cdot a} \quad [N/mm^2]$$

The fillet weld thickness required is:

$$a_{req} = \frac{Q \cdot S}{20 \cdot I \cdot \tau_{perm}} \quad [mm]$$

2.5 Intermittent fillet welded joints between web and flange of bending girders

Shear stress:

$$\tau_{ll} = \frac{Q \cdot S \cdot \alpha}{20 \cdot I \cdot a} \left[\frac{b}{\ell}\right] \quad [N/mm^2]$$

b = Pitch

α = 1.1 stress concentration factor which takes into account increases in shear stress at the ends of the fillet weld seam "ℓ".

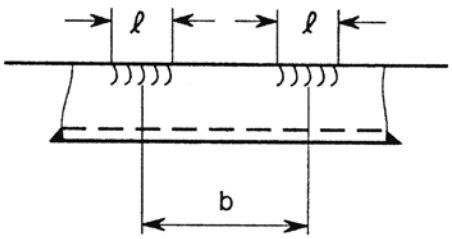

Figure 20.26 Intermittent fillet weld joint

The fillet weld thickness required is:

$$a_{req} = \frac{Q \cdot S \cdot 1.1}{20 \cdot I \cdot \tau_{perm}} \left[\frac{b}{\ell}\right] \quad [N/mm^2]$$

2.6 Fillet weld connections on overlapped profile joints

- Profiles joined by means of two flank fillet welds (see Fig.20.27):

$$\tau_{\perp} = \frac{Q}{2 \cdot a \cdot d} \quad [N/mm^2]$$

$$\tau_{ll} = \frac{M \cdot 10^3}{2 \cdot a \cdot c \cdot d} \quad [N/mm^2]$$

The equivalent stress is:

$$\sigma_v = \sqrt{\tau_{\perp}^2 + \tau_{ll}^2} \quad [N/mm^2]$$

c, d, ℓ_1, ℓ_2, r in [mm] see Fig. 20.27

$$c = r + \frac{3\,\ell_1 - \ell_2}{4} \quad [mm]$$

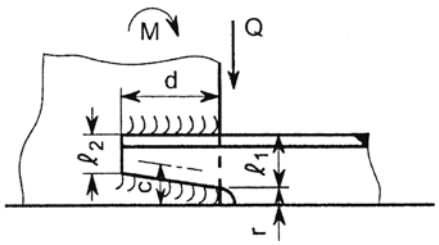

Figure 20.27 Profile joined by means of two flank fillet joints

As the influence of the shear force can generally be neglected, the required fillet weld thickness may be determined by the following formula:

$$a_{req} = \frac{W \cdot 10^3}{1{,}5 \cdot c \cdot d} \quad [mm]$$

- Profiles joined by means of two flank and two frontal fillet welds (all round welding as shown in Fig.20.28):

$$\tau_{\perp} = \frac{Q}{a\ (2\ d + \ell_1 + \ell_2)} \quad [N/mm^2]$$

$$\tau_{ll} = \frac{M \cdot 10^3}{a \cdot c\ (2\ d + \ell_1 + \ell_2)} \quad [N/mm^2]$$

The equivalent stress is:

$$\sigma_v = \sqrt{\tau_{\perp}^2 + \tau_{ll}^2}$$

$$a_{req} = \frac{W \cdot 10^3}{1{,}5 \cdot c \cdot d \left(1 + \frac{\ell_1 + \ell_2}{2\ d}\right)} \quad [mm]$$

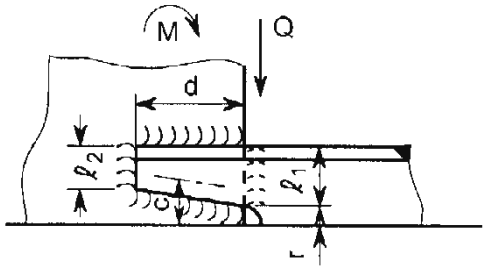

Figure 20.28 Profile joined by means of two flank and two frontal fillet welds (all round welding)

2.7 Bracket joints

Where profiles are joined to brackets as shown in Fig.20.29, the average shear stress is:

$$\tau = \frac{3 \cdot M \cdot 10^3}{4 \cdot a \cdot d^2} + \frac{Q}{2 \cdot a \cdot d} \quad [N/mm^2]$$

d = Length of overlap in [mm].

The required fillet weld thickness is to be calculated from the section modulus of the profile as follows:

$$a_{req} = \frac{1000 \cdot W}{d^2} \quad [mm]$$

(The shear force Q has been neglected.)

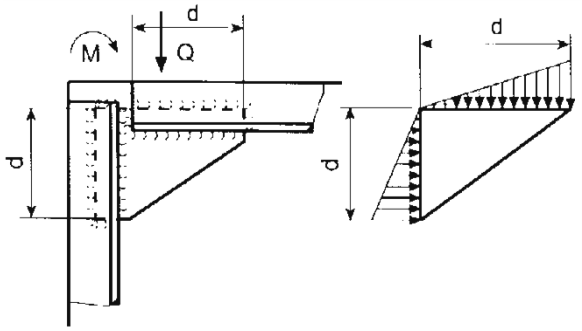

Figure 20.29 Bracket joint with idealized stress distribution resulting from the moment M and shear force Q

2.8 Permissible stresses

The permissible stresses for various materials under mainly static loading conditions are given in Table 20.2. The values listed for high tensile steels, austenitic stainless steels and aluminium alloys are based on the assumption that the strength values of the weld metal used are at least as high as those of the parent metal. If this is not the case, the "a" value calculated must be increased accordingly (see also B.3.3.2).

Table 20.2 Permissible stresses in fillet weld seams

Material		R_{eH} or $R_{p0,2}$ [N/mm^2]	Permissible stresses [N/mm^2] equivalent stress, shear stress σ_{vperm} , τ_{perm}
Normal strength hull structural steel	TL-A/B/D/E	235	115
Higher strength structural steels	TL-A/D/E/F 32	315	145
	TL-A/D/E/F 36	355	160
	TL-A/D/E/F 40	390	175
High strength steels	S 460	460	200
	S 690	685	290
Austenitic and austenitic-ferritic stainless steels	1.4306/304 L	180	
	1.4404/316 L	190	
	1.4435/316 L	190	
	1.4438/317 L	195	
	1.4541/321	205	
	1.4571/316 Ti	215	110
	1.4406/316 LN	280	
	1.4429/316 LN	295	
	1.4439/317 LN	285	130
	1.4462/318 LN	480	205
Aluminium alloys	Al Mg 3 / 5754	80 **(1)**	35
	Al Mg 4,5 Mn0.7 / 5083	125 **(1)**	56
	Al Mg Si / 6060	65 **(2)**	30
	Al Si1 Mg Mn /6082	110 **(2)**	45

(1) *Plates, soft condition*
(2) *Sections, cold hardened*

Table 20.3 Fillet Weld Connections

Structural parts to be connected	Basic thickness of fillet welds a/t_0 (1) for double continuous fillet welds (2)	Intermittent fillet welds permissible (3)
Bottom structures		
Transverse and longitudinal girders to each other	0.35	x
- to shell and inner bottom	0.20	x
Center girder to flat keel and inner bottom	0.40	
Transverse and longitudinal girders and stiffeners including shell plating in way of bottom strengthening forward	0.30	
Machinery space		
Transverse and longitudinal girders to each other	0.35	
- to shell and inner bottom	0.30	
Inner bottom to shell	0.40	
Sea chests, water side	0.50	
inside	0.30	
Machinery foundation		
Longitudinal and transverse girders to each other and to the shell	0.40	
- to inner bottom and face plates	0.40	
- to top plates	0.50 **(4)**	
- in way of foundation bolts	0.70 **(4)**	
- to brackets and stiffeners	0.30	
longitudinal girders of thrust bearing to inner bottom	0.40	
Decks		
- to shell (general)	0.40	
Deck stringer to sheerstrake (see also Section 7)	0.50	
Frames, stiffeners, beams etc.		
general	0.15	x
in peak tanks	0.30	x
bilge keel to shell	0.15	
Transverses, longitudinal and transverse girders		
general	0.15	x
within 0.15 of span from supports	0.25	
cantilevers	0.40	
pillars to decks	0.40	
Bulkheads, tank boundaries, walls of superstructures and deckhouses		
- to decks, shell and walls	0.40	
Hatch coamings		
- to deck	0.40	
- to longitudinal stiffeners	0.30	
Hatch covers		
- general	0.15	x **(5)**
- watertight or oiltight fillet welds	0.30	
Rudder plating to webs	0.25	x
Stem plating to webs	0.25	x

(1) *t_0 = Thickness of the thinner plate*

(2) *In way of large shear forces larger throat thicknesses may be required on the basis of calculations according to C.*

(3) *For intermittent welding in spaces liable to corrosion B.3.3.8 is to be observed.*

(4) *For plate thicknesses exceeding 15 mm single or double bevel butt joints to be applied.*

(5) *Excepting hatch covers above holds provided for ballast water.*

SECTION 21

STRUCTURAL FIRE PROTECTION

A. General

1. Application

1.1 These Section applies to passenger ships and cargo ships of 500 GT and over, engaged in unrestricted and **Y-K50** restricted services.

Ships other than those specified above are to comply with the specific rules and/or the requirements stated under subsection D.

1.2 Flag State rules

When flag State Administration of the ship has issued specific rules concerning with structural fire protection, **TL** may accept such rules in addition to and/or in lieu of those stated in this Section.

1.3 Definitions

See Chapter II-2, Regulation 3 of SOLAS 1974, as amended. See also UI SC239 for “A” Class Divisions.

1.4 Documents to be submitted

The following drawings and documents are to be submitted for approval:

- Structural fire protection plan,
- Fire insulation plan,
- Joiner work details,
- Ventilation and air conditioning plans,
- Fire control plan,
- Means of escape and escape route calculations,
- Evacuation analysis (only Ro-Ro passenger ships).

1.5 Approval of materials and products

The following materials and products used in fire protection are to be approved type:

- Materials having low flame-spread characteristics,
- Materials equivalent to 100 % wool of mass 0,8 kg/m^2,
- Non-combustible materials,
- Not-readily ignited materials for primary deck coverings,
- Fire doors,
- Sprinkler heads,
- Nozzles for pressure water spraying systems,
- Portable and mobile foam fire fighting systems,
- Automatic or manual fire detection systems,
- Fixed fire extinguishing systems.

B. Rules on Fire Protection for Passenger Ships

1. Materials of construction

1.1 The hull, decks, structural bulkheads, superstructures and deckhouses are to be constructed of steel or other equivalent material.

Steel or other equivalent material means any non-combustible material which, by itself or due to insulation provided, has structural and integrity properties equivalent to steel at the end of the applicable exposure to the standard fire test (e.g. aluminium alloy with appropriate insulation).

For the purpose of applying the definition of steel or other equivalent material the "applicable fire exposure" shall be according to the integrity and insulation standards given in tables 21.1 to 21.4. For example, where divisions such as decks or sides and ends of deckhouses are permitted to have "B-0" fire integrity, the "applicable fire exposure" shall be half an hour.

1.2 If aluminum alloys are used for certain structural parts of a ship, the insulation of aluminum alloy components of “A” or “B” class division, except structure which is non-load-bearing, shall be such that the temperature of the structural core does not rise more than 200º C above the ambient temperature at any time during the applicable fire exposure to the standard fire test. The insulation is to be provided on each side of the aluminium alloy parts to protect the core against fire.

Special attention shall be given to the insulation of aluminum alloy components of columns, stanchions and other structural members required to support lifeboat and life raft stowage, launching and embarkation areas, and "A" and "B" class divisions to ensure:

1.2.1 That for such members supporting lifeboat and liferaft areas and "A" class divisions, the temperature rise limitation specified in 1.2 shall apply at the end of one hour; and

1.2.2 That for such members required to support "B" class divisions, the temperature rise limitation specified in 1.2 shall apply at the end of half an hour.

1.3 Crowns and casings of machinery spaces of category A are to be of steel construction, adequately insulated (as required by Table 21.5 and 21.7) and any openings therein, if any, are to be suitably arranged and protected to prevent the spread of fire.

1.4 The floor plating of normal passageways in machinery spaces of category A shall be made of steel.

1.5 Materials readily rendered ineffective by heat shall not be used for overboard scuppers, sanitary discharges, and other outlets which are close to the waterline and where the failure of the material in the event of fire would give rise to danger of flooding.

2. Main Vertical Zones and Horizontal Zones

2.1 Ships carrying more than 36 passengers

In ships carrying more than 36 passengers, the hull, superstructures and deckhouses are to be subdivided into main vertical zones by “A-60” class divisions. Steps and recesses shall be kept to a minimum but, where they are necessary; they also are to be “A-60” class division. Where a category [5], [9] or [10] space defined in 4.2.2 is on one side of the zone division, or where fuel oil tanks are on both sides of the division, the standard may be reduced to “A-0” .

2.2 Ships carrying not more than 36 passengers

In ships carrying not more than 36 passengers, the hull, superstructures and deckhouses in way of accommodation and service spaces are to be subdivided into main vertical zones by “A” class divisions. These divisions are to have insulation values in accordance with tables 21.3 and 21.4.

2.3 Arrangement of the bulkheads forming the boundaries of the main vertical zones

As far as practicable, the bulkheads forming the boundaries of the main vertical zones above the bulkhead deck are to be in line with watertight subdivision bulkheads situated immediately below the bulkhead deck.

2.4 Length and width of main vertical zones

2.4.1 In general, the average length and width of the main vertical zone on any deck is not to exceed 40 m.

2.4.2 The length and width of main vertical zones may be extended to a maximum of 48 m. in order to bring the ends of main vertical zones to coincide with watertight subdivision bulkheads or in order to accommodate a large public space extending for the whole length of the main vertical zone provided that the total area of the main vertical zone is not greater than 1600 m^2 on any deck. The length or width of a main vertical zone is the maximum distance between the furthermost points of the bulkheads bounding it.

2.5 Extent of main vertical zone and horizontal zone

Boundary bulkheads of main vertical zone are to extend from deck to deck and to the shell or other boundaries.

Where a main vertical zone is subdivided by horizontal "A" class divisions into horizontal zones for the purpose of providing an appropriate barrier between zones of the ship with and without sprinklers, the divisions shall extend between adjacent main vertical zone bulkheads and to the shell or exterior boundaries of the ship and shall be insulated in accordance with the fire insulation and integrity values given in Table 21.4.

If a stairway serves two main vertical zones, the maximum length of one main vertical zone is to be measured from the far side of the main vertical zone stairway enclosure. In this case, all boundaries of the stairway enclosure are to be insulated as main vertical zone bulkheads and access doors leading into the stairway are to be provided from the zones (see 2.1 to 2.4). However, the stairway is not to be included in calculating the size of the main vertical zone if it is treated as its own main vertical zone. The number of main vertical zones of 48 m length is not limited as long as they comply with all the requirements. See also MSC Circ.1120 amended by MSC1. Circ 1436.

2.6 Ships designed for special purpose

On ships designed for special purposes (automobile or railroad car ferries), where the provision of main vertical zone bulkheads would defeat the purpose for which the ship is intended, equivalent means for controlling and limiting a fire are to be provided and specifically approved. Service spaces and ship stores shall not be located on ro-ro decks unless protected in accordance with the applicable regulations.

3. Bulkheads within Main Vertical Zones

3.1 Ships carrying more than 36 passengers

In ships carrying more than 36 passengers, all bulkheads which are not required to be "A" class divisions are to be at least "B" class or "C" class divisions as prescribed in Table 21.1.

3.2 Ships carrying not more than 36 passengers

In ships carrying not more than 36 passengers, all bulkheads within accommodation and service spaces not required to be “A” class divisions are to be “B” class or “C” class divisions as prescribed in Table 21.3.

3.3 Facing on “B” or “C” class divisions within main vertical zones

“B” or “C” class divisions within main vertical zones may be faced with combustible materials.

3.4 Corridor bulkheads in ships carrying not more than 36 passengers

In ships carrying not more than 36 passengers, all corridor bulkheads not required to be “A” class divisions are to be “B” class divisions extending from deck to deck except :

3.4.1 When continuous ceilings or linings are fitted on both sides of the bulkhead, the portion of the bulkhead behind the continuous ceiling or lining is to be of material which, in thickness and composition, is acceptable in the construction of a “B” class division, but which are to be required to meet “B” class integrity standards only in so far as is reasonable and practicable in the opinion of **TL**.

3.4.2 In the case of a ship protected by an automatic sprinkler system complying with the provision of the IMO’s International Fire Safety System Code (FSS Code), the corridor bulkheads may terminate at a ceiling in the corridor provided such bulkheads and ceilings are of “B” class standard. All doors and frames in such bulkheads are to be of non-combustible materials and have the same integrity as the bulkhead in which they are fitted.

3.5 Extent of “B” class divisions

Bulkheads required to be “B” class divisions, except corridor bulkheads as prescribed in item 3.4, are to extent from deck to deck and to the shell or other boundaries. However, where a continuous “B” class ceiling or lining is fitted on both sides of a bulkhead which is at least of the same fire resistance as the adjoining bulkhead, the bulkhead may terminate at the continuous ceiling or lining.

If an air gap between cabins results in an opening in the

continuous class B-15 ceiling, the bulkheads on both sides of the air gap are to be of class B 15.

4. Fire Integrity of Bulkheads and Decks

4.1 General

In addition to complying with the specific provisions for fire integrity of bulkheads and decks of passenger ships, the minimum fire integrity of all bulkheads and decks is to be as prescribed in Tables 21.1 to 21.2 for ships carrying more than 36 passengers and in Tables 21.3 to 21.4 for ships carrying not more than 36 passengers. Where, due to any particular structural arrangements in the ship, difficulty is experienced in determining from the tables the minimum fire integrity value of any division, such values are to be determined to the satisfaction of the **TL**.

4.2 Ships carrying more than 36 passengers

4.2.1 Table 21.1 are to apply to bulkheads not bounding either main vertical zones or horizontal zones. Table 21.2 are to apply to decks not forming steps in main vertical zones nor bounding horizontal zones.

4.2.2 For determining the appropriate fire integrity standards to be applied to boundaries between adjacent spaces, such spaces are classified according to their fire risk as shown in the following categories [1] to [14]. Where the contents and use of a space are such that there is a doubt as to its classification for the purpose of this regulation, or where it is possible to assign two or more classifications to a space, it is to be treated as a space within the relevant category having the most stringent boundary requirements.

Smaller, enclosed rooms within a space that have communicating openings less than 30% of total common border surface area to that space are to be considered separate spaces. The fire integrity of the boundary bulkheads of such smaller rooms are to be as prescribed in Tables 21.1 and 21.2. The title of each category is intended to be typical rather than restrictive. The number in parentheses preceding each category refers to the applicable column or row number in the tables.

[1] Control stations

- Spaces containing emergency sources of power and lighting.
- Wheelhouse and chartroom.
- Spaces containing the ship's radio equipment.
- Fire-control stations.
- Control room for propulsion machinery when located outside the propulsion machinery space.
- Spaces containing centralized fire alarm equipment.
- Spaces containing centralized emergency public address system stations and equipment.

[2] Stairways

- Interior stairways, lifts, totally enclosed emergency escape trunks and escalators (other than those wholly contained within the machinery spaces) for passengers and crew and enclosures thereto.
- In this connection, a stairway which is enclosed at only one level is to be regarded as part of the space from which it is not separated by a fire door.

[3] Corridors

- Passenger and crew corridors and lobbies.

[4] Evacuation stations and external escape routes

- Survival craft stowage area.
- Open deck spaces and enclosed promenades forming lifeboat and liferaft embarkation and lowering stations.
- Muster stations, internal and external.
- External stairs and open decks used for escape routes.

- The ship's side to the waterline in the lightest seagoing condition, superstructure and deckhouse sides situated below and adjacent to the liferaft's and evacuation slide's embarkation areas.

[5] Open deck spaces

- Open deck spaces and enclosed promenades clear of lifeboat and liferaft embarkation and lowering stations. To be considered in this category, enclosed promenades are to have no significant fire risk, meaning that furnishings are to be restricted to deck furniture. In addition, such spaces are to be naturally ventilated by permanent openings.

- Air space (the space outside superstructures and deckhouses).

Note:
See Chapter 4 Machinery Section 16 V.6 for storage of gas bottles on the open deck that are used for domestic purposes.

[6] Accommodation spaces of minor fire risk

- Cabins containing furniture and furnishings of restricted fire risk.

- Offices and dispensaries containing furniture and furnishings of restricted fire risk.

- Public spaces containing furniture and furnishings of restricted fire risk and having a deck area of less than 50 m^2.

[7] Accommodation spaces of moderate fire risk

- Spaces as in category [6] above but containing furniture and furnishings of other than restricted fire risk.

- Public spaces containing furniture and furnishings of restricted fire risk and having a deck area of 50 m^2 or more.

- Isolated lockers and small store-rooms in accommodation spaces having areas less than 4 m^2 (in which flammable liquids are not stowed).

- Motion picture projection and film stowage rooms.

- Diet kitchens (containing no open flame).

- Cleaning gear lockers (in which flammable liquids are not stowed).

- Laboratories (in which flammable liquids are not stowed).

- Pharmacies.

- Small drying rooms (having a deck area of 4 m^2 or less).

- Specie rooms.

- Operating rooms.

- Distribution boards may be located behind panels/linings within accommodation spaces including stairway enclosures, without the need to categorize the space, provided no provision is made for storage. Identifiable spaces having a deck area of less than 4 m^2 in which distribution boards are located are to be evaluated in this category.

[8] Accommodation spaces of greater fire risk

- Public spaces containing furniture and furnishings of other than restricted fire risk and having a deck area of 50 m^2 or more.

- Barber shops and beauty parlours.

- Saunas.

- Sale shops.

[9] Sanitary and similar spaces

- Communal sanitary facilities, showers, baths, water closets, etc.

- Small laundry rooms.

- In door swimming pool area.

- Isolated pantries containing no cooking appliances in accommodation spaces.

- Private sanitary facilities shall be considered a portion of the space in which they are located.

[10] Tank, voids and auxiliary machinery spaces having little or no fire risk

- Water tanks forming part of the ship's structure.

- Voids and cofferdams.

- Auxiliary machinery spaces which do not contain machinery having a pressure lubrication system and where storage of combustibles is prohibited, such as:

- Ventilation and air-conditioning rooms; windlass room; steering gear room; stabilizer equipment room; electrical propulsion motor room; rooms containing section switchboards and purely electrical equipment other than oil-filled electrical transformers (above 10 kVA); shaft alleys and pipe tunnels; spaces for pumps and refrigeration machinery (not handling or using flammable liquids).

- Closed trunks serving the spaces listed above.

- Other closed trunks such as pipe and cable trunks.

[11] Auxiliary machinery spaces, cargo spaces, cargo and other oil tanks and other similar spaces of moderate fire risk

- Cargo oil tanks.

- Cargo holds, trunkways and hatchways.

- Refrigerated chambers.

- Fuel oil tanks (where installed in a separate space with no machinery).

- Shaft alleys and pipe tunnels allowing storage of combustibles.

- Auxiliary machinery spaces as in category [10] which contain machinery having a pressure lubrication system or where storage of combustibles is permitted.

- Fuel oil filling stations.

- Spaces containing oil-filled electrical transformers (above 10 kVA).

- Spaces containing turbine and reciprocating steam engine driven auxiliary generators and small internal combustion engines of power output up to 110 kW driving generators, sprinkler, drencher or fire pumps, bilge pumps, etc.

- Closed trunks serving the spaces listed above.

[12] Machinery spaces and main galleys

- Main propulsion machinery rooms (other than electric propulsion motor rooms) and boiler rooms.

- Auxiliary machinery spaces other than those in categories [10] and [11] which contain internal combustion machinery or other oil-burning, heating or pumping units.

- Main galleys and annexes.

- Trunks and casings to the spaces listed above.

[13] Store-rooms, workshops, pantries, etc.

- Main pantries not annexed to galleys.

- Main laundry.

- Large drying rooms (having a deck area of more than 4 m^2).

- Miscellaneous stores.

- Mail and baggage rooms.

- Garbage rooms.

- Workshops (not part of machinery spaces, galleys, etc.).

- Lockers and store-rooms having areas greater than 4 m^2, other than those spaces which have provisions for the storage of flammable liquids.

[14] Other spaces in which flammable liquids are stowed

- Paint lockers

- Store-rooms containing flammable liquids (including dyes, medicines, etc.).

- Laboratories (in which flammable liquids are stowed).

4.2.3 Where a single value is shown for the fire integrity of a boundary between two spaces, that value is to apply in all cases.

4.2.4 Notwithstanding the provisions of item 3, there are no special requirements for material or integrity of boundaries where only a dash (-) appears in the tables.

4.2.5 **TL** will determine in respect of category [5] spaces whether the insulation values in Table 21.1 are to apply to ends of deckhouses and superstructures, and whether the insulation values in Table 21.2 are to apply to weather decks. In no case are the requirements of category [5] in Tables 21.1 and 21.2 necessitate enclosure of spaces which in the opinion of Society need not be enclosed.

4.2.6 Continuous "B" class ceilings or linings, in association with the relevant decks or bulkheads, may be accepted as contributing, wholly or in part, to the required insulation and integrity of a division.

4.2.7 Construction and arrangement of saunas

4.2.7.1 The perimeter of the sauna shall be of "A" class boundaries and may include changing rooms, showers and toilets. The sauna shall be insulated to "A-60" standard against other spaces except those inside of the perimeter and spaces of categories (5), (9) and (10).

4.2.7.2 Bathrooms with direct access to saunas may be considered as part of them. In such cases, the door between sauna and the bathroom need not comply with fire safety requirements.

4.2.7.3 The traditional wooden lining on the bulkheads and ceiling are permitted in the sauna. The ceiling above the oven shall be lined with a non-combustible plate with an air gap of at least 30 mm. The distance from the hot surfaces to combustible materials shall be at least 500 mm or the combustible materials shall be protected (e.g. non-combustible plate with an air gap of at least 30 mm).

4.2.7.4 The traditional wooden benches are permitted to be used in the sauna.

4.2.7.5 The sauna door shall open outwards by pushing.

4.2.7.6 Electrically heated ovens shall be provided with a timer.

4.3 Ships carrying not more than 36 passengers

4.3.1 Tables 21.3 and 21.4 are to apply to bulkheads and decks, respectively, separating adjacent spaces.

4.3.2 For determining the appropriate fire integrity standards to be applied to divisions between adjacent spaces, such spaces are classified according to their fire risk as shown in the following categories [1] to [11].

Where the contents and use of a space are such that there is a doubt as to its classification for the purpose of this regulation, or where it is possible to assign two or more classifications to a space, it is to be treated as a space within the relevant category having the most stringent boundary requirements. Smaller, enclosed rooms within a space that have less than 30 % communicating openings to that space are to be considered separate spaces. The fire integrity of the boundary bulkheads of such smaller rooms are to be as prescribed in Tables 21.3 and 21.4. The title of each category is intended to be typical rather than restrictive.

The number in parentheses preceding each category refers to the applicable column or row number in the tables.

[1] Control stations

- Spaces containing emergency sources of power and lighting.
- Wheelhouse and chartroom.
- Spaces containing the ship's radio equipment.
- Fire control stations.
- Control room for propulsion machinery when located outside the propulsion machinery space.
- Spaces containing centralized fire alarm equipment.

[2] Corridors

- Passenger and crew corridors and lobbies.

[3] Accommodation spaces

- Spaces used for public spaces, lavatories, cabins, offices, hospitals, cinemas, games and hobbies rooms, barber shops, pantries containing no cooking appliances and similar spaces.

[4] Stairways

- Interior stairways, lifts, totally enclosed emergency escape trunks and escalators (other than those wholly contained within the machinery spaces) and enclosures thereto.
- In this connection, a stairway which is enclosed only at one level shall be regarded as part of the space from which it is not separated by a fire door.

[5] Service spaces (low risk)

- Lockers and store-rooms not having provisions for the storage of flammable liquids and having areas less than 4 m^2 and drying rooms and laundries.
- Distribution boards may be located behind panels/linings within accommodation spaces including stairway enclosures, without the need to categorize the space, provided no provision is made for storage. Identifiable spaces having a deck area of less than 4 m^2 in which distribution boards are located are to be evaluated in this category.

[6] Machinery spaces of category A

- Spaces and trunks to such spaces which contain:
- Internal combustion machinery used for main propulsion; or
- Internal combustion machinery used for purposes other than main propulsion where such machinery has in the aggregate a total power output of not less than 375 kW;

  or

- Any oil-fired boiler or oil fuel unit or any oil-fired equipment other than boilers, such as inert gas generators, incinerators, etc.

[7] Other machinery spaces

- Spaces, other than machinery spaces of category A, containing propulsion machinery, boilers, oil fuel units, steam and internal combustion engines, generators and major electrical machinery, oil filling stations, refrigerating, stabilizing, ventilation and air conditioning machinery, and similar spaces, and trunks to such spaces.
- Electrical equipment rooms (auto-telephone exchange, air-conditioning duct spaces).

[8] Cargo spaces

- All spaces used for cargo (including cargo oil tanks) and trunkways and hatchways to such spaces, other than special category spaces.

[9] Service spaces (high risk)

- Galleys, pantries containing cooking appliances,

paint and lamp rooms, lockers and store-rooms having areas of 4 m^2 or more, spaces for the storage of flammable liquids, saunas and workshops other than those forming part of the machinery spaces.

[10] Open decks

- Open deck spaces and enclosed promenades having little or no fire risk. To be considered in this category, enclosed promenades are to have no significant fire risk, meaning that furnishing should be restricted to deck furniture. In addition, such spaces are to be naturally ventilated by permanent openings.

- Air spaces (the space outside superstructure and deckhouses).

Note:
See Chapter 4 Machinery Section 16 V.6 for storage of gas bottles on the open deck that are used for domestic purposes.

[11] Special category spaces and ro/ro spaces

- Ro-ro spaces are spaces not normally subdivided in any way and normally extending to either a substantial length or the entire length of the ship in which motor vehicles with fuel in their tanks for their own propulsion and/or goods (packaged or in bulk, in or on rail or road cars, vehicles (including road or rail tankers), trailers, containers, pallets, demountable tanks or in or on similar stowage units or other receptacles) can be loaded and unloaded normally in a horizontal direction.

- Special category spaces are those enclosed vehicle spaces above and below the bulkhead deck, into and from which vehicles can be driven and to which passengers have access. Special category spaces may be accommodated on more than one deck provided that the total overall clear height for vehicles does not exceed 10 m.

4.3.3 In determining the applicable fire integrity standard of a boundary between two spaces within a main vertical zone or horizontal zone which is not protected by an automatic sprinkler system complying with the provisions of IMO's International Fire Safety Systems Code (FSS Code) or between such zones, neither of which is so protected, the higher of the two values given in the tables is to apply.

4.3.4 In determining the applicable fire integrity standard of a boundary between two spaces within a main vertical zone or horizontal zone which is protected by an automatic sprinkler system complying with the provisions of FSS Code or between such zones both of which are so protected, the lesser of the two values given in the tables is to apply. Where a zone with sprinklers and a zone without sprinklers meet within accommodation and service spaces, the higher of the two values given in the tables is to apply to the division between the zones.

4.3.5 Continuous "B" class ceilings or linings

Continuous "B" class ceilings or linings, in association with the relevant decks and bulkheads, may be accepted as contributing, wholly or in part, to the required insulation and integrity of a division.

4.3.6 External boundaries

External boundaries which are required in item 1.1 to be of steel or other equivalent material may be pierced for the fitting of windows and side scuttles provided that there is no requirement for such boundaries of passenger ships to have "A" class integrity. Similarly, in such boundaries which are not required to have "A" class integrity, doors may be constructed of materials which are to the satisfaction of **TL**.

4.3.7 Saunas

Saunas shall comply with 4.2.7.

5. Protection of Stairways and Lifts in Accommodation Area

5.1 Protection of stairways

Stairways are to be within enclosures formed of "A" class division, with positive means of closure at all openings, except that:

5.1.1 A stairways connecting only two decks need not be enclosed, provided that the integrity of the pierced deck is maintained by suitable bulkheads or self-closing doors in one tween-deck space. When a

stairway is closed in one tween-deck space, the stairway enclosure is to be protected in accordance with the tables for decks.

5.1.2 Stairways may be fitted in the open in a public space, provided they lie wholly within the public space.

5.2 Direct access to stairway enclosures

Stairway enclosures in accommodation and service spaces are to have direct access from the corridors and be of sufficient area to prevent congestion, having in view the number of persons likely to use them in an emergency. Within the perimeter of such stairway enclosures, only public toilets, lockers of non-combustible material providing storage for safety equipment and open information counters are permitted. Only corridors, lifts, public toilets, special category spaces and open ro-ro spaces to which any passengers carried can have access, other escape stairways required by 17.1.5.1 and external areas are permitted to have direct access to these stairway enclosures.

Public spaces may also have direct access to stairway enclosures except for the backstage of a theatre.

Small corridors or lobbies used to separate an enclosed stairway from galleys or main laundries may have direct access to the stairway provided they have a minimum deck area of 4,5 m^2, a width of no less than 900 mm. and contain a fire hose station.

5.3 Protection of lift trunks

Lift trunks are to be so fitted as to prevent the passage of smoke and flame from one tween-deck to another and are to be provided with means of closing so as to permit the control of draught and smoke.

Machinery for lifts located within stairway enclosures is to be arranged in a separate room, surrounded by steel boundaries, except that small passages for lift cables are permitted.

Lifts which open into spaces other than corridor, public spaces, special category spaces, stairways and external areas are not to open into stairways included in the means of escape.

6. Arrangement of cabin balconies

Non-load-bearing bulkheads which separate adjacent cabin balconies are to be capable of being opened by the crew from each side for the purpose of fighting fires.

7. Protection of atriums

7.1 Atriums are to be within enclosures formed of “A” class divisions having a fire rating determined in accordance with Tables 21.2 and 21.4, as applicable.

7.2 Decks separating spaces within atriums are to have a fire rating determined in accordance with Tables 21.2 and 21.4, as applicable.

8. Penetrations in Fire-resisting Divisions and Prevention of Heat Transmission

8.1 Penetrations in “A” class divisions

Where “A” class divisions are penetrated, such penetrations are to be tested in accordance with IMO’s Fire Test Procedure Code (FTP Code 2010) subject to 12.7. In the case of ventilation ducts, item 12.3 and 12.10.1.2 apply. However, where a pipe penetration is made of steel or equivalent material having a thickness of 3 mm. or greater and a length of not less than 900 mm. (preferably 450 mm. on each side of the division), and there are no openings, testing is not required. Such penetrations are to be suitably insulated by extension of the insulation at the same level of the division.

8.2 Penetration in “B” class divisions

Where “B” class divisions are penetrated for the passage of electric cables, pipes, trunks, ducts, etc. or for fitting of ventilation terminals, lighting fixtures and similar devices, arrangements are to be made to ensure that the fire resistance is not impaired, subject to the provisions of item 12.3.1.3.

Pipes other than steel or copper that penetrate “B” class divisions are to be protected by either:

8.2.1 A fire-tested penetration device suitable for the fire resistance of the division pierced and the type of

pipe used; or

8.2.2 A steel sleeve**,** having a thickness of not less than 1.8 mm. and a length of not less than 900 mm. for pipe diameters of 150 mm. or more and not less than 600 mm. for pipe diameters of less than 150 mm. (preferably equally divided to each side of the division).

The pipe are to be connected to the ends of the sleeve by flanges or couplings; or the clearance between the sleeve and the pipe are not to exceed 2,5 mm; or any clearance between pipe and sleeve are to be made tight by means of non-combustible or other suitable material.

8.3 Pipe penetrating "A" or "B" class divisions

Uninsulated metallic pipes penetrating "A" or "B" class divisions are to be of materials having a melting temperature which exceeds 950 ºC for "A-0" and 850 ºC for "B-0" class divisions.

8.4 Prevention of heat transmission

In approving structural fire protection details, the Society are to have regard to the risk of heat transmission at intersections and terminal points of required thermal barriers. The insulation of a deck or bulkhead are to be carried past the penetration, intersection or terminal point for a distance of at least 450 mm. in the case of steel and aluminum structures. If a space is divided with a deck or a bulkhead of "A" class standard having insulation of different values, the insulation with the higher value shall continue on the deck or bulkhead with the insulation of the lesser value for a distance of at least 450 mm.

9. Openings in "A" Class Divisions

9.1 General requirements

9.1.1 Except for hatches between cargo, special category, store, baggage spaces and between such spaces and weather decks, openings are to be provided with permanently attached means of closing which are to be at least as effective for resisting fires as the divisions in which they are fitted.

9.1.2 The construction of all doors and door frames in "A" class divisions, with the means of securing them when closed, are to provide resistance to fire as well as to the passage of smoke and flame, equivalent to that of the bulkheads in which the doors are situated, this being determined in accordance with the FTP Code 2010.

Doors approved without the sill being part of the frame, which are installed on or after 1 July 2010, shall be installed such that the gap under the door does not exceed 12 mm. A non-combustible sill shall be installed under the door such that floor coverings do not extend beneath the closed door.

Such doors and door frames are to be constructed of steel or other equivalent material. Watertight doors need not be insulated.

9.1.3 It shall be possible for each door to be opened and closed from each side of the bulkhead by one person only.

9.1.4 Fire doors in main vertical zone bulkheads, galley boundaries and stairway enclosures other than power-operated watertight doors and those which are normally locked, are to satisfy the following requirements:

9.1.4.1 The doors are to be self-closing and be capable of closing against an angle of inclination of up to 3.5° opposing closure.

9.1.4.2 The approximate time of closure for hinged fire doors are to be no more than 40 s and no less than 10 s from the beginning of their movement with the ship in upright position. The approximate uniform rate of closure for sliding fire doors are to be of no more than 0,2 m/s and no less than 0,1 m/s with the ship in upright position.

9.1.4.3 The doors, except those for emergency escape trunks are to be capable of remote release from the continuously manned central control station, either simultaneously or in groups and be capable of release also individually from a position at both sides of the doors. Release switches are to have an on-off function to prevent automatic resetting of the system.

9.1.4.4 Hold-back hooks not subject to central control station release are prohibited.

Table 21.1 Bulkheads not bounding either main vertical zones or horizontal zones

Spaces		[1]	[2]	[3]	[4]	[5]	[6]	[7]	[8]	[9]	[10]	[11]	[12]	[13]	[14]
Control stations	[1]	**(1)** B-0	A-0	A-0	A-0	A-0	A-60	A-60	A-60	A-0	A-0	A-60	A-60	A-60	A-60
Stairways	[2]		**(1)** A-0	A-0	A-0	A-0	A-0	A-15	A-15	**(3)** A-0	A-0	A-15	A-30	A-15	A-30
Corridors	[3]			B-15	A-60	A-0	B-15	B-15	B-15	B-15	A-0	A-15	A-30	A-0	A-30
Evacuation stations and external escape routes	[4]					A-0	**(2)(4)** A-60	**(2)(4)** A-60	**(2)(4)** A-60	A-0 **(4)**	A-0	**(2)** A-60	**(2)** A-60	**(2)** A-60	**(2)** A-60
Open deck spaces	[5]						A-0	A-0	A-0	A-0	A-0	A-0	A-0	A-0	A-0
Accommodation spaces of minor fire risk	[6]						B-0	B-0	B-0	C	A-0	A-0	A-30	A-0	A-30
Accommodation spaces of moderate fire risk	[7]							B-0	B-0	C	A-0	A-15	A-60	A-15	A-60
Accommodation spaces of greater fire risk	[8]								B-0	C	A-0	A-30	A-60	A-15	A-60
Sanitary and similar spaces	[9]									C	A-0	A-0	A-0	A-0	A-0
Tanks, voids and auxiliary machinery spaces having little or no fire risk	[10]										**(1)** A-0	A-0	A-0	A-0	A-0
Auxiliary machinery spaces, cargo spaces, cargo and other oil tanks and other similar spaces of moderate fire risk	[11]											**(1)** A-0	A-0	A-0	A-15
Machinery spaces and main galleys	[12]												**(1)** A-0	A-0	A-60
Store-rooms, work-shops, pantries, etc.	[13]													**(1)** A-0	A-0
Other spaces in which flammable liquids are stowed	[14]														A-30

Notes to be applied to Table 21.1 to 21.2, as appropriate:

(1) *Where adjacent spaces are in the same numerical category and superscript **(1)** appears, a bulkhead or deck between such spaces need not be fitted. For example, in category [12] a bulkhead need not be required between a galley and its annexed pantries provided the pantry bulkhead and decks maintain the integrity of the galley boundaries. A bulkhead is, however, required between a galley and a machinery space even though both spaces are in category [12].*

(2) *The ship's side, to the waterline in the lightest seagoing condition, superstructure and deckhouse sides situated below and adjacent to the life rafts and evacuation slides may be reduced to "A-30".*

(3) *Where public toilets are installed completely within the stairway enclosure, the public toilet bulkhead within the stairway enclosure can be of "B" class integrity.*

(4) *Where spaces of category [6], [7], [8] and [9] are located completely within the outer perimeter of the muster station, the bulkheads of these spaces are allowed to be of ''B-O'' class integrity. Control positions for audio, video and light installations may be considered as part of the muster station.*

Table 21.2 Decks not forming steps in main vertical zones nor bounding horizontal zones

Spaces above→ **Spaces below↓**		**[1]**	**[2]**	**[3]**	**[4]**	**[5]**	**[6]**	**[7]**	**[8]**	**[9]**	**[10]**	**[11]**	**[12]**	**[13]**	**[14]**
Control stations	[1]	A-30	A-30	A-15	A-0	A-0	A-0	A-15	A-30	A-0	A-0	A-0	A-60	A-0	A-60
Stairways	[2]	A-0	A-0	-	A-0	A-0	A-0	A-0	A-0	A-0	A-0	A-0	A-30	A-0	A-30
Corridors	[3]	A-15	A-0	**(1)** A-0	A-60	A-0	A-0	A-15	A-15	A-0	A-0	A-0	A-30	A-0	A-30
Evacuation stations and external escape routes	[4]	A-0	A-0	A-0	A-0	-	A-0	A-0	A-0	A-0	A-0	A-0	A-0	A-0	A-0
Open deck spaces	[5]	A-0	A-0	A-0	A-0	-	A-0	A-0	A-0	A-0	A-0	A-0	A-0	A-0	A-0
Accommodation spaces of minor fie risk	[6]	A-60	A-15	A-0	A-60	A-0	A-0	A-0	A-0	A-0	A-0	A-0	A-0	A-0	A-0
Accommodation spaces of moderate fire risk	[7]	A-60	A-15	A-15	A-60	A-0	A-0	A-15	A-15	A-0	A-0	A-0	A-0	A-0	A-0
Accommodation spaces of greater fire risk	[8]	A-60	A-15	A-15	A-60	A-0	A-15	A-15	A-30	A-0	A-0	A-0	A-0	A-0	A-0
Sanitary and similar spaces	[9]	A-0	A-0	A-0	A-0	A-0	A-0	A-0	A-0	A-0	A-0	A-0	A-0	A-0	A-0
Tanks, voids and auxiliary machinery spaces having little or no fire risk	[10]	A-0	A-0	A-0	A-0	A-0	A-0	A-0	A-0	A-0	**(1)** A-0	A-0	A-0	A-0	A-0
Auxiliary machinery spaces, cargo spaces, cargo and other oil tanks and other similar spaces of moderate fire risk	[11]	A-60	A-60	A-60	A-60	A-0	A-0	A-15	A-30	A-0	A-0	**(1)** A-0	A-0	A-0	A-30
Machinery spaces and main galleys	[12]	A-60	A-60	A-60	A-60	A-0	A-60	A-60	A-60	A-0	A-0	A-30	**(1)** A-30	A-0	A-60
Store-rooms, work-shops, pantries, etc.	[13]	A-60	A-30	A-15	A-60	A-0	A-15	A-30	A-30	A-0	A-0	A-0	A-0	A-0	A-0
Other spaces in which flammable liquids are stowed	[14]	A-60	A-60	A-60	A-60	A-0	A-30	A-60	A-60	A-0	A-0	A-0	A-0	A-0	A-0
See Notes under Table 21.1															

Table 21.3 Fire integrity of bulkheads separating adjacent spaces

Spaces		[1]	[2]	[3]	[4]	[5]	[6]	[7]	[8]	[9]	[10]	[11]
Control stations	[1]	**(3)** A-0	A-0	A-60	A-0	A-15	A-60	A-15	A-60	A-60	**(7)**	A-60
Corridors	[2]		**(5)** C	**(5)** B-0	**(1)** A-0 **(5)** B-0	**(5)** B-0	A-60	A-0	A-0	A-15 **(4)** A-0	**(7)**	A-30 **(8)**
Accommodation spaces	[3]			**(5)** C	**(1)** A-0 **(5)** B-0	**(5)** B-0	A-60	A-0	A-0	A-15 **(4)** A-0	**(7)**	A-30 **(4)** A-0
Stairways	[4]				**(1)** A-0 **(5)** B-0	**(1)** A-0 **(5)** B-0	A-60	A-0	A-0	A-15 **(4)** A-0	**(7)** **(7)**	A-30 **(8)**
Service spaces (Low risk)	[5]					**(5)** C	A-60	A-0	A-0	A-0	**(7)**	A-0
Machinery spaces of category A	[6]						**(7)**	A-0	A-0	A-60	**(7)**	A-60
Other machinery spaces	[7]							**(2)** A-0	A-0	A-0	**(7)**	A-0
Cargo spaces	[8]								**(7)**	A-0	**(7)**	A-0
Service spaces (High risk)	[9]									**(2)** A-0	**(7)**	A-30
Open decks	[10]										-	A-0
Special category spaces and ro-ro cargo spaces	[11]											A-30 **(8)**

Notes to be applied to Tables 21.3 and 21.4, as appropriate:

(1) *For clarification as to which applies see item 3. and 5.*

(2) *Where spaces are of the same numerical category and **(2)** appears, a bulkhead or deck of the ratings shown in the tables in only required when the adjacent spaces are for a different purpose, e.g. in category [9]. A galley next to a galley does not require a bulkhead but a galley next to a paint room requires an "A-0" bulkhead.*

(3) *Bulkheads separating the wheelhouse and chartroom from each other may be "B-0" rating. No fire rating is required for those partitions separating the navigation bridge and the safety centre when the latter is within the navigation bridge.*

(4) *In determining the applicable fire integrity standard of a boundary between two spaces within a main vertical zone or horizontal zone which is not protected by an automatic sprinkler system complying with the provisions of the FSS Code or between such zones neither of which is so protected, the higher of the two values given in the tables shall apply.*

In determining the applicable fire integrity standard of a boundary between two spaces within a main vertical zone or horizontal zone which is protected by an automatic sprinkler system complying with the provisions of the FSS Code or between such zones both of which are so protected, the lesser of the two values given in the tables shall apply. Where a zone with sprinklers and a zone without sprinklers meet within accommodation and service spaces, the higher of the two values given in the tables shall apply to the division between the zones.

(5) *For the application of item 2.2,"B-0" and "C", where appearing in Table 21.3, shall be read as "A-0".*

(6) *Fire insulation need not be fitted if the machinery space of category [7], in the opinion of the Administration, has little or no fire risk.*

(7) *Where **(7)** appears in the tables, the division is required to be of steel or other equivalent material but is not required to be of "A" class standard.*

*However, where a deck, except in a category (10) space, is penetrated for the passage of electric cables, pipes and vent ducts, such penetrations should be made tight to prevent the passage of flame and smoke. Divisions between control stations (emergency generators) and open decks may have air intake openings without means for closure, unless a fixed gas fire-fighting system is fitted.For the application of item 2.2 a where **(7)** appears in Table 21.4, except for categories [8] and [10], shall be read as "A-0".*

(8) *Ships constructed before 1 July 2014 shall comply, as a minimum, with the previous requirements applicable at the time the ship was constructed, as specified in SOLAS Chapter II-2, Regulation 1.2.*

Table 21.4 Fire integrity of decks separating adjacent spaces

Spaces above → **Space below ↓**		**[1]**	**[2]**	**[3]**	**[4]**	**[5]**	**[6]**	**[7]**	**[8]**	**[9]**	**[10]**	**[11]**
Control stations	[1]	A-0	A-0	A-0	A-0	A-0	A-60	A-0	A-0	A-0	**(7)**	A-60 **(8)**
Corridors	[2]	A-0	**(7)**	**(7)**	A-0	**(7)**	A-60	A-0	A-0	A-0	**(7)**	A-30 **(8)**
Accommodation spaces	[3]	A-60	A-0	**(7)**	A-0	**(7)**	A-60	A-0	A-0	A-0	**(7)**	A-30 **(4)** A-0
Stairways	[4]	A-0	A-0	A-0	**(7)**	A-0	A-60	A-0	A-0	A-0	**(7)**	A-30 **(8)**
Service spaces (Low risk)	[5]	A-15	A-0	A-0	A-0	**(7)**	A-60	A-0	A-0	A-0	**(7)**	A-0
Machinery spaces of category A	[6]	A-60	A-60	A-60	A-60	A-60	**(7)**	**(6)** A-60	A-30	A-60	**(7)**	A-60
Other machinery spaces	[7]	A-15	A-0	A-0	A-0	A-0	A-0	**(7)**	A-0	A-0	**(7)**	A-0
Cargo spaces	[8]	A-60	A-0	A-0	A-0	A-0	A-0	A-0	**(7)**	A-0	**(7)**	A-0
Service spaces (High risk)	[9]	A-60	A-30 **(4)** A-0	A-30 **(4)** A-0	A-30 **(4)** A-0	A-0	A-60	A-0	A-0	A-0	**(7)**	A-30
Open decks	[10]	**(7)**	**(7)**	**(7)**	**(7)**	**(7)**	**(7)**	**(7)**	**(7)**	**(7)**	-	A-0
Special category spaces	[11]	A-60	A-30 **(8)**	A-30 **(4)** A-0	A-30 **(8)**	A-0	A-60 **(8)**	A-0	A-0	A-30	A-0	A-30 **(8)**

See notes under Table 21.3.

9.1.4.5 A door closed remotely from the central control station shall be capable of being re-opened at both sides of the door by local control. After such local opening, the door shall automatically close again.

9.1.4.6 Indication shall be provided at the fire door indicator panel in the continuously manned central control station whether each door is closed.

9.1.4.7 The release mechanism are to be so designed that the door will automatically close in the event of disruption of the control system or main source of electric power.

9.1.4.8 Local power accumulators for power-operated doors shall be provided in the immediate vicinity of the doors to enable the doors to be operated at least ten times (fully opened and closed) after disruption of the control system or main source of electric power using the local controls.

9.1.4.9 Disruption of the control system or main source of electric power at one door are not to impair the safe functioning of the other doors.

9.1.4.10 Remote-released sliding or power-operated doors are to be equipped with an alarm that sounds for at least 5 s but no more than 10 s after the door is released from the central control station and before the door begins to move and continue sounding until the door is completely closed.

9.1.4.11 A door designed to re-open upon contacting an object in its path are to re-open not more than 1 m. from the point of contact.

necessary to their fire integrity are to have a latch that is automatically activated by the operation of the doors when released by the system.

9.1.4.13 Doors giving direct access to special category spaces which are power - operated and automatically closed need not be equipped with the alarms and remote-release mechanisms required in 9.1.4.3 and 9.1.4.10.

9.1.4.14 The components of the local control system shall be accessible for maintenance and adjusting.

9.1.4.15 Power-operated doors are to be provided with a control system of an approved type which shall be able to operate in case of fire in accordance with the FTP Code 2010. This system shall satisfy the following requirements:

9.1.4.15.1 The control system are to be able to operate the door at the temperature of at least 200°C for at least 60 min. served by the power supply;

9.1.4.15.2 The power supply for all other doors not subject to fire are not to be impaired; and

9.1.4.15.3 At temperatures exceeding 200°C, the control system are to be automatically isolated from the power supply and be capable of keeping the door closed up to at least 945°C.

9.1.4.16 Watertight doors below bulkhead deck, which also serve as fire doors are not to be closed automatically in case of fire detection.

9.2 Requirements for glass partitions, windows and side scuttles

The requirements for "A" class integrity of the outer boundaries of a ship are not to apply to glass partitions, windows and side scuttles, provided that there is no requirement for such boundaries to have “A” class integrity in 11.3. The requirements for “A” class integrity of the outer boundaries of the ship are not to apply to exterior doors, except for those in superstructures and deckhouses facing life-saving appliances, embarkation and external muster station areas, external stairs and open decks used for escape routes. Stairway enclosure doors need not meet this requirement.

9.3 Self-closing hose ports

Except for watertight, weathertight doors (semi-watertight doors), doors leading to the open deck and doors which need to be reasonably gastight, all "A" class doors located in stairways, public spaces and main vertical zone bulkheads in escape routes are to be equipped with a self-closing hose port. The material, construction and fire resistance of the hose port are to be equivalent to the door into which it is fitted, and are to be a 150 mm. square clear opening with the door closed and are to be inset into the lower edge of the door, opposite the door hinges, or in the case of sliding doors, nearest the openings.

9.4 Requirements for ships carrying not more than 36 passengers

In ships carrying not more than 36 passengers, where a space is protected by an automatic sprinkler fire detection and fire alarm system complying with theprovisions of the FSS Code or fitted with a continuous “B” class ceiling, openings in decks not forming steps in main vertical zones nor bounding horizontal zones are to be closed reasonably tight and such decks are to meet the “A” class integrity requirements in so far as reasonable and practicable in the opinion of **TL**.

10. Openings in "B" Class Divisions

Balancing openings or ducts between two enclosed spaces are prohibited except for openings as permitted in 10.1 to 10.3.

10.1 Doors and door frames

10.1.1 Doors and door frames in "B" class divisions and means of securing them are to provide a method of closure which are to have resistance to fire equivalent to that of the divisions, this being determined in accordance with th FTP Code 2010, except that ventilation openings may be permitted in the lower portion of such doors. Where such opening is in or under a door the total net area of any such opening or openings are not to exceed 0.05 m^2. Alternatively, a non-combustible air balance duct routed between the cabin and the corridor, and located below the sanitary unit is permitted where the cross-sectional area of the duct does not exceed 0.05 m^2. All ventilation openings are to be fitted with a grill made of non-combustible material. Doors shall be non-combustible.

Doors approved without the sill being part of the frame, which are installed on or after 1 July 2010, shall be installed such that the gap under the door does not exceed 25 mm.

10.1.2 Cabin doors in "B" class divisions are to be of a self-closing type. Hold-back hooks are not permitted.

10.2 Requirements for glass partitions, windows and side scuttles

The requirements for "B" class integrity of the outer boundaries of a ship are not to apply to glass partitions, windows and side scuttles. Similarly, the requirements for "B" class integrity are not to apply to exterior doors in superstructures and deckhouses.

10.3 Requirements for ships carrying not more than 36 passengers

10.3.1 For ships carrying not more than 36 passengers, **TL** may permit the use of combustible materials in doors separating cabins from the individual interior sanitary spaces such as showers.

10.3.2 In ships carrying not more than 36 passengers, where an automatic sprinkler system complying with the provisions of the FSS Code is fitted :

10.3.2.1 Opening in decks not forming steps in main vertical zones nor bounding horizontal zones are to be closed reasonably tight and such decks are to meet the “B” class integrity requirements in so far as is reasonable and practicable in the opinion of the Society.

10.3.2.2 Openings in corridor bulkheads of “B” class materials are to be protected in accordance with the provisions of item 3.

11. Windows and Side Scuttles

11.1 Construction

All windows and side scuttles in bulkheads within accommodation and service spaces and control stations other than those to which the provisions of item 9.2 and 10.2 apply, are to be so constructed as to preserve the integrity requirements of the type of bulkheads in which they are fitted, this being determined in accordance with the FTP Code 2010.

11.2 Frames of windows and sidescuttles

Notwithstanding the requirements of the Tables 21.1 to 21.4, all windows and side scuttles in bulkheads separating accommodation and service spaces and control stations from weather are to be constructed with frames of steel or other suitable material. The glass shall be retained by a metal glazing bead or angle.

11.3 Windows facing life-saving appliances, embarkation and assembly stations and open decks used for escape routes

Windows facing life-saving appliances, embarkation and muster stations, external stairs and open decks used for escape routes, and windows situated below liferaft and escape slide embarkation areas are to have the fire integrity as required in the Tables 21.1 and 21.2. Where automatic dedicated sprinkler heads are provided for windows (see also TL Rules Chapter 4 Machinery Section 18), “A-0” windows may be accepted as equivalent. To be considered under this paragraph, the sprinkler heads are to either be :

- Dedicated heads located above windows, and installed in addition to the conventional ceiling sprinklers; or

- Conventional ceiling sprinkler heads arranged such that the window is protected by an average application rate of at least 5 l/min/m^2 and the additional window area is included in the calculation of the area of coverage; or

- Water mist nozzles that have been tested and approved in accordance with the guidelines by IMO **(1).**

Windows located in the ship’s side below the lifeboat embarkation area shall have fire integrity at least equal to "A-0" class

(1) *Refer to the Revised Guidelines for approval of sprinkler systems equivalent to that referred to in SOLAS regulation II-2/12 (resolution A. 800 (19)).*

12. Ventilation Systems

12.1 Ventilation ducts, in general (2)

12.1.1 In all passenger ships, ventilation ducts, including single and double wall ducts, are to be of steel or equivalent material except flexible bellows constructed of short length not exceeding 600 mm used for connecting fans to the ducting in air-conditioning rooms.

Note: Unless expressly provided otherwise in paragraph 12.1.6, any other material used in the construction of ducts, including insulation, are to also be non-combustible.

Short ducts, not generally exceeding 2 m in length and with a free cross-sectional area **(3)** not exceeding 0.02 m^2, need not be of steel or equivalent material, subject to the following conditions:

12.1.1.1 The ducts are to be made of non-combustible material, which may be faced internally and externally with membranes having low flame-spread characteristics **(4)** which is type approved and, in each case, a calorific value **(5)** not exceeding 45 MJ/m^2 of their surface area for the thickness used;

12.1.1.2 The ducts are only used at the end of the ventilation device; and

12.1.1.3 The ducts are not situated less than 600 mm, measured along the duct, from an opening in an "A" or "B" class division, including continuous "B" class ceiling.

12.1.2 The following arrangements are to be tested in accordance with the Fire Test Procedures Code:

12.1.2.1 Fire dampers, including their relevant means of operation, however, the testing is not required for dampers located at the lower end of the duct in exhaust ducts for galley ranges, which must be of steel and capable of stopping the draught in the duct; and

12.1.2.2 Duct penetrations through "A" class divisions. However, the test is not required where steel sleeves are directly joined to ventilation ducts by means of riveted or screwed connections or by welding.

12.1.3 Fire dampers are to be easily accessible. Where they are placed behind ceilings or linings, these ceilings or linings are to be provided with an inspection hatch on which the identification number of the fire damper is marked. The fire damper identification number is to also be marked on any remote controls provided.

12.1.4 Ventilation ducts are to be provided with hatches for inspection and cleaning. The hatches are to be located near the fire dampers.

12.1.5 The main inlets and outlets of ventilation systems are to be capable of being closed from outside the spaces being ventilated. The means of closing are to be easily accessible as well as prominently and permanently marked and are to indicate the operating position of the closing device.

12.1.6 Combustible gaskets in flanged ventilation duct connections are not permitted within 600 mm of openings in "A" or "B" class divisions and in ducts required to be of "A" class construction.

12.1.7 Ventilation openings or air balance ducts between two enclosed spaces are to not be provided except as permitted by B 10.1.

---

(2) *With respect only to 12.1, a ventilation duct made of material other than steel may be considered equivalent to a ventilation duct made of steel, provided the material is non-combustible and has passed a standard fire test in accordance with Annex 1: Part 3 of the FTP Code as non-load bearing structure for 30 minutes following the requirements for testing "B" class divisions.*

(3) *The term free cross-sectional area means, even in the case of a pre-insulated duct, the area calculated on the basis of the inner dimensions of the duct itself and not the insulation.*

(4) *Reference is made to the Fire Test Procedure Code, Annex 1, Part 5, adopted by IMO by Resolution MSC.61(67). On ships constructed on or after 1 July 2012, the new Fire Test Procedure Code, adopted by IMO by Resolution MSC.307(88), is applicable.*

(5) *Refer to the recommendations published by the International Organization for Standardization, in particular publication ISO 1716:2002, Reaction to the fire tests for building products – Determination of the heat of combustion.*

12.2 Arrangement of ducts

12.2.1 The ventilation systems for machinery spaces of category A, vehicle spaces, ro-ro spaces, galleys, special category spaces and cargo spaces are to, in general, be separated from each other and from the ventilation systems serving other spaces. However, the galley ventilation systems in passenger ships carrying not more than 36 passengers need not be completely separated from other ventilation systems, but may be served by separate ducts from a ventilation unit serving other spaces. For ships carrying not more than 36 passengers, in such a case (for any duct section), an automatic fire damper is to be fitted in the galley ventilation duct near the ventilation unit. See Figure 21.1.

12.2.2 Ducts provided for the ventilation of machinery spaces of category A, galleys, vehicle spaces, ro-ro spaces or special category spaces are to not pass through accommodation spaces, service spaces, or control stations unless they comply with paragraph 12.2.4.

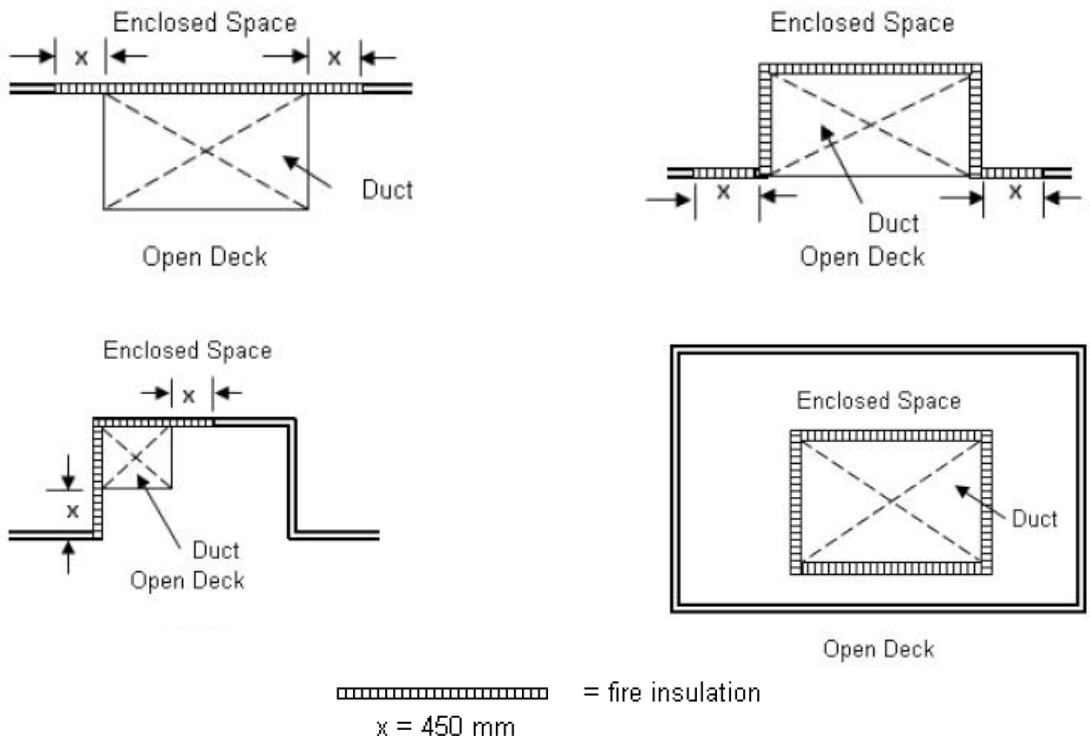

Figure 21.1 Examples of galley ducts contiguous to enclosed space

12.2.3 Ducts provided for the ventilation of accommodation spaces, service spaces or control stations are to not pass through machinery spaces of category A, galleys, vehicle spaces, ro-ro spaces or special category spaces unless they comply with paragraph 12.2.4.

Note: *For determining fire insulation for trunks and ducts which pass through an enclosed space, the term "pass through" referred to in items 12.2.2, 12.2.3 and 12.2.5 pertains to the part of the trunk/duct contiguous to the enclosed space. See Figure 21.1.*

12.2.4 As permitted by paragraphs 12.2.2 and 12.2.3 ducts are to be either:

12.2.4.1.1 Constructed of steel having a thickness of at least 3 mm for ducts with a free cross-sectional area of less than 0.075 m^2, at least 4 mm for ducts with a free cross-sectional area of between 0.075 m^2 and 0.45 m^2, and at least 5 mm for ducts with a free cross-sectional area of over 0.45 m^2;

12.2.4.1.2 Suitably supported and stiffened;

12.2.4.1.3 Fitted with automatic fire dampers close to the boundaries penetrated; and

12.2.4.1.4 Insulated to "A-60" class standard from the boundaries of the spaces they serve to a point at least 5 m beyond each fire damper; or

12.2.4.2.1 Constructed of steel in accordance with paragraphs 12.2.4.1.1 and 12.2.4.1.2; and

12.2.4.2.2 Insulated to "A-60" class standard throughout the spaces they pass through, except for ducts that pass through spaces of category (9) or (10) as defined in item B.4.2.2.

12.2.5 For the purposes of paragraphs 12.2.4.1.4 and 12.2.4.2.2, ducts are to be insulated over their entire cross-sectional external surface. Ducts that are outside but adjacent to the specified space, and share one or more surfaces with it, are to be considered to pass through the specified space, and are to be insulated over the surface they share with the space for a distance of 450 mm past the duct **(6)**.

12.2.6 Where it is necessary that a ventilation duct passes through a main vertical zone division, an automatic fire damper is to be fitted adjacent to the division. The damper is to also be capable of being manually closed from each side of the division. The control location is to be readily accessible and be clearly and prominently marked. The duct between the division and the damper are to be constructed of steel in accordance with paragraphs 12.2.4.1.1 and 12.2.4.1.2 and insulated to at least the same fire integrity as the division penetrated. The damper is to be fitted on at least one side of the division with a visible indicator showing the operating position of the damper.

12.3 Details of fire dampers and duct penetrations

12.3.1 Ducts passing through "A" class divisions are to meet the following requirements:

12.3.1.1 Where a thin plated duct with a free cross sectional area equal to, or less than, 0.02 m^2 passes through "A" class divisions, the opening is to be fitted with a steel sheet sleeve having a thickness of at least 3 mm and a length of at least 200 mm, divided preferably into 100 mm on each side of a bulkhead or, in the case of a deck, wholly laid on the lower side of the decks penetrated;

12.3.1.2 Where ventilation ducts with a free cross-sectional area exceeding 0.02 m^2, but not more than 0.075 m^2, pass through "A" class divisions, the openings are to be lined with steel sheet sleeves. The ducts and sleeves are to have a thickness of at least 3 mm and a length of at least 900 mm. When passing through bulkheads, this length is to be divided preferably into 450 mm on each side of the bulkhead. These ducts, or sleeves lining such ducts, are to be provided with fire insulation. The insulation is to have at least the same fire integrity as the division through which the duct passes; and

12.3.1.3 Automatic fire dampers are to be fitted in all ducts with a free cross-sectional area exceeding 0.075 m^2 that pass through "A" class divisions. Each damper is to be fitted close to the division penetrated and the duct between the damper and the division penetrated is to be constructed of steel in accordance with paragraphs 12.2.4.2.1 and 12.2.4.2.2. The fire damper is to operate automatically, but is to also be capable of being closed manually from both sides of the division. The damper is to be fitted with a visible indicator which shows the operating position of the damper. Fire dampers are not required, however, where ducts pass through spaces surrounded by "A" class divisions, without serving those spaces, provided those ducts have the same fire integrity as the divisions which they penetrate. A duct of cross-sectional area exceeding 0.075 m^2 are to not be divided into smaller ducts at the penetration of an "A" class division and then recombined into the original duct once through the division to avoid installing the damper required by this provision.

Note: *Ducts or pipes with free sectional area of 0,075m^2 or less need not be fitted with fire damper at their passage through Class "A" divisions provided that the requirements of 12.2.2, 12.2.3, 9.3, 8.3 and 12.7.2 are complied with.*

(6) *Refer to note given under item 12.2.2 and 12.2.3 and Figure 21.1*

12.3.2 Ventilation ducts with a free cross-sectional area exceeding 0.02 m^2 passing through "B" class bulkheads are to be lined with steel sheet sleeves of 900 mm in length, divided preferably into 450 mm on each side of the bulkheads unless the duct is of steel for this length.

12.3.3 All fire dampers are to be capable of manual operation. The dampers are to have a direct mechanical means of release or, alternatively, be closed by electrical, hydraulic, or pneumatic operation. All dampers are to be manually operable from both sides of the division. Automatic fire dampers, including those capable of remote operation, are to have a failsafe mechanism that will close the damper in a fire even upon loss of electrical power or hydraulic or pneumatic pressure loss. Remotely operated fire dampers are to be capable of being reopened manually at the damper.

12.4 Ventilation systems for passenger ships carrying more than 36 passengers

12.4.1 In addition to the requirements in items 12.1, 12.2 and 12.3, the ventilation system of a passenger ship carrying more than 36 passengers are to also meet the following requirements.

12.4.2 In general, the ventilation fans are to be so arranged that the ducts reaching the various spaces remain within a main vertical zone.

12.4.3 Stairway enclosures are to be served by an independent ventilation fan and duct system (exhaust and supply) which are to not serve any other spaces in the ventilation systems.

12.4.4 A duct, irrespective of its cross-section, serving more than one 'tween-deck accommodation space, service space or control station, is to be fitted, near the penetration of each deck of such spaces, with an automatic smoke damper that is to also be capable of being closed manually from the protected deck above the damper. Where a fan serves more than one 'tween-deck space through separate ducts within a main vertical zone, each dedicated to a single 'tween-deck space, each duct is to be provided with a manually operated smoke damper fitted close to the fan.

12.4.5 Vertical ducts are to, if necessary, be insulated as required by tables 21.1 and 21.2. Ducts are to be insulated as required for decks between the space they serve and the space being considered, as applicable.

12.5 Exhaust ducts from galley ranges (7)

12.5.1 Requirements for passenger ships carrying more than 36 passengers

12.5.1.1 In addition to the requirements in items 12.1, 12.2 and 12.3, exhaust ducts from galley ranges are to be constructed in accordance with items 12.2.4.2.1 and 12.2.4.2.2 and insulated to "A-60" class standard throughout accommodation spaces, service spaces, or control stations they pass through. They are to also be fitted with:

12.5.1.1.1 A grease trap readily removable for cleaning unless an alternative approved grease removal system is fitted;

12.5.1.1.2 A fire damper located in the lower end of the duct at the junction between the duct and the galley range hood which is automatically and remotely operated and, in addition, a remotely operated fire damper located in the upper end of the duct close to the outlet of the duct;

12.5.1.1.3 A fixed means for extinguishing a fire within the duct **(8)**;

---

(7) *Fire dampers required by 12.5.1.and 12.5.2 do not need to pass the fire test in Res. A 754(18), but should be of steel and capable of stopping the draught. The requirements to "A" class applies only to the part of the duct outside of the galley. For ships constructed before 1 January 2016 refer to Retrospective* ***TL*** *Technical Circular S-P 03/15.*

(8) *Refer to the recommendations published by the International Organization for Standardization, in particular publication ISO 15371:2009, Ships and marine technology – Fire-extinguishing systems for protection of galley cooking equipment.*

12.5.1.1.4 Remote-control arrangements for shutting off the exhaust fans and supply fans, for operating the fire dampers mentioned in paragraph 12.5.1.1.2 and for operating the fire-extinguishing system, which are to be placed in a position outside the galley close to the entrance to the galley. Where a multi-branch system is installed, a remote means located with the above controls shall be provided to close all branches exhausting through the same main duct before an extinguishing medium is released into the system; and

12.5.1.1.5 Suitably located hatches for inspection and cleaning, including one provided close to the exhaust fan and one fitted in the lower end where grease accumulates.

12.5.1.2 Exhaust ducts from ranges for cooking equipment installed on open decks are to conform to item 12.5.1.1, as applicable, when passing through accommodation spaces or spaces containing combustible materials.

12.5.2 Requirements for passenger ships carrying not more than 36 passengers

When passing through accommodation spaces or spaces containing combustible materials, the exhaust ducts from galley ranges are to be constructed in accordance with paragraphs 12.2.4.1.1 and 12.2.4.1.2.

Note: For determining fire insulation for trunks and ducts which pass through an enclosed space, the term "pass through" pertains to the part of the trunk/duct contiguous to the enclosed space. See Figure 21.1.

Each exhaust duct is to be fitted with:

12.5.2.1 A grease trap readily removable for cleaning;

12.5.2.2 An automatically and remotely operated fire damper located in the lower end of the duct at the junction between the duct and the galley range hood and, in addition, a remotely operated fire damper in the upper end of the duct close to the outlet of the duct;

12.5.2.3 Arrangements, operable from within the galley, for shutting off the exhaust and supply fans; and

12.5.2.4 Fixed means for extinguishing a fire within the duct. **(9)**

12.6 Ventilation rooms serving machinery spaces of category A containing internal combustion machinery

12.6.1 Where a ventilation room serves only such an adjacent machinery space and there is no fire division between the ventilation room and the machinery space, the means for closing the ventilation duct or ducts serving the machinery space are to be located outside of the ventilation room and machinery space.

12.6.2 Where a ventilation room serves such a machinery space as well as other spaces and is separated from the machinery space by a "A-0" class division, including penetrations, the means for closing the ventilation duct or ducts for the machinery space can be located in the ventilation room.

12.7 Additional requirements for ships carrying more than 36 passengers

12.7.1 In general, the ventilation fans are to be so disposed that the ducts reaching the various spaces remain within the main vertical zone.

12.7.2 Where ventilation systems penetrate decks, precautions are to be taken, in addition to those relating to the fire integrity of the deck required by 12.1 and 12.7 to reduce the likelihood of smoke and hot gases passing from one between deck space to another through the system. In addition to insulation requirements contained in this item, vertical ducts, are to, if necessary, be insulated as required by the appropriate Tables 21.1 and 21.2.

12.7.3 Stairway enclosures are to be ventilated and served by an independent fan and duct system which is not to serve any other spaces in the ventilation systems.

12.7.4 Exhaust ducts are to be provided with hatches for inspection and cleaning. The hatches are to be located near the fire dampers.

(9) *Refer to the recommendations published by the International Organization for Standardization, in particular publication ISO 15371:2009, Ships and marine technology – Fire-extinguishing systems for protection of galley cooking equipment.*

12.8 Ventilation systems for laundries in passenger ships carrying more than 36 passengers

Exhaust ducts from laundries and drying rooms of category (13) spaces as defined in paragraph 2.2.3.2.2 are to be fitted with:

12.8.1 Filters readily removable for cleaning purposes;

12.8.2 A fire damper located in the lower end of the duct which is automatically and remotely operated;

12.8.3 Remote-control arrangements for shutting off the exhaust fans and supply fans from within the space and for operating the fire damper mentioned in paragraph 12.8.2; and

12.8.4 Suitably located hatches for inspection and cleaning.

12.9 Ventilation of control stations outside machinery spaces

Practicable measures are to be taken for control stations outside machinery spaces in order to ensure that ventilation, visibility and freedom from smoke are maintained so that, in the event of fire, the machinery and equipment contained therein may be supervised and continue to function effectively. Alternative and separate means of air supply are to be provided and air inlets of the two sources of supply are to be so disposed that the risk of both inlets drawing in smoke simultaneously is minimized. At the discretion of **TL**, such requirements need not apply to control stations situated on, and opening onto, an open deck or where local closing arrangements would be equal effective.
Equally effective local closing arrangements means that in case of ventilators these are to be fitted with fire dampers or smoke dampers which could be closed easily within the control station in order to maintain the absence of smoke in the event of fire.

The ventilation system serving safety centers may be derived from the ventilation system serving the navigation bridge, unless located in an adjacent main vertical zone.

12.10 Ventilation duct passes through a main vertical zone division

Where it is necessary that a ventilation duct passes through a main vertical zone division, a fail-safe automatic closing fire damper is to be fitted adjacent to the division. The damper is also be capable of being manually closed from each side of the division. The operating position is to be readily accessible and be marked in red light-reflecting colour. The duct between the division and the damper are to be of steel or other equivalent material and, if necessary, insulated to comply with the requirements of item 6.1. The damper is to be fitted on at least one side of the division with a visible indicator showing whether the damper is in the open position.

12.11 Control of power ventilation

12.11.1 Power ventilation of accommodation spaces, service spaces, cargo spaces, control stations and machinery spaces is to be capable of being stopped from an easily accessible outside the space being ventilated. This position should not be readily cut off in the event of a fire in the spaces served. The means provided for stopping the power ventilation of the machinery spaces shall be entirely separate from the means provided for stopping ventilation of other spaces.

12.11.2 In passenger ships carrying more than 36 passengers, power ventilation, except machinery space and cargo space ventilation and any alternative system which may be required under item B.12.9 shall be fitted with controls so grouped that all fans may be stopped from either of two separate positions which are to be situated as far apart as practicable. Fans serving power ventilation systems to cargo spaces are to be capable of being stopped from a safe position outside such spaces.

Note: *The fan in a HVAC temperature control unit, or a circulation fan inside a cabinet/switchboard, is not considered to be a ventilation fan as addressed in item B.12.11.1, B.12.11.2 and B.18.3.2.1, if it is not capable of supplying outside air to the space when the power ventilation is shut down*

Therefore, such fans need not be capable of being stopped from an easily accessible position (or a safe position) outside the space being served when applying items B.12.11.1 or B.12.11.2, and need not be capable of being controlled from a continuously manned central control station for passenger ships carrying more than 36 passengers when applying item B.18.3.2.1.

12.12 Closing of ventilation inlets and outlets

The main inlets and outlets of all ventilation systems shall be capable of being closed from outside the spaces being ventilated. The means of closing shall be easily accessible as well as prominently and permanently marked and shall indicate whether the shut-off is open or closed.

Ventilation inlets and outlets located at outside boundaries are to be fitted with closing appliances. Such inlets and outlets need not comply with C.8.2.1

13. Fire Protection Materials

13.1 Use of non-combustible materials

13.1.1 Insulating materials

Insulating materials are to be non-combustible, except in cargo spaces, mail rooms, baggage rooms, and refrigerated compartments of service spaces. Vapour barriers and adhesives used in conjunction with insulation, as well as, the insulation of pipe fittings for cold service system, need not be of non-combustible materials, but they are to be kept to the minimum quantity practicable and their exposed surfaces are to have low flame-spread characteristics.

Cold service is understood to mean refrigeration systems and chilled water piping for air-conditoning systems.

13.1.2 Ceilings and linings

Except in cargo spaces, mail rooms, baggage rooms, saunas or refrigerated compartments of service spaces, all linings, grounds, draft stops and ceilings are to be of non-combustible material.

13.1.3 Partial bulkheads and decks

13.1.3.1 Partial bulkheads or decks used to subdivide a space for utility or artistic treatment are to be of non-combustible materials.

13.1.3.2 Linings, ceilings and partial bulkheads or decks used to screen or to separate adjacent cabin balconies are to be of non-combustible materials.

13.1.4 Application details to be in accordance with FTP Code 2010, Annex-4.

13.2 Use of combustible materials

13.2.1 General

“A” , “B” or “C” class divisions in accommodation and service spaces and cabin balconies which are faced with combustible materials, facings, mouldings, decorations and veneers are to comply with provisions of items 13.2.2 to 13.2.4 and 13.5. However, traditional wooden benches and wooden linings on bulkheads and ceilings are permitted in saunas and such materials need not be subject to the calculations prescribed in items 13.2.2 and 13.2.3. However, the provisions of item 13.2.3 need not be applied to cabin balconies.

A division consisting of a non-combustible core and combustible veneers may be accepted as a B or C class division, provided that the non-combustible core is tested in accordance with the FTP Code 2010, part 1, that the B class division is tested in accordance with the FTP Code 2010, part 3, and that the veneers are tested in accordance with the FTP Code 2010 part 5 and part 2, if applicable.

13.2.2 Maximum calorific value of combustible materials

Combustible materials used on the surfaces and linings specified in item 13.2.1 are to have a calorific value **(10)** not exceeding 45 MJ/m^2 of the area for the thickness used.

(10) *Refer to the recommendations published by the International Organization for Standardization, in particular publication ISO 1716, Reaction to fire tests for products -- Determination of the gross heat of combustion (calorific value).*

The requirements of this item are not applicable to the surfaces of furniture fixed to linings or bulkheads.

13.2.3 Total volume of combustible materials

Where combustible materials are used in accordance with item 13.2.1 , they are to comply with the following requirements:

13.2.3.1 The total volume of combustible facings, mouldings, decorations and veneers in accommodation and service spaces are not to exceed a volume equivalent to 2.5 mm. veneer on the combined area of the walls and ceiling linings. Furniture fixed to linings, bulkheads or decks need not be included in the calculation of the total volume of combustible materials; and

13.2.3.2 In the case of ships fitted with an automatic sprinkler system complying with the provisions of FSS Code, the above volume may include some combustible

material used for erection of “C” class divisions. However,

13.2.4 Low flame spread characteristics of exposed surfaces

The following surfaces are to have low flame spread characteristics in accordance with the FTP Code 2010:

13.2.4.1 Exposed surfaces in corridors and stairway enclosures and of bulkhead and ceiling linings in accommodation and service spaces (except saunas) and control stations; and

13.2.4.2 Surfaces and grounds in concealed or inaccessible spaces in accommodation and service spaces and control stations.

13.2.4.3 Exposed surfaces of cabin balconies, except for natural hardwood decking system.

13.3 Furniture in stairway enclosures

Furniture in stairway enclosures shall be limited to seating. It should be fixed, limited to six seats on each deck in each stairway enclosure, be of restricted fire risk determined in accordance with the FTP Code 2010, and shall not restrict the passenger escape route. **TL** may permit additional seating in the main reception area within a stairway enclosure if it is fixed, non-combustible and does not restrict the passenger escape route.

Furniture shall not be permitted in passenger and crew corridors forming escape routes in cabin areas.

In addition to the above, lockers of non-combustible material, providing storage for safety equipment, may be permitted within these areas.

Drinking water dispensers and ice cube machines may be permitted in corridors provided they are fixed and do not restrict the width of the escape route. This applies as well to decorative flower or plant arrangements, statues or other objects of art such as paintings and tapestries in corridors and stairways.

13.4 Furniture and furnishings on cabin balconies

Furniture and furnishings on cabin balconies are to comply with the following, unless such balconies are protected by a fixed pressure water-spraying and fixed fire detection and fire alarm systems complying with regulations 7.10 and 10.6.1.3 of SOLAS 1974, as amended, Ch. II-2.

13.4.1 Case furniture are to be constructed entirely of approved non-combustible materials, except that a combustible veneer not exceeding 2 mm. may be used on the working surface;

13.4.2 Free-standing furniture are to be constructed with frames of non-combustible materials;

13.4.3 Draperies and other suspended textile materials are to have qualities of resistance to the propagation of flame not inferior to those of wool having a mass of 0,8 kg/m^2 **(11).**

(11) *Refer to FTP Code 2010.*

13.4.4 Upholstered furniture are to have qualities of resistance to the ignition and propagation of flame **(11)** and

13.4.5 Bedding components are to have qualities of resistance to the ignition and propagation of flame **(11).**

13.5 Smoke generation potential and toxicity

13.5.1 Paints, varnishes and other finishes

Paints, varnishes and other finishes used on exposed interior surfaces and on exposed surfaces of cabin balconies are not to be capable of producing excessive quantities of smoke and toxic products, this being determined in accordance with FTP Code 2010.

On passenger ships, paints, varnishes and other finishes used on exposed surfaces of cabin balconies, excluding natural hard wood decking systems, shall not be capable of producing excessive quantities of smoke and toxic products, this being determined in accordance with the FTP Code 2010. Application details to be in accordance with FTP Code 2010, Annex-4.

This regulation only applies to accommodation spaces, service spaces and control stations as well as stairway enclosures.

13.5.2 Primary deck coverings

Primary deck coverings, if applied within accommodation and service spaces and control stations and on cabin balconies are to be of approved material which will not give rise to smoke or toxic or explosive hazards at elevated temperatures, this being determined in accordance with FTP Code 2010.

14. Details of Construction

14.1 In accommodation and service spaces, control stations, corridors and stairways, air spaces enclosed behind ceilings, panelling or linings are to be suitably divided by close-fitting draught stops not more than 14 m. apart.

In the vertical direction, such enclosed air spaces, including those behind linings of stair-ways, trunks, etc. shall be closed at each deck.

14.2 The construction of ceilings and bulkheads is to be such that it will be possible, without impairing the efficiency of the fire protection, for the fire patrols to detect any smoke originating in concealed and inaccessible spaces.

14.3 The cargo holds and machinery spaces must be capable of being effectively sealed such as to prevent the inlet of air. Doors leading to machinery spaces of group A are to be provided with self-closing devices and 2 securing devices. All other machinery spaces, which are protected by a gas fire extinguishing system, are to be equipped with self-closing doors.

15. Helicopter Facilities

15.1 Construction of steel or other equivalent material

In general, the construction of the helidecks are to be of steel or other equivalent materials. If the helideck forms the deckhead of a deckhouse or superstructure, it is to be insulated to “A-60” class standard.

15.2 Construction of aluminum or other low melting point metals

15.2.1 If the platform is cantilevered over the side of the ship, after each fire on the ship or on the platform, the platform shall undergo a structural analysis to determined its suitability for further use; and

15.2.2 If the platform is located above the ship's deckhouse or similar structure, the following conditions shall be satisfied:

15.2.2.1 The deckhouse top and bulkheads under the platform are to have no openings;

15.2.2.2 All windows under the platform are to be provided with steel shutters; and

15.2.2.3 After each fire on the platform or in close proximity, the platform are to undergo a structural analysis to determine its suitability for further use.

16. Construction and Arrangement of Saunas

16.1 The perimeter of the sauna is to be of “A” class boundaries and may include changing rooms, showers and toilets. The sauna is to be insulated to A-60 standard against other spaces except those inside the perimeter and spaces of category [5], [9] and [10].

16.2 Bathrooms with direct access to saunas may be considered as part of them. in such cases, the door between sauna and the bathroom need not comply with fire safety requirements.

16.3 The traditional wooden lining on the bulkheads and ceiling are permitted in the sauna. The ceilings above the oven are to be lined with a non-combustible plate with an air-gap of at least 30 mm. The distance from the hot surfaces to combustible materials are to be at least 500 mm. or the combustible materials are to be suitably protected.

16.4 The traditional wooden benches are permitted to be used in the sauna.

16.5 The sauna door shall open outwards by pushing.

16.6 Electrically heated ovens are to be provided with a timer.

17. Means of Escape

17.1 Means of escape from control stations, accommodation spaces and service spaces

For arrangement of means of escape see FSS Code Chapter 13.

17.1.1 General requirements

17.1.1.1 Stairways and ladders are to be so arranged as to provide ready means of escape to the lifeboat and liferaft embarkation deck from all passenger and crew spaces and from spaces in which the crew is normally employed, other than machinery spaces.

17.1.1.2 Unless expressly provided otherwise in this subsection, a corridor, lobby, or part of a corridor from which there is only one route of escape are to be prohibited.

Dead-end corridors used in service areas which are necessary for the practical utility of the ship, such as fuel oil stations and athwartship supply corridors, are to be permitted, provided such dead-end corridors are separated from crew accommodation areas and are inaccessible from passenger accommodation areas. Also, a part of a corridor that has a depth not exceeding its width is considered a recess or local extension and is permitted.

17.1.1.3 All stairways in accommodation and service spaces and control stations are to be of steel frame construction except where **TL** sanctions the use of other equivalent material.

17.1.1.4 If a radiotelegraph station has no direct access to the open deck, two means of escape from, or access to, the station are to be provided, one of which may be a porthole or window of sufficient size or other means to the satisfaction of **TL**.

17.1.1.5 Doors in escape routes shall, in general, open in-way of the direction of escape, except that;

17.1.1.5.1 Individual cabin doors may open into the cabins in order to avoid injury to persons in the corridor when the door is opened, and

17.1.1.5.2 Door in vertical emergency escape trunks may open out of the trunk in order to permit the trunk to be used both for escape and access.

17.1.1.6 Lifts shall not be considered as forming one of the means of escape as required by this regulation.

17.1.2 Escape from spaces below the bulkhead deck

17.1.2.1 Below the bulkhead deck, two means of escape, at least one of which is independent of watertight doors, are to be provided from each watertight compartment or similarly restricted space or group of spaces. These means of escapes shall be as widely separated as possible and ready.

Exceptionally, **TL** may dispense with one of the means of escape for crew spaces that are entered only occasionally, if the required escape route is independent of watertight doors.

17.1.2.2 Where **TL** has granted dispensation under the provision of item 17.2.1, this sole means of escape are to provide safe escape. However, stairways are not to be less than 800 mm. in clear width with handrails on both sides.

17.1.3 Escape from spaces above the bulkhead deck

Above the bulkhead deck, there are to be at least two means of escape from each main vertical zone or similarly restricted space or group of spaces at least one of which is to give access to a stairway forming a vertical escape.

17.1.4 Direct access to stairway enclosures

Stairway enclosures in accommodation and service spaces are to have direct access from the corridors and be of a sufficient area to prevent congestion, having in view the number of person likely to use them in an emergency. Within the perimeter of such stairway enclosures, only public toilets, locker of non-combustible material providing storage for non-hazardous safety equipment and open information counters are permitted. Only corridors, lifts, public toilets, special category spaces and open ro-ro spaces to which any passengers carried can have access, other escape stairways required by item 17.5.1 and external areas are permitted to have direct access to these stairway enclosures. Public spaces may also have direct access to stairway enclosures except for the backstage of a theatre.

Small corridors or lobbies used to separate an enclosed stairway from galleys or main laundries may have direct access to the stairway provided they have a minimum deck area of 4,5 m^2 , a width of no less than 900 mm. and contain a fire hose station.

17.1.5 Details of means of escape

17.1.5.1 At least one of the means of escape required by items 17.1.2.1 and 17.1.3 is to consist of a readily accessible enclosed stairway, that is to provide continuous fire shelter from the level of its origin to the appropriate lifeboat and liferaft embarkation decks, or to the uppermost weather deck if the embarkation deck does not extend to the main vertical zone being considered. In the latter case, direct access to the embarkation deck by way of external open stairways and passageways are to be provided and are to have emergency lighting and slip-free surfaces under foot. Boundaries facing external open stairways and passageways forming part of an escape route and boundaries in such a position that their failure during a fire would impede escape to the embarkation deck are to have fire integrity, including insulation values, in accordance with the Tables 21.1 to 21.4.

17.1.5.2 Protection of access from the stairway enclosures to the lifeboat and liferaft embarkation areas are to be provided either directly or through protected internal routes which have fire integrity and insulation values for stairway enclosures as determined by Tables 21.1 to 21.4, as appropriate.

17.1.5.3 Stairways serving only a space and a balcony in that space are not to be considered as forming one of the required means of escape.

17.1.5.4 Each level within an atrium is to have two means of escape, one of which is to give direct access to an enclosed vertical means of escape meeting the requirements.

17.1.5.5 The widths, number and continuity of escapes are to be in accordance with the requirements in the FSS Code.

17.1.6 Marking of escape routes

17.1.6.1 In addition to the emergency lighting, the means of escape including stairways and exits, are to be marked by lighting or photoluminescent strip indicators placed not more than 0,3 m. above the deck at all points of the escape route including angles and intersections. The marking must enable passengers to identify all the routes of escape and readily identify the escape exits.

If electric illumination is used, it shall be supplied by the emergency source of power and it is to be so arranged that the failure of any single light or cut in a lighting strip, will not result in the marking being ineffective.

Additionally, all escape route signs and fire equipment location marking are to be of photoluminescent material or marked by lighting. Such lighting or photoluminescent are to be evaluated, tested and applied in accordance with the FSS Code.

17.1.6.2 In passenger ships carrying more than 36 passengers, the requirement of item 17.6.1 are also to apply to the crew accommodation areas.

17.1.6.3 In lieu of the escape route lighting system required by item 17.1.6.1, alternative evacuation guidance systems may be accepted if approved by **TL** based on the guidelines developed by IMO **(12).**

17.1.7 Normally locked doors that form part of an escape route

17.1.7.1 Cabin and stateroom doors are not to require keys to unlock them from inside the room. Neither shall there be any doors along any designated escape route which require keys to unlock them when moving in the direction of escape.

17.1.7.2 Escape doors from public spaces that are normally latched are to be fitted with a means of quick release. Such means are to consist of a door-latching mechanism incorporating a device that releases the latch upon the application of a force in the direction of escape flow. Quick release mechanism is to be designed and installed to the satisfaction of **TL** and in particular:

17.1.7.2.1.1 Consist of bars or panels, the actuating portion of which extends across at least one half of the width of the door leaf , at least 760 mm. and not more than 1120 mm. above the deck;

17.1.7.2.1.2 Cause the latch to release when a force not exceeding 67 N is applied; and

17.1.7.2.1.3 Not to be equipped with any locking device, set screw or other arrangement that preventsthe release of the latch when pressure is applied to the releasing device.

17.1.8 Emergency escape breathing devices

17.1.8.1 Emergency escape breathing devices are to comply with the FSS Code. Spare emergency escape breathing devices are to be kept on board.

17.1.8.2 All passenger ships are to carry at least two emergency escape breathing device within accommodation spaces.

17.1.8.3 In all passenger ships, at least two emergency escape breathing devices are to be carried in each main vertical zone.

17.1.8.4 In all passenger ships carrying more than 36 passengers, two emergency escape breathing device, in addition to those required in item 17.1.8.3 above, are to be carried in each main vertical zone.

17.1.8.5 However, items 17.1.8.3 and 17.1.8.4 do not apply to stairway enclosures which constitute individual main vertical zones and to the main vertical zones in the fore or aft end of a ship which do not contain spaces of categories [6], [7], [8] or [12] as defined in 4.2.

17.2 Means of escape from machinery spaces

17.2.1 General

Means of escape from each machinery space are to comply with the following provisions.

17.2.2 Escape from spaces below the bulkhead deck

Note: For application of items 17.2.2.1 and 17.2.2.2, see UI SC276.

Where the space is below the bulkhead deck, the two means of escape are to consist of either:

(12) *Refer to the functional requirements and performance standards for the assessment of evacuation guidance system (MSC/Circ. 1167) and the interim guidelines for the testing, approval and maintenance of evacuation guidance systems used as an alternative to low-location lighting system (MSC/Circ. 1168).*

17.2.2.1 Two sets of steel ladders as widely separated as possible, leading to doors in the upper part of the space, similarly separated and from which access is provided to the appropriate lifeboat and liferaft embarkation decks. One of these ladders are to be located within a protected enclosure that satisfies item 4.2, category [2], or 4.3, category [4], as appropriate from the lower part of the space it serves to a safe position outside the space. Self-closing doors of the, same fire integrity standards are to be fitted in the enclosure. The ladder are to be fixed in such a way that heat is not transferred into the enclosure through non-insulated fixing points. The protected enclosure are to have minimum internal dimensions of at least 800 mm.x 800 mm, and are to have emergency lighting provisions; or

17.2.2.2 One steel ladder leading to a door in the upper part of the space from which access is provided to the embarkation deck and additionally, in the lower part of the space and in a position well separated from the ladder referred to, a steel door capable of being operated from each side and which provides access to a safe escape route from the lower part of the space to the embarkation deck.

17.2.3 Escape from spaces above the bulkhead deck

Where the space is above the bulkhead deck, two means of escape are to be as widely separated as possible and the doors leading from such means of escape are to be in a position from which access is provided to the appropriate lifeboat and liferaft embarkation decks. Where such escapes require the use of ladders these are to be of steel.

Note: For application of items 17.2.3, see UI SC276.

17.2.4 Dispensation from two means of escape

A ship of a gross tonnage less than 1000 may be dispensed with one of the means of escape, due regard being paid to the width and disposition of the upper part of the space.

In a ship of a gross tonnage of 1000 and above, may be dispensed with one means of escape from any such space, including a normally unattended auxiliary machinery space, so long as either a door or a steel ladder provides a safe escape route to the embarkation deck, due regard being paid to the nature and location of the space and whether persons are normally employed in that space. This requirement applies only to auxiliary machinery spaces where persons are not normally employed.

In the steering gear room, a second means of escape are to be provided when the emergency steering position is located in that space unless there is direct access to the open deck.

17.2.5 Escape from machinery control rooms

Two means of escape are to be provided from a machinery control room within a machinery space, at least one of which is to provide continuous fire shelter to a safe position outside the machinery space.

Note: For application of items 17.2.5, see UI SC276.

17.2.6 Escape from main workshops within machinery spaces

For ships constructed on or after 1 January 2016, two means of escape shall be provided from the main workshop within a machinery space. At least one of these escape routes shall provide a continuous fire shelter to a safe position outside the machinery space.

17.2.7 Inclined ladders and stairways

For ships constructed on or after 1 January 2016, all inclined ladders/stairways fitted to comply with item 17.2.2 with open treads in machinery spaces being part of or providing access to escape routes but not located within a protected enclosure shall be made of steel. Such ladders/stairways shall be fitted with steel shields attached to their undersides, such as to provide escaping personnel protection against heat and flame from beneath.

17.2.8 Emergency escape breathing devices

17.2.8.1 On all ships, within the machinery spaces, emergency escape breathing devices are to be situated

ready for use at easily visible places, which can be reached quickly and easily at any time in the event of fire. The location of emergency escape breathing devices is to take into account the layout of the machinery space and the number of persons normally working in the spaces.

17.2.8.2 The number and location of these devices are to be indicated in the fire control plan.

17.2.8.3 Emergency escape breathing devices are to comply with the FSS Code.

17.3 Escape from helicopter deck

A helideck are to be provided with both a main and an emergency means of escape and access for fire fighting and rescue personnel. These are to be located as far as apart from each other as is practicable and preferably on opposite sides of the helideck.

17.4 Means of escape from special category and open ro-ro spaces to which any passengers carried can have access

17.4.1 In special category and open ro-ro spaces to which any passengers carried can have access, the number and locations of the means of escape both below and above the bulkhead deck are to be to the satisfaction of **TL** and, in general, the safety of access to the embarkation deck are to be at least equivalent to that provided for under items 17.1.2.1, 17.1.3, 17.1.5.1 and 17.1.5.2. Such spaces are to be provided with designated walkways to the means of escape with a breadth of at least 600 mm**.** The parking arrangements for the vehicles are to maintain the walkways clear at all times.

17.4.2 One of the escape routes from the machinery spaces where the crew is normally employed are to avoid direct access to any special category space.

17.5 Means of escape from ro-ro spaces

At least two means of escape are to be provided in ro-ro spaces where the crew are normally employed. The escape routes are to provide a safe escape to the lifeboat and liferaft embarkation decks and are to be located at the fore and aft ends of the space.

17.6 Additional requirements for ro-ro passenger ships

17.6.1 General

17.6.1.1 Escape routes are to be provided from every normally occupied space on the ship to an assembly station. These escape routes are to be arranged so as to provide the most direct route possible to the assembly station **(13),** and are to be marked with symbols based on the guidelines developed by IMO **(14).**

17.6.1.2 The escape route from cabins to stairway enclosures is to be as direct as possible, with a minimum number of changes in direction. It is not to be necessary to cross from one side of the ship to the other to reach an escape route. It is not to be necessary to climb more than two decks up or down in order to reach an assembly station or open deck from any passenger space.

17.6.1.3 External routes are to be provided from open decks, as referred to in item 17.6.1.2, to the survival craft embarkation stations.

17.6.1.4 Where enclosed spaces adjoin an open deck, openings from the enclosed space to the open deck are, where practicable, to be capable of being used as an emergency exit.

17.6.1.5 Escape routes are not to be obstructed by furniture and other obstructions. With the exception of tables and chairs which may be cleared to provide open space, cabinets and other heavy furnishings in public spaces and along escape routes are to be secured in place to prevent shifting if the ship rolls or lists. Floor coverings are also to be secured in place. When the ship is under way, escape routes are to be kept clear of obstructions such as cleaning carts, bedding, luggage and boxes of goods.

---

(13) *Refer to indication of the assembly stations in passenger ships (MSC/Circ.777).*

(14) *Refer to symbols related to life-saving appliances and arrangements adopted by IMO by resolution A.760 (18) as amended by Resolution MSC.82(70).*

17.6.2 Instruction for safe escape

17.6.2.1 Decks are to be sequentially numbered, starting with “1” at the tank top or lowest deck. The numbers are to be prominently displayed at stair landings and lift lobbies. Decks may also be named, but the deck number are always to be displayed with the name.

17.6.2.2 Simple “mimic” plans showing the “you are here” position and escape routes marked by arrows are to be prominently displayed on the inside of each cabin door and in public spaces. The plan are to show the directions of escape and are to be properly oriented in relation to its position on the ship.

17.6.3 Strength of handrails and corridors

17.6.3.1 Handrails or other handholds are to be provided in all corridors along the entire escape route, so that a firm handhold is available at every step of the way, where possible, to the assembly stations and embarkation stations. Such handrails are to be provided on both sides of longitudinal corridors more than 1,8 m. in width and transverse corridors more than 1 m. in width.

Particular attention are to be paid to the need to be able to cross lobbies, atriums and other large open spaces along escape routes.

Handrails and other handholds are to be of such strength as to withstand a distributed horizontal load of 750 N/m applied in the direction of the centre of the corridor or space, and a distributed vertical load of 750 N/m applied in the downward direction. The two loads need not be applied simultaneously.

17.6.3.2 The lowest 0.5 m. of bulkheads and other partitions forming vertical divisions along escape routes are to be able to sustain a load of 750 N/m to allow them to be used as walking surfaces form the side of the escape route with the ship at large angles of heel.

17.6.4 Evacuation analysis (15)

Escape routes are to be evaluated by an evacuation analysis early in the design process.

The analysis are to be used to identify and eliminate, as far as practicable, congestion which may develop during an abandonment, due to normal movement of passengers and crew along escape routes, including the possibility that crew may need to move along these routes in a direction opposite the movement of passengers. In addition, the analysis are to be used to demonstrate the escape arrangements are sufficiently flexible to provide for the possibility that certain escape routes, assembly stations, embarkation stations or survival craft may not be available as a result of a casualty.

18. Fire Detection and Fire Alarm

18.1 General requirements

18.1.1 A fixed fire detection and fire alarm system are to be provided in accordance with the provisions of this subsection.

18.1.2 A fixed fire detection and fire alarm system and a sample extraction smoke detection system required by this subsection are to be approved type and comply with the FSS Code.

18.1.3 Where a fixed fire detection and fire alarm system is required for the protection of spaces other than those specified in item 18.3.1, at least one detector complying with the FSS Code are to be installed in each such space.

18.1.4 A fixed fire detection and fire alarm system are to be capable of remotely and individually identifying each detector and manually operated call point.

(15) *Reference is made to the Interim Guidelines for evacuation analyses for new and existing passenger ships, adopted by IMO by MSC/Circ.1238.*

18.2 Protection of machinery spaces

18.2.1 Installation

A fixed fire detection and fire alarm system are to be installed in:

18.2.1.1 Periodically unattended machinery spaces; and

18.2.1.2 Machinery spaces where;

- The installation of automatic and remote control systems and equipment has been approved in lieu of continuous manning of the space; and

- The main propulsion and associated machinery, including the main sources of electric power, are provided with various degrees of automatic or remote control and are under continuous manned supervision from a control room.

18.2.2 Design

The fixed fire detection and fire alarm system required in paragraph 18.2.1.1 shall be so designed and the detectors so positioned as to detect rapidly the onset of fire in any part of those spaces and under any normal conditions of operation of the machinery and variations of ventilation as required by the possible range of ambient temperatures. Except in spaces of restricted height and where their use is specially appropriate, detection systems using only thermal detectors shall not be permitted. The detection system shall initiate audible and visual alarms distinct in both respects from the alarms of any other system not indicating fire, in sufficient places to ensure that the alarms are heard and observed on the navigating bridge and by a responsible engineer officer. When the navigating bridge is unmanned the alarm shall sound in a place where a responsible member of the crew is on duty.

18.3 Protection of accommodation and service spaces and control stations

18.3.1 Smoke detectors in accommodation spaces

Smoke detectors are to be installed in all stairways, corridors and escape routes within accommodation spaces as provided in items 18.3.2, 18.3.3 and 18.3.4. Consideration shall be given to the installation of special purpose smoke detectors within ventilation ducting.

18.3.2 Requirements for passenger ships carrying more than 36 passengers

18.3.2.1 Passenger ships carrying more than 36 passengers shall have the fire detection alarms for the systems required by item 18.3.2.2 centralized in a continuosly manned central control station. In addition, controls for remote closing of the fire doors and shutting down the ventilation fans shall be centralized in the same location. The ventilation fans shall be capable of reactivation by the crew at the continuously manned control station. The control panels in the central control station shall be capable of indicating open or closed positions of fire doors and closed or off status the detectors, alarms and fans. The control panel shall be continuously powered and shall have an automatic change-over to standby power supply in case of loss of normal power supply. The control panel shall be powered from the main source of electrical power and the emergency source of electrical power defined by Part B, Chapter 5, Electrical Installations Rules, Section 3, C unless other arrangements are permitted by the rules, as applicable. (See also the note under item **B.12.11.2**)

18.3.2.2 A fixed fire detection and fire alarm system are to be so installed and arranged as to provide smoke detection in service spaces, control stations and accommodation spaces, including corridors, stairways and escape routes within accommodation spaces. Smoke detectors need not be fitted in private bathrooms and galleys. Spaces having little or no fire risk such as voids, public toilets, carbon dioxide rooms and similar spaces need not be fitted with a fixed fire detection and alarm system. Detectors fitted in cabins, when activated, are also to be capable of emitting, or cause to be emitted, an audible alarm within the space where they are located.

18.3.3 Requirements for passenger ships carrying not more than 36 passengers

There are to be installed throughout each separate zone, whether vertical or horizontal, in all accommodation and service spaces and, where it is considered necessary by **TL**, in control stations, except spaces which afford no substantial fire risk such as void spaces, sanitary spaces, etc. , either:

18.3.3.1 A fixed fire detection and fire alarm system so installed and arranged as to detect the presence of fire in such spaces and providing smoke detection in corridors, stairways and escape routes within accommodation spaces. Detectors fitted in cabins, when activated, are also to be capable of emitting, or cause to be emitted, an audible alarm within the space where they are located; or

18.3.3.2 An automatic sprinkler, fire detection and fire alarm system of an approved type complying with the relevant requirements of the FSS Code and so installed and arranged as to protect such spaces and, in addition, a fixed fire detection and fire alarm system and so installed and arranged as to provide smoke detection in corridors, stairways and escape routes within accommodation spaces.

18.3.4 Protection of atriums

The entire main vertical zone containing the atrium are to be protected throughout with the smoke detection system.

18.4 Protection of cargo spaces

A fixed fire detection and fire alarm system or a sample extraction smoke detection system are to be provided in any cargo space which, in the opinion of **TL**, is not acces-sible, except where it is shown to the satisfaction of **TL** that the ship is engaged on voyages of such short duration that it would be unreasonable to apply this requirement.

19. Protection of Vehicle,Special Category and Ro-Ro Spaces

19.1 Basic principles

19.1.1 The basic principle underlying the provisions of this subsection is that the main vertical zoning required by item 2. may not be practicable in vehicle spaces and, therefore equivalent protection must be obtained in such spaces on the basis of a horizontal zone concept and by the provision of an efficient fixed fire-extinguishing system. A horizontal zone may include special category spaces on more than one deck provided that the total overall clear height, which is the sum of the distances between deck and web frames of the decks forming one horizontal zone, for vehicles does not exceed 10 m.

19.1.2 The basic principle underlying the provisions of item 19.1.1 is also applicable to ro-ro spaces.

19.2 Structural protection

In passenger ships carrying more than 36 passengers, the boundary bulkheads and decks of special category spaces and ro-ro spaces are to be insulated to "A-60" class standard. However, where a category [5], [9] or [10] space, as defined in item 4.2, is on one side of the division, the standard may be reduced to "A-0". Where fuel oil tanks are below a special category space or a ro-ro space, the integrity of the deck between such spaces may be reduced to A-0 standard.

19.3 Fixed fire-extinguishing systems

19.3.1 Vehicle spaces and ro-ro spaces which are not special category spaces and are capable of being sealed from a location outside of the cargo spaces are to be fitted with a fixed gas fire-extinguishing system which are to comply with the provisions of the FSS Code.

19.3.2 Ro-ro and vehicle spaces not capable of being sealed and special category spaces are to be fitted with a fixed pressure water spraying system for manual operation of an approved type which are to protect all parts of any deck and vehicle platform in such spaces.

19.4 Ventilation system

19.4.1 Capacity of ventilation systems

It is to be provided an effective power ventilation system sufficient to give at least the following air changes:

- Special category spaces	10 air changes per hour
- Closed ro-ro and vehicle spaces other than special category spaces for ships carrying more than 36 passengers	10 air changes per hour
- Closed ro-ro and vehicle spaces other than special category spaces for ships carrying not more than 36 passengers	6 air changes per hour

19.4.2 Performance of ventilation systems

19.4.2.1 The power ventilation system shall be separate from other ventilation systems. The power ventilation system shall be operated to give at least the number of air changes required in item 19.4.1 at all times when vehicles are in such spaces, except where an air quality control system in accordance with item 19.4.2.3 is provided. Ventilation ducts serving such cargo spaces capable of being effectively sealed shall be separated for each such space. The system shall be capable of being controlled from a position outside such spaces.

19.4.2.2 The ventilation system is to be such as to prevent air stratification and the formation of air pockets.

19.4.2.3 Where an air quality control system is provided based on the guidelines **(16)**, the ventilation system may be operated at a decreased number of air changes and/or a decreased amount of ventilation. This relaxation does not apply to spaces to which at least ten air changes per hour is required by Chapter 5 Electrical Installation Section 16 B.1.1 and spaces subject to item 21.1 and Chapter 4 Machinery Section 18 B.12.

19.4.3 Indication of ventilation systems

Means are to be provided on the navigation bridge to indicate any lost of the required ventilating capacity.

19.4.4 Closing appliances and ducts

The arrangements below are to be provided to permit a rapid shutdown and effective closure of the ventilation system from outside of the space in case of fire, taking into account the weather and sea conditions:

- The routes are clearly marked and at least 600 mm clear width;
- They are provided with a single handrail or wire rope lifeline not less than 10 mm in diameter, supported by stanchions not more than 10 m apart in way of any route which involves traversing a deck exposed to weather; and
- They are fitted with appropriate means of access (such as ladders or steps) to the closing devices of ventilators located in high positions (i.e. 1.8 m and above).

Alternatively, remote closing and position indicator arrangements from the bridge or a fire control station for those ventilator closures is acceptable.

Ventilation ducts, including dampers, within a common horizontal zone are to be made of steel. Ventilation ducts that pass through other horizontal zones or machinery spaces are to be “A-60” class steel ducts constructed in accordance with items 12.4.1 and 12.4.2.

19.4.5 Permanent openings

Permanent openings in side plating, the ends or deckhead of the space are to be so situated that a fire in the cargo space does not endanger stowage areas and embarkation stations for survival craft and accommodation spaces, service spaces and control stations in superstructures and deckhouses above the cargo spaces.

19.5 Detection and alarm

It is to be provided a fixed fire detection and fire alarm system complying with the requirements of the FSS Code.

(16) *Refer to the Revised design guidelines and operational recommendations for ventilation systems in ro-ro cargo spaces (MSC/Circ.1515).*

Except open ro-ro spaces, open vehicle spaces and special category spaces, a sample extraction smoke detection system complying with the requirements of the FSS Code may be used as an alternative for the fixed fire detection and fire alarm system required above.

An efficient fire patrol system are to be maintained in special category spaces. If an efficient fire patrol system is maintained by a continuous fire watch at all times during the voyage, a fixed fire detection and fire alarm system is not required.

20. Protection of Openings in Machinery Space Boundaries

20.1 The number of skylights, doors, ventilators, openings in funnels to permit exhaust ventilation and other openings to machinery spaces are to be reduced to a minimum consistent with the needs of ventilation and the proper and safe working of the ship.

20.2 Skylights are to be of steel and not to contain glass panels.

20.3 Means of control are to be provided for closing power operated doors or actuating release mechanism on doors other than power operated watertight doors. The controls are to be located outside the space concerned, where they will not be cut off in the event of fire in the space it serves.

20.4 The means of control required in item 20.3 are to be situated at one control position or grouped in as few positions as possible. Such positions are to have safe access from the open deck.

20.5 Doors other than power-operated watertight doors are to be so arranged that positive closure is assured in case of fire in the space, by power-operated closing arrangements or by the provision of self-closing doors capable of closing against an inclination of 3,5° opposing closure and having a fail-safe hold-back facility, provided with a remotely operated release device. Doors for emergency escape trunks need not be fitted with a fail-safe hold-back facility and a remotely operated release device.

20.6 Windows are not to be fitted in machinery space boundaries. This does not preclude the use of glass in control rooms within the machinery spaces.

21. Special Requirements for Ships Carrying Dangerous Goods

21.1 Ventilation

Adequate power ventilation are to be provided in enclosed cargo spaces. The arrangement are to be such as to provide for at least six air changes per hour

in the cargo space based on an empty cargo space and for removal of vapours from the upper or lower parts of the cargo space, as appropriate. The fans are to be such as to avoid the possibility of ignition of flammable gas/air mixtures. Suitable wire mesh guards are to be fitted over inlet and outlet ventilation openings.

21.2 Insulation of machinery space boundaries

Bulkheads forming boundaries between cargo spaces and machinery spaces of category A are to be insulated to "A-60" standard, unless the dangerous goods are stowed at least 3 m horizontally away from such bulkheads.

Other boundaries between such spaces shall be insulated to "A-60" standard.

In the case that a closed or semi-closed cargo space is located partly above a machinery space and the deck above the machinery space is not insulated, dangerous goods are prohibited in the whole of that cargo space. If the uninsulated deck above the machinery space is a weather deck, dangerous goods are prohibited only for the portion of the deck located above the machinery space.

C. Rules on Fire Protection for Cargo Ships of 500 GT and over

1. Materials of construction

1.1 The hull, decks, structural bulkheads, superstructures and deckhouses are to be constructed of steel or other equivalent material.

Steel or other equivalent material means any non-combustible material which, by itself or due to insulation provided, has structural and integrity properties equivalent to steel at the end of the applicable exposure

to the standard fire test (e.g. aluminium alloy with appropriate insulation).

For the purpose of applying the definition of steel or other equivalent material the "applicable fire exposure" shall be according to the integrity and insulation standards given in tables 21.1 to 21.4. For example, where divisions such as decks or sides and ends of deckhouses are permitted to have "B-0" fire integrity, the "applicable fire exposure" shall be half an hour.

1.2 If aluminum alloys are to be used for certain structural parts of a ship, the insulation of aluminum alloy components of “A” or “B” class division, except structure which is non-load-bearing, are to be such that the temperature of the structural core does not rise more than 200 º C above the ambient temperature at any time during the applicable fire exposure to the standard fire test.

Special attention are to be given to the insulation of aluminum alloy components of columns, stanchions and other structural members required to support lifeboat and liferaft stowage, launching and embarkation areas, and "A" and "B" class divisions to ensure:

1.2.1 That for such members supporting lifeboat and liferaft areas and "A" class divisions, the temperature rise limitation specified in 1.2 is to apply at the end of one hour; and

1.2.2 That for such members required to support "B" class divisions, the temperature rise limitation specified in 1.2 is to apply at the end of half an hour.

1.3 Crowns and casings of machinery spaces of category A are to be of steel construction, adequately insulated (as required by Table 21.5 and 21.7) and any openings therein, if any, are to be suitably arranged and protected to prevent the spread of fire.

1.4 The floor plating of normal passageways in machinery spaces of category A shall be made of steel.

1.5 Materials readily rendered ineffective by heat shall not be used for overboard scuppers, sanitary discharges, and other outlets which are close to the waterline and where the failure of the material in the event of fire would give rise to danger of flooding.

2. Methods of Protection in Accommodation Area

2.1 One of the following methods of protection are to be adopted in accommodation and service spaces and control stations:

2.1.1 Method IC The construction of all internal divisional bulkheads of non-combustible "B" or "C" class divisions generally without the installation of an automatic sprinkler, fire detection and fire alarm system in the accommodation and service spaces, except as required by 7.5.1; or

2.1.2 Method IIC The fitting of an automatic sprinkler, fire detection and fire alarm system, as required by item 7.5.2 for the detection and extinction of fire in all spaces in which fire might be expected to originate, generally with no restriction on the type of internal divisional bulkheads; or

2.1.3 Method IIIC The fitting of a fixed fire detection and fire alarm system, as required by item 7.5.3, in all spaces in which a fire might be expected to originate, generally with no restriction on the type of internal divisional bulkheads, except that in no case must the area of any accommodation space or spaces bounded by an "A" or "B" class division exceed 50 m^2. Consideration may be given to increasing this area for public spaces.

2.2 The requirements for the use of non-combustible materials in construction and insulation of the boundary bulkheads of machinery spaces, control stations, service spaces, etc., and the protection of stairway enclosures and corridors will be common to all three methods.

3. Bulkheads Within the Accommodation Area

3.1 Bulkheads required to be "B" class divisions are to extend from deck to deck and to the shell or other boundaries. However, where a continuous “B” class ceiling or lining is fitted on both sides of the bulkhead, the bulkhead may terminate at the continuous ceiling or lining.

3.2 Method IC - Bulkheads not required by this or other requirements of this Section to be "A" or "B" class divisions, are to be of at least "C" class construction.

3.3 Method IIC - There are to be no restriction on the construction of bulkheads not required by this or other requirements of this Section to be "A" or "B" class divisions except in individual cases where "C" class bulkheads are required in accordance with Table 21.5.

3.4 Method IIIC - There are to be no restriction on the construction of bulkheads not required by this Section to be "A" or "B" class divisions except that the area of any accommodation space or spaces bounded by a continuous "A" or "B" class division must in no case exceed 50 m^2 except in individual cases where "C" class bulkheads are required in accordance with Table 21.5. However, consideration may be given by **TL** to increasing this area for public spaces.

4. Fire Integrity of Bulkheads and Decks

4.1 General

4.1.1 In addition to complying with the specific provisions for fire integrity of bulkheads and decks mentioned elsewhere in this Section, the minimum fire integrity of bulkheads and decks are to be as prescribed in Tables 21.5 and 21.6.

4.1.2 Tables 21.5 and 21.6, are to apply respectively to the bulkheads and decks separating adjacent spaces.

4.1.3 For determining the appropriate fire integrity standards to be applied to divisions between adjacent spaces, such spaces are classified according to their fire risk as shown in categories [1] to [11] below.

Where the contents and use of a space are such that there is a doubt as to its classification for the purpose of this regulation, or where it is possible to assign two or more classifications to a space, it is to be treated as a space within the relevant category having the most stringent boundary requirements. Smaller, enclosed rooms within a space that have less than 30 % communicating openings to that space are to be considered separate spaces. The fire integrity of the boundary bulkheads of such smaller rooms are to be as prescribed in Tables 21.5 and 21.6.

The title of each category is intended to be typical rather than restrictive.

The number in parentheses preceding each category refers to the applicable column or row number in the tables:

[1] Control stations

- Spaces containing emergency sources of power (including battery rooms) and lighting.
- Wheelhouse, chartroom, navigation equipment room (radar transmitter).
- Spaces containing the ship's radio equipment.
- Fire-control stations.
- Control room for propulsion machinery when located outside the machinery space.
- Spaces containing centralized fire alarm equipment.

[2] Corridors

- Corridors and lobbies.

[3] Accommodation spaces

- Spaces used for public spaces, lavatories, cabins, offices, hospitals, cinemas, games and hobby rooms, barber ships, pantries containing no cooking appliances and similar spaces.

[4] Stairways

- Interior stairways, lifts, totally enclosed emergency escape trunks and escalators (other than those wholly contained within the machinery spaces) and enclosures thereto.
- In this connection, a stairway which is enclosed only at one level shall be regarded as part of the space from which it is not separated by a fire door.

[5] Service spaces (low risk)

- Lockers and store-rooms [*] not having provisions for the storage of flammable liquids and having areas less than 4 m^2 and drying rooms and laundries.

- Refrigerated provision chambers, if thermally insulated with non-combustible materials.

[*] Provision chambers are to be treated as store rooms

Distribution boards may be located behind panels/linings within accommodation spaces including stairway enclosures, without the need to categorize the space, provided no provision is made for storage. Identifiable spaces having a deck area of less than 4 m^2 in which distribution boards are located are to be evaluated in this category.

[6] Machinery spaces of category A

- Spaces and trunks to such spaces which contain:

- Internal combustion machinery used for main propulsion; or

- Internal combustion machinery used for purposes other than main propulsion where such machinery has in the aggregate a total power output of not less than 375 kW; or

- Any oil-fired boiler or oil fuel unit or any oil-fired equipment other than boilers, such as inert gas generators, incinerators, etc.

[7] Other machinery spaces

- Spaces, other than machinery spaces of category A, containing propulsion machinery, boilers, oil fuel units, steam and internal combustion engines, generators and major electrical machinery, oil filling stations, refrigerating, stabilizing, ventilation and air conditioning machinery, and similar spaces, and trunks to such spaces.

- Electrical equipment rooms (auto-telephone exchange, air-conditioning duct spaces)

[8] Cargo spaces

All spaces used for cargo (including cargo oil tanks) and trunkways and hatchways to such spaces.

[9] Service spaces (high risk)

- Galleys, pantries containing cooking appliances, saunas, paint and lamp rooms, lockers and store-rooms [*] having areas of 4 m^2 or more, spaces for the storage of flammable liquids, and workshops other than those forming part of the machinery spaces.

- Refrigerated provision, if thermally insulated with combustible materials.

[*] Provision chambers are to be treated as store rooms

[10] Open decks

- Open deck spaces and enclosed promenades having no fire risk. Enclosed promenades are to have no significant fire risk, meaning that furnishing should be restricted to deck furniture. In addition, such spaces are to be naturally ventilated by permanent openings.

- Air spaces (the space outside superstructures and deckhouses).

Note:
See Chapter 4 Machinery Section 16 V.6 for storage of gas bottles on the open deck that are used for domestic purposes.

[11] Ro/Ro cargo vehicle spaces

4.1.4 Continuous "B" class ceilings or linings, in association with the relevant decks or bulkheads, may be accepted as contributing, wholly or in part, to the required insulation and integrity of a division.

4.1.5 External boundaries which are required in item 1.1 to be of steel or other equivalent material may be pierced for the fitting of windows and side-scuttles provided that there is no requirement for such boundaries to have "A" class integrity elsewhere in these requirements. Similarly, in such boundaries which are not required to have "A" class integrity, doors may be constructed of materials which are to the satisfaction of **TL**.

4.1.6 Saunas are to comply with item B, 16.

5. Protection of Stairways and Lift Trunks in Accommodation Spaces, Service Spaces and Control Stations

5.1 Stairways which penetrate only a single deck are to be protected at least at one level by at least "B-0" class divisions and self-closing doors. Lifts which penetrate only a single deck are to be surrounded by "A-0" class divisions with steel doors at both levels.

Stairways and lift trunks which penetrate more than a single deck are to be surrounded by at least "A-0" class divisions and be protected by self-closing doors at all levels.

Dumb-waiters are to be regarded as lifts.

5.2 On ships having accommodation for 12 persons or less, where stairways penetrate more than a single deck and where there are at least two escape routes direct to the open deck at every accommodation level, consideration may be given reducing the "A-0" requirements of item 5.1 to "B-0".

6. Penetrations in Fire-resisting Divisions and Prevention of Heat Transmission

6.1 Penetrations in “A” class divisions

Where “A” class divisions are penetrated, such

penetrations are to be tested in accordance with IMO’s Fire Test Procedure Code (FTP Code 2010). In the case of ventilation ducts, item 10.3 apply. However, where a pipe penetration is made of steel or equivalent material having a thickness of 3 mm. or greater and a length of not less than 900 mm. (preferably 450 mm. on each side of the division), and there are no openings, testing is not required. Such penetrations are to be suitably insulated by extension of the insulation at the same level of the division.

6.2 Penetration in “B” class divisions

Where “B” class divisions are penetrated for the passage of electric cables, pipes, trunks, ducts, etc. or for fitting of ventilation terminals, lighting fixtures and similar devices, arrangements are to be made to ensure that the fire resistance is not impaired, subject to the provisions of item B.12.3.1.2. Pipes other than steel or copper that penetrate “B” class divisions are to be protected by either:

6.2.1 A fire-tested penetration device suitable for the fire resistance of the division pierced and the type of pipe used; or

6.2.2 A steel sleeve**,** having a thickness of not less than 1.8 mm. and a length of not less than 900 mm. for pipe diameters of 150 mm or more and not less than 600 mm for pipe diameters of less than 150 mm (preferably equally divided to each side of the division). The pipe are to be connected to the ends of the sleeve by flanges or couplings; or the clearance between the sleeve and the pipe are not to exceed 2.5 mm; or any clearance between pipe and sleeve are to be made tight by means of non-combustible or other suitable material.

6.3 Pipe penetrating “A” or “B” class divisions

Uninsulated metallic pipes penetrating “A” or “B” class divisions are to be of materials having a melting temperature which exceeds 950 ºC for “A-0” and 850 ºC for “B-0” class divisions.

6.4 Prevention of heat transmission

In approving structural fire protection details, **TL** is to have regard to the risk of heat transmission at intersections and terminal points of required thermal barriers. The insulation of a deck or bulkhead are to be carried past the penetration, intersection or terminal point for a distance of at least 450 mm. in the case of steel and aluminum structures. If a space is divided with a deck or a bulkhead of “A” class standard having insulation of different values, the insulation with the higher value shall continue on the deck or bulkhead with the insulation of the lesser value for a distance of at least 450 mm.

Table 21.5 Fire integrity of bulkheads separating adjacent spaces

Spaces		[1]	[2]	[3]	[4]	[5]	[6]	[7]	[8]	[9]	[10]	[11]
Control stations	[1]	**(5)** A-0	A-0	A-60	A-0	A-15	A-60	A-15	A-60	A-60	**(10)**	A-60
Corridors	[2]		C	B-0	B-0 **(3)** A-0	B-0	A-60	A-0	A-0	A-0	**(10)**	A-30
Accommodation spaces	[3]			**(1)** **(2)** C	B-0 **(3)** A-0	B-0	A-60	A-0	A-0	A-0	**(10)**	A-30
Stairways	[4]				B-0 **(3)** A-0	B-0 **(3)** A-0	A-60	A-0	A-0	A-0	**(10)** **(10)**	A-30
Service spaces (Low risk)	[5]					C	A-60	A-0	A-0	A-0	**(10)**	A-0
Machinery spaces of category A	[6]						**(10)**	A-0	**(7)** A-0	A-60	**(10)**	**(6)** A-60
Other machinery spaces	[7]							**(4)** A-0	A-0	A-0	**(10)**	A-0
Cargo spaces	[8]								**(10)**	A-0	**(10)**	A-0
Service spaces (High risk)	[9]									**(4)** A-0	**(10)**	A-30
Open decks	[10]										-	A-0
Ro/ro cargo spaces	[11]											A-30 **(11)**

Notes to be applied to Tables 21.5 and 21.6, as appropriate

(1) *No special requirements are imposed upon bulkheads in methods IIC and IIIC fire protection.*

(2) *In case of method IIIC "B" class bulkheads of "B-0" rating shall be provided between spaces or groups of spaces of 50 m^2 and over in area.*

(3) *For clarification as to which applies, see item 3. and 5.*

(4) *Where spaces are of the same numerical category and **(4)** appears, a bulkhead or deck of the rating shown in the Tables in only required when the adjacent spaces are for a different purpose, e.g. in category [9]. A galley next to a galley does not require a bulkhead but a galley next to a paint room requires an "A-0" bulkhead.*

(5) *Bulkheads separating the wheelhouse, chartroom and radio room from each other may be "B-0" rating.*

(6) *A-0 rating may be used if no dangerous goods are intended to be carried or if such goods are stowed not less than 3 m horizontally from such bulkhead.*

(7) *For cargo spaces in which dangerous goods are intended to be carried, item 15.2 applies.*

(8) *Deleted.*

(9) *Fire insulation need not be fitted if the machinery space in category [7], has little or no fire risk.*

(10) *Where a **(10)** appears in the Tables, the division is required to be of steel or other equivalent material but is not required to be of "A" class standard.However, where a deck, except an open deck, is penetrated for the passage of electric cables, pipes and vent ducts, such penetrations should be made tight to prevent the passage of flame and smoke. Divisions between control stations (emergency generators) and open decks may have air intake openings without means for closure, unless a fixed gas fire-fighting system is fitted.*

(11) *Ships constructed before 1 July 2014 shall comply, as a minimum, with the previous requirements applicable at the time the ship was constructed, as specified in SOLAS Chapter II-2, Regulation 1.2.*

Table 21.6 Fire integrity of decks separating adjacent spaces

Spaces above → **Space below ↓**		**[1]**	**[2]**	**[3]**	**[4]**	**[5]**	**[6]**	**[7]**	**[8]**	**[9]**	**[10]**	**[11]**
Control stations	[1]	A-0	A-0	A-0	A-0	A-0	A-60	A-0	A-0	A-0	**(10)**	A-60
Corridors	[2]	A-0	**(10)**	**(10)**	A-0	**(10)**	A-60	A-0	A-0	A-0	**(10)**	A-30
Accommodation spaces	[3]	A-60	A-0	**(10)**	A-0	**(10)**	A-60	A-0	A-0	A-0	**(10)**	A-30
Stairways	[4]	A-0	A-0	A-0	**(10)**	A-0	A-60	A-0	A-0	A-0	**(10)**	A-30
Service spaces (Low risk)	[5]	A-15	A-0	A-0	A-0	**(10)**	A-60	A-0	A-0	A-0	**(10)**	A-0
Machinery spaces of category A	[6]	A-60	A-60	A-60	A-60	A-60	**(10)**	**(9)** A-60	A-30	A-60	**(10)**	A-60
Other machinery spaces	[7]	A-15	A-0	A-0	A-0	A-0	A-0	**(10)**	A-0	A-0	**(10)**	A-0
Cargo spaces	[8]	A-60	A-0	A-0	A-0	A-0	A-0	A-0	**(10)**	A-0	**(10)**	A-0
Service spaces (High risk)	[9]	A-60	A-0	A-0	A-0	A-0	A-60	A-0	A-0	**(4)** A-0	**(10)**	A-30
Open decks	[10]	**(10)**	**(10)**	**(10)**	**(10)**	**(10)**	**(10)**	**(10)**	**(10)**	**(10)**	-	A-0 **(11)**
Ro/ro cargo spaces	[11]	A-60	A-30	A-30	A-30	A-0	A-60	A-0	A-0	A-30	A-0 **(11)**	A-30 **(11)**
See notes under Table 21.5.												

7. Doors in Fire Resisting Divisions

7.1 The fire resistance of doors are to be equivalent to that of the division in which they are fitted, this being determined in accordance with FTP Code 2010. Doors and door frames in "A" class divisions are to be constructed of steel. Doors in "B" class divisions are to be non-combustible. Doors fitted in boundary bulkheads of machinery spaces of category A are to be reasonably gastight and self-closing.

In ships constructed according to method IC the use of combustible materials in doors separating cabins from individual interior sanitary accommodation such as showers may be permitted.

7.2 Doors required to be self-closing are not to be fitted with hold-back hooks. However, hold-back arrangements fitted with remote release devices of the fail-safe type may be utilized.

7.3 In corridor bulkheads ventilation openings may be permitted only in and under class B-doors of cabins and public spaces. Ventilation openings are also permitted in B-doors leading to lavatories, offices, pantries, lockers and store rooms. Except as permitted below, the openings are to be provided only in the lower half of a door. Where such opening is in or under a door the total net area of any such opening or openings shall not exceed 0.05 m². Alternatively, a non-combustible air balance duct routed between the cabin and the corridor, and located below the sanitary unit is permitted where the cross-sectional area of the duct does not exceed 0.05 m². Ventilation openings, except those under the door, shall be fitted with a grill made of non-combustible material.

7.4 Watertight doors need not be insulated.

7.5 Protection of accommodation and service spaces and control stations

Accommodation and service spaces and control stations of cargo ships shall be protected by fixed fire detection and fire alarm system and/or an automatic sprinkler, fire detection and fire alarm system as follows

depending on a protection method adopted in accordance with Item C.2.

7.5.1 Method IC - A fixed fire detection and fire alarm system shall be so installed and arranged as to provide smoke detection in all corridors, stairways and escape routes within accommodation spaces.

7.5.2 Method IIC - An automatic sprinkler, fire detection and fire alarm system of an approved type complying with the relevant requirements of the Fire Safety Systems Code shall be so installed and arranged as to protect accommodation spaces, galleys and other service spaces, except spaces which afford no substantial fire risk such as void spaces, sanitary spaces, etc. In addition, a fixed fire detection and fire alarm system shall be so installed and arranged as to provide smoke detection in all corridors, stairways and escape routes within accommodation spaces.

7.5.3 Method IIIC - A fixed fire detection and fire alarm system shall be so installed and arranged as to detect the presence of fire in all accommodation spaces and service spaces, providing smoke detection in corridors, stairways and escape routes within accommodation spaces, except spaces which afford no substantial fire risk such as void spaces, sanitary spaces, etc. In addition, a fixed fire detection and fire alarm system shall be so installed and arranged as to provide smoke detection in all corridors, stairways and escape routes within accommodation spaces.

7.6 Balancing openings or ducts between two enclosed spaces are prohibited except for openings as permitted in 7.1 to 7.5.

7.7 Watertight doors below freeboard deck, which also serve as fire doors are not to be closed automatically in case of fire detection.

8. Ventilation Systems

This item applies to ships constructed on or after 1 January 2016

8.1 Ventilation ducts, in general (17)

8.1.1 In all cargo ships, ventilation ducts, including single and double wall ducts, are to be of steel or equivalent material except flexible bellows constructed of short length not exceeding 600 mm used for connecting fans to the ducting in air-conditioning rooms.

Note: *Unless expressly provided otherwise in paragraph 8.1.6, any other material used in the construction of ducts, including insulation, are to also be non-combustible.*

Short ducts, not generally exceeding 2 m in length and with a free cross-sectional area **(18)** not exceeding 0.02 m^2, need not be of steel or equivalent material, subject to the following conditions:

8.1.1.1 The ducts are to be made of non-combustible material, which may be faced internally and externally with membranes having low flame-spread characteristics **(19)** which is type approved and, in each case, a calorific value **(20)** not exceeding 45 MJ/m^2 of their surface area for the thickness used;

8.1.1.2 The ducts are only used at the end of the ventilation device; and

---

(17) *With respect only to 8.1, a ventilation duct made of material other than steel may be considered equivalent to a ventilation duct made of steel, provided the material is non-combustible and has passed a standard fire test in accordance with Annex 1: Part 3 of the FTP Code as non-load bearing structure for 30 minutes following the requirements for testing "B" class divisions.*

(18) *The term free cross-sectional area means, even in the case of a pre-insulated duct, the area calculated on the basis of the inner dimensions of the duct itself and not the insulation.*

(19) *Reference is made to the Fire Test Procedure Code, Annex 1, Part 5, adopted by IMO by Resolution MSC.61(67). On ships constructed on or after 1 July 2012, the new Fire Test Procedure Code, adopted by IMO by Resolution MSC.307(88), is applicable.*

(20) *Refer to the recommendations published by the International Organization for Standardization, in particular publication ISO 1716:2002, Reaction to the fire tests for building products – Determination of the heat of combustion.*

8.1.1.3 The ducts are not situated less than 600 mm, measured along the duct, from an opening in an "A" or "B" class division, including continuous "B" class ceiling.

8.1.2 The following arrangements are to be tested in accordance with the Fire Test Procedures Code:

8.1.2.1 Fire dampers, including their relevant means of operation, however, the testing is not required for dampers located at the lower end of the duct in exhaust ducts for galley ranges, which must be of steel and capable of stopping the draught in the duct; and

8.1.2.2 Duct penetrations through "A" class divisions. However, the test is not required where steel sleeves are directly joined to ventilation ducts by means of riveted or screwed connections or by welding.

8.1.3 Fire dampers are to be easily accessible. Where they are placed behind ceilings or linings, these ceilings or linings are to be provided with an inspection hatch on which the identification number of the fire damper is marked. The fire damper identification number is to also be marked on any remote controls provided.

8.1.4 Ventilation ducts are to be provided with hatches for inspection and cleaning. The hatches are to be located near the fire dampers.

8.1.5 The main inlets and outlets of ventilation systems are to be capable of being closed from outside the spaces being ventilated. The means of closing are to be easily accessible as well as prominently and permanently marked and are to indicate the operating position of the closing device.

8.1.6 Combustible gaskets in flanged ventilation duct connections are not permitted within 600 mm of openings in "A" or "B" class divisions and in ducts required to be of "A" class construction.

8.1.7 Ventilation openings or air balance ducts between two enclosed spaces are to not be provided except as permitted by B 10.1.

8.2 Arrangement of ducts

8.2.1 The ventilation systems for machinery spaces of category A, vehicle spaces, ro-ro spaces, galleys, special category spaces and cargo spaces are to, in general, be separated from each other and from the ventilation systems serving other spaces except that the galley ventilation systems in cargo ships of less than 4000 GT, need not be completely separated, but may be served by separate ducts from a ventilation unit serving other spaces. In cargo ships of less than 4000 GT, in any case, an automatic fire damper is to be fitted in the galley ventilation duct near the ventilation unit.

8.2.2 Ducts provided for the ventilation of machinery spaces of category A, galleys, vehicle spaces, ro-ro spaces or special category spaces are to not pass through accommodation spaces, service spaces, or control stations unless they comply with paragraph 8.2.4.

8.2.3 Ducts provided for the ventilation of accommodation spaces, service spaces or control stations are to not pass through machinery spaces of category A, galleys, vehicle spaces, ro-ro spaces or special category spaces unless they comply with paragraph 8.2.4.

Note: *For determining fire insulation for trunks and ducts which pass through an enclosed space, the term "pass through" referred to in items 8.2.2, 8.2.3 and 8.2.5 pertains to the part of the trunk/duct contiguous to the enclosed space. See Figure 21.1.*

8.2.4 As permitted by paragraphs 8.2.2 and 8.2.3 ducts are to be either:

8.2.4.1.1 Constructed of steel having a thickness of at least 3 mm for ducts with a free cross-sectional area of less than 0.075 m^2, at least 4 mm for ducts with a free cross-sectional area of between 0.075 m^2 and 0.45 m^2, and at least 5 mm for ducts with a free cross-sectional area of over 0.45 m^2;

8.2.4.1.2 Suitably supported and stiffened;

8.2.4.1.3 Fitted with automatic fire dampers close to the boundaries penetrated; and

8.2.4.1.4 Insulated to "A-60" class standard from the boundaries of the spaces they serve to a point at least 5

m beyond each fire damper; or

8.2.4.2.1 constructed of steel in accordance with paragraphs 8.2.4.1.1 and 8.2.4.1.2; and

8.2.4.2.2 Insulated to "A-60" class standard throughout the spaces they pass through, except for ducts that pass through spaces of category (9) or (10) as defined in item B.4.2.2.

8.2.5 For the purposes of paragraphs 8.2.4.1.4 and 8.2.4.2.2, ducts are to be insulated over their entire cross-sectional external surface. Ducts that are outside but adjacent to the specified space, and share one or more surfaces with it, are to be considered to pass through the specified space, and are to be insulated over the surface they share with the space for a distance of 450 mm past the duct **(21)**.

8.2.6 Where it is necessary that a ventilation duct passes through a main vertical zone division, an automatic fire damper is to be fitted adjacent to the division. The damper is to also be capable of being manually closed from each side of the division. The control location is to be readily accessible and be clearly and prominently marked. The duct between the division and the damper are to be constructed of steel in accordance with paragraphs 8.2.4.1.1 and 8.2.4.1.2 and insulated to at least the same fire integrity as the division penetrated. The damper is to be fitted on at least one side of the division with a visible indicator showing the operating position of the damper.

8.3 Details of fire dampers and duct penetrations

8.3.1 Ducts passing through "A" class divisions are to meet the following requirements:

8.3.1.1 Where a thin plated duct with a free cross sectional area equal to, or less than, 0.02 m^2 passes through "A" class divisions, the opening is to be fitted with a steel sheet sleeve having a thickness of at least 3 mm and a length of at least 200 mm, divided preferably into 100 mm on each side of a bulkhead or, in the case of a deck, wholly laid on the lower side of the decks penetrated;

8.3.1.2 Where ventilation ducts with a free cross-sectional area exceeding 0.02 m^2, but not more than 0.075 m^2, pass through "A" class divisions, the openings are to be lined with steel sheet sleeves. The ducts and sleeves are to have a thickness of at least 3 mm and a length of at least 900 mm. When passing through bulkheads, this length is to be divided preferably into 450 mm on each side of the bulkhead

These ducts, or sleeves lining such ducts, are to be provided with fire insulation. The insulation is to have at least the same fire integrity as the division through which the duct passes; and

8.3.1.3 Automatic fire dampers are to be fitted in all ducts with a free cross-sectional area exceeding 0.075 m^2 that pass through "A" class divisions. Each damper is to be fitted close to the division penetrated and the duct between the damper and the division penetrated is to be constructed of steel in accordance with paragraphs 8.2.4.2.1 and 8.2.4.2.2. The fire damper is to operate automatically, but is to also be capable of being closed manually from both sides of the division. The damper is to be fitted with a visible indicator which shows the operating position of the damper. Fire dampers are not required, however, where ducts pass through spaces surrounded by "A" class divisions, without serving those spaces, provided those ducts have the same fire integrity as the divisions which they penetrate. A duct of cross-sectional area exceeding 0.075 m^2 are to not be divided into smaller ducts at the penetration of an "A" class division and then recombined into the original duct once through the division to avoid installing the damper required by this provision.

Note: *Ducts or pipes with free sectional area of 0,075m^2 or less need not be fitted with fire damper at their passage through Class "A" divisions provided that the requirements of 8.2.2, 8.2.3, B.9.3 and B.8.3 are complied with.*

8.3.2 Ventilation ducts with a free cross-sectional area exceeding 0.02 m^2 passing through "B" class bulkheads are to be lined with steel sheet sleeves of 900 mm in length, divided preferably into 450 mm on

(21) *Refer to note given under item 8.2.2 and 8.2.3 and Figure 21.1*

each side of the bulkheads unless the duct is of steel for this length.

8.3.3 All fire dampers are to be capable of manual operation. The dampers are to have a direct mechanical means of release or, alternatively, be closed by electrical, hydraulic, or pneumatic operation. All dampers are to be manually operable from both sides of the division. Automatic fire dampers, including those capable of remote operation, are to have a failsafe mechanism that will close the damper in a fire even upon loss of electrical power or hydraulic or pneumatic pressure loss. Remotely operated fire dampers are to be capable of being reopened manually at the damper.

8.4 Exhaust ducts from galley ranges

8.4.1 When passing through accommodation spaces or spaces containing combustible materials, the exhaust ducts from galley ranges shall be constructed in accordance with paragraphs 8.2.4.2.1 and 8.2.4.2.2.

Note: *For determining fire insulation for trunks and ducts which pass through an enclosed space, the term "pass through" pertains to the part of the trunk/duct contiguous to the enclosed space. See Figure 21.1.*

Each exhaust duct shall be fitted with:

8.4.1.1 a grease trap readily removable for cleaning;

8.4.1.2 an automatically and remotely operated fire damper located in the lower end of the duct at the junction between the duct and the galley range hood and, in addition, a remotely operated fire damper in the upper end of the duct close to the outlet of the duct;

8.4.1.3 arrangements, operable from within the galley, for shutting off the exhaust and supply fans; and

8.4.1.4 fixed means for extinguishing a fire within the duct. **(22)**

8.4.2 Grease trap, fire damper, fan shut-off and fixed fire extinguishing are only required when a galley exhaust duct passes through accommodation spaces or spaces containing combustible materials. The term "spaces containing combustible materials" will normally apply to all spaces in accommodation.

8.5 Ventilation rooms serving machinery spaces of category A containing internal combustion machinery

8.5.1 Where a ventilation room serves only such an adjacent machinery space and there is no fire division between the ventilation room and the machinery space, the means for closing the ventilation duct or ducts serving the machinery space are to be located outside of the ventilation room and machinery space.

8.5.2 Where a ventilation room serves such a machinery space as well as other spaces and is separated from the machinery space by a "A-0" class division, including penetrations, the means for closing the ventilation duct or ducts for the machinery space can be located in the ventilation room.

8.6 Ventilation of control stations outside machinery spaces

Practicable measures are to be taken for control stations outside machinery spaces in order to ensure that ventilation, visibility and freedom from smoke are maintained so that, in the event of fire, the machinery and equipment contained therein may be supervised and continue to function effectively. Alternative and separate means of air supply are to be provided and air inlets of the two sources of supply are to be so disposed that the risk of both inlets drawing in smoke simultaneously is minimized. At the discretion of Society, such requirements need not apply to control stations situated on, and opening onto, an open deck or where local closing arrangements would be equal effective.

Equally effective local closing arrangements means that in case of ventilators these are to be fitted with fire dampers or smoke dampers which could be closed easily within the control station in order to maintain the absence of smoke in the event of fire.

(22) *Refer to the recommendations published by the International Organization for Standardization, in particular publication ISO 15371:2009, Ships and marine technology – Fire-extinguishing systems for protection of galley cooking equipment.*

8.7 Control of power ventilation

Power ventilation of accommodation spaces, service spaces, cargo spaces, control stations and machinery spaces is to be capable of being stopped from an easily accessible outside the space being ventilated. This position should not be readily cut off in the event of a fire in the spaces served. The means provided for stopping the power ventilation of the machinery spaces shall be entirely separate from the means provided for stopping ventilation of other spaces.

8.8 Closing of ventilation inlets and outlets

The main inlets and outlets of all ventilation systems shall be capable of being closed from outside the spaces being ventilated. The means of closing shall be easily accessible as well as prominently and permanently marked and shall indicate whether the shut-off is open or closed.

Ventilation inlets and outlets located at outside boundaries are to be fitted with closing appliances. Such inlets and outlets need not comply with C.8.2.1

9. Fire Protection Materials

9.1 Use of non-combustible materials

9.1.1 Insulating materials

Insulating materials are to be non-combustible, except in cargo spaces, mail rooms, baggage rooms, and refrigerated compartments of service spaces. Vapour barriers and adhesives used in conjunction with insulation, as well as, the insulation of pipe fittings for cold service system, need not be of non-combustible materials, but they are to be kept to the minimum quantity practicable and their exposed surfaces are to have low flame-spread characteristics.

A division consisting of a non-combustible core and combustible veneers may be accepted as a B or C class division, provided that the non-combustible core is tested in accordance with the FTP Code 2010, part 1, that the B class division is tested in accordance with the FTP Code 2010, part 3, and that the veneers are tested in accordance with the FTP Code 2010 part 5 and part 2, if applicable.

9.1.2 Ceilings and linings

All linings, ceilings, draft stops and their associated grounds are to be of non-combustible materials in the following spaces:

9.1.2.1 In accommodation and service spaces and control stations for ships where method IC is specified as referred in item 2. and

9.1.2.2 In corridors and stairway enclosures serving accommodation and service spaces and control stations for ships where methods IIC or IIIC are specified as referred to in item 2.

9.1.3 Application details to be in accordance with FTP Code 2010, Annex-4.

9.2 Use of combustible materials

9.2.1 General

Non-combustible bulkheads, ceilings and linings fitted in accommodation and service spaces may be faced with combustible materials, facings, mouldings, decorations and veneers provided such spaces are bounded by non-combustible bulkheads, ceilings and linings in accordance with the provisions of items 9.2.2 to 9.2.4 and 9.3.

9.2.2 Maximum calorific value of combustible materials

Combustible materials used on the surfaces and linings specified in item 9.2.1 are to have a calorific value **(5)** not exceeding 45 MJ/m^2 of the area for the thickness used.

The requirements of this item are not applicable to the surfaces of furniture fixed to linings or bulkheads.

9.2.3 Total volume of combustible materials

Where combustible materials are used in accordance with item 9.2.1, they are to comply with the following requirements:

9.2.3.1 The total volume of combustible facings, mouldings, decorations and veneers in accommodation and service spaces are not to exceed a volume equivalent to 2,5 mm. veneer on the combined area of the walls and ceiling linings. Furniture fixed to linings, bulkheads or decks need not be included in the calculation of the total volume of combustible materials; and

9.2.3.2 In the case of ships fitted with an automatic sprinkler system complying with the provisions of FSS Code, the above volume may include some combustible material used for erection of "C" class divisions.

9.2.4 Low flame spread characteristics of exposed surfaces

The following surfaces are to have low flame spread characteristics in accordance with the FTP Code 2010.

9.2.4.1 Exposed surfaces in corridors and stairway enclosures and of ceiling in accommodation and service spaces (except saunas) and control stations; and

9.2.4.2 Surfaces and grounds in concealed or inaccessible spaces in accommodation and service spaces and control stations.

9.3 Smoke generation potential and toxicity

9.3.1 Paints, varnishes and other finishes

Paints, varnishes and other finishes used on exposed interior surfaces are not to be capable of producing excessive quantities of smoke and toxic products, this being determined in accordance with FTP Code 2010. Application details to be in accordance with FTP Code 2010, Annex-4.

This regulation only applies to accommodation spaces, service spaces and control stations as well as stairway enclosures.

9.3.2 Primary deck coverings

Primary deck coverings, if applied within accommodation and service spaces and control stations are to be of approved material which will not give rise to smoke or toxic or explosive hazards at elevated temperatures , this being determined in accordance with FTP Code 2010.

10. Details of Construction

Air spaces enclosed behind ceilings, panelling, or linings, are to be divided by close-fitting draught stops spaced not more than 14 m. apart. In the vertical direction, such air spaces, including those behind linings of stairways, trunks, etc., are to be closed at each deck.

11. Means of Escape

11.1 Means of escape from control stations, accommodation spaces and service spaces

11.1.1 General requirements

11.1.1.1 At all levels of accommodation it is to be provided at least two widely separated means of escape from each restricted space or group of spaces. These escapes to be as widely as possible separated and ready.

11.1.1.2 Stairways and ladders are to be so arranged as to provide ready means of escape to the lifeboat and liferaft embarkation deck from all crew spaces and from spaces in which the crew is normally employed, other than machinery spaces.

11.1.1.3 Unless expressly provided otherwise in this regulation,. a corridor, lobby, or part of a corridor from which there is only one route of escape are to be prohibited.

Dead-end corridors used in service areas which are necessary for the practical utility of the ship, such as fuel oil stations and athwartship supply corridors, are to be permitted, provided such dead-end corridors are separated from crew accommodation areas. Also, a part of a corridor that has a depth not exceeding its width is considered a recess or local extension and is permitted.

11.1.1.4 All stairways in accommodation and service spaces and control stations are to be of steel frame construction except where Türk Loydu sanctions the use of other equivalent material.

11.1.1.5 If a radiotelegraph station has no direct access to the open deck, two means of escape from, or

access to, the station are to be provided, one of which may be a porthole or window of sufficient size or other means to the satisfaction of Türk Loydu.

11.1.1.6 Doors in escape routes shall, in general, open in-way of the direction of escape, except that;

11.1.1.6.1 Individual cabin doors may open into the cabins in order to avoid injury to persons in the corridor when the door is opened, and

11.1.1.6.2 Door in vertical emergency escape trunks may open out of the trunk in order to permit the trunk to be used both for escape and access.

11.1.1.7 Lifts shall not be considered as forming one of the means of escape as required by this regulation.

11.1.2 Escape from spaces below the lowest open deck (23)

Below the lowest open deck the main means of escape are to be a stairway and the second escape may be a trunk or a stairway.

11.1.3 Escape from spaces above the lowest open deck

Above the lowest open deck the means of escape are to be stairways or doors to an open deck or a combination thereof.

11.1.4 Dead-end corridors

No dead-end corridors having a length of more than 7 m. are to be accepted.

11.1.5 Width and continuity of escape routes

The width, number and continuity of escape routes are to be in accordance with the requirements in the FSS Code.

(23) *The "lowest open deck" shall be a category (10) "Open deck" (as defined in SOLAS chapter II-2, regulations 9.2.3.3.2.2 and 9.2.4.2.2.2) at the lowest height from baseline in way of accommodation spaces.*

11.1.6 Dispensation from two means of escape

Exceptionally, dispense may be given with one of the means of escape, for crew spaces that are entered only occasionally, if the required escape route is independent of watertight doors.

11.1.7 Emergency escape breathing devices

11.1.7.1 Emergency escape breathing devices are to comply with the FSS Code. Spare emergency escape breathing devices are to be kept on board.

11.1.7.2 All cargo ships are to carry at least two emergency escape breathing device within accommodation spaces.

11.2 Means of escape from machinery spaces

11.2.1 General

Means of escape from each machinery space are to comply with the following provisions.

11.2.2 Escape from machinery spaces of category A

Note: For application of items 11.2.2.1 and 11.2.2.2 see, UI SC277.

Except as provided in item 11.2.3, two means of escape are to be provided from each machinery space of category A. In particular, one of the following provisions are to be complied with:

11.2.2.1 Two sets of steel ladders as widely separated as possible leading to doors in the upper part of the space similarly separated and from which access is provided to the open deck. One of these ladders shall be located within a protected enclosure that satisfies item 4, category [4] from the lower part of the space it serves to a safe position outside the space. Self-closing fire doors of the same fire integrity are to be fitted in the enclosure. The ladder are to be fixed in such a way that heat is not transferred into the enclosure through non-insulated fixing points. The enclosure are to have minimum internal dimensions of at least 800 mm x 800 mm, and shall have emergency lighting provisions; or

11.2.2.2 One steel ladder leading to a door in the upper part of the space from which access is provided to the open deck and additionally, in the lower part of the space and in a position well separated from the ladder referred to, a steel door capable of being operated from each side and which provides access to a safe escape route from the lower part of the space to the open deck.

11.2.3 Dispensation from two means of escape

A ship of a gross tonnage less than 1000 may be dispensed with one of the means of escape, due regard being paid to the dimensions and disposition of the upper part of the space.

In addition, the means of escape from machinery spaces of category A, need not comply with the requirement for an enclosed fire shelter listed in item 11.2.2.1.

In the steering gear space, a second means of escape are to be provided when the emergency steering position is located in that space unless there is direct access to the open deck**.**

11.2.4 Escape from machinery spaces other than those of category A

From machinery spaces other than those of category A, two escape routes are to be provided except that a single escape route may be accepted for spaces that are entered only occasionally and for spaces where the maximum travel distance to the door is 5 m. or less.

Steering gear spaces which do not contain the emergency steering position need only have one means of escape.

Steering gear spaces containing the emergency steering position can have one means of escape provided it leads directly onto the open deck. Otherwise, two means of escape are to be provided but they do not need to lead directly onto the open deck.**(24)**

11.2.5 Escape from machinery control rooms in machinery spaces of category "A"

For ships constructed on or after 1 January 2016, two means of escape shall be provided from the machinery control room located within a machinery space. At least one of these escape routes shall provide a continuous fire shelter to a safe position outside the machinery space.

***Note**: For application of item 11.2.4, see UI SC277.*

11.2.6 Escape from main workshops in machinery spaces of category "A"

For ships constructed on or after 1 January 2016, two means of escape shall be provided from the main workshop within a machinery space. At least one of these escape routes shall provide a continuous fire shelter to a safe position outside the machinery space.

11.2.7 Inclined ladders and stairways

For ships constructed on or after 1 January 2016, all inclined ladders/stairways fitted to comply with item 11.2.2 with open treads in machinery spaces being part of or providing access to escape routes but not located within a protected enclosure shall be made of steel. Such ladders/stairways shall be fitted with steel shields attached to their undersides, such as to provide escaping personnel protection against heat and flame from beneath.

11.2.8 Emergency escape breathing devices

11.2.8.1 On all ships, within the machinery spaces, emergency escape breathing devices are to be situated ready for use at easily visible places, which can be reached quickly and easily at any time in the event of fire. The location of emergency escape breathing devices is to take into account the layout of the machinery space and the number of persons normally working in the spaces.

11.2.8.2 The number and location of these devices are to be indicated in the fire control plan.

(24) *Escape routes that pass only through stairways and/or corridors that have fire integrity protection equivalent to steering gear spaces are considered as providing a "direct access to the open deck".*

11.2.8.3 Emergency escape breathing devices are to comply with the FSS Code.

12. Miscellaneous Items

The cargo holds and machinery spaces must be capable of being effectively sealed such as to prevent the inlet of air. Doors fitted in boundary bulkheads of machinery spaces of category A are to be reasonably gastight and self-closing.

13. Protection of Cargo Spaces

Fire-extinguishing arrangements according to Chapter 4, Section 18 are to be provided for cargo spaces.

14. Protection of Ro/Ro Cargo Spaces

14.1 Fixed fire-extinguishing systems

14.1.1 Vehicle spaces and ro-ro spaces which are not special category spaces and are capable of being sealed from a location outside of the cargo spaces are to be fitted with a fixed gas fire-extinguishing system which are to comply with the provisions of the FSS Code.

14.1.2 Ro-ro and vehicle spaces not capable of being sealed and special category spaces are to be fitted with a fixed pressure water spraying system for manual operation of an approved type which are to protect all parts of any deck and vehicle platform in such spaces.

14.2 Ventilation system

14.2.1 Capacity of ventilation systems

Closed vehicle and ro-ro spaces are to be provided with an effective power ventilation system sufficient to give at least 6 air changes per hour.

14.2.2 Performance of ventilation systems

14.2.2.1 The ventilation fans shall normally be run continuously and give at least the number of air changes required in paragraph 14.2.1 whenever vehicles are on board, except where an air quality control system in accordance with paragraph 14.2.2.4 is provided. Where this is impracticable, they shall be operated for a limited period daily as weather permits and in any case for a reasonable period prior to discharge, after which period the ro-ro or vehicle space shall be proved gas-free. One or more portable combustible gas detecting instruments shall be carried for this purpose. The system shall be entirely separate from other ventilation systems.

14.2.2.2 Ventilation ducts serving ro-ro or vehicle spaces are to be capable of being effectively sealed for each such space. The system is to be capable of being controlled from a position outside such spaces.

14.2.2.3 The ventilation system is to be such as to prevent air stratification and the formation of air pockets.

14.2.2.4 Where an air quality control system is provided based on the guidelines **(16)**, the ventilation system may be operated at a decreased number of air changes and/or a decreased amount of ventilation. This relaxation does not apply to spaces to which at least ten air changes per hour is required by Chapter 5 Electrical Installation Section 16 B.2.1 and spaces subject to item 15.1 and Chapter 4 Machinery Section 18 B.12.

14.2.3 Indication of ventilation systems

Means are to be provided on the navigation bridge to indicate any lost of the required ventilating capacity.

14.2.4 Closing appliances and ducts

Arrangements are to be provided to permit a rapid shutdown and effective closure of the ventilation system from outside of the space in case of fire, taking into account the weather and sea conditions.

Ventilation ducts, including dampers are to be made of steel.

14.2.5 Permanent openings

Permanent openings in side plating, the ends or deckhead of the space are to be so situated that a fire in the cargo space does not endanger stowage areas and embarkation stations for survival craft and accommodation spaces, service spaces and control stations in superstructures and deckhouses above the cargo spaces.

14.3 Detection and alarm

It is to be provided a fixed fire detection and fire alarm system complying with the requirements of the FSS Code.

Except open ro-ro spaces and open vehicle spaces, a sample extraction smoke detection system complying with the requirements of the FSS Code may be used as an alternative for the fixed fire detection and fire alarm system required above.

15. Special Requirements for Ships Carrying Dangerous Goods

15.1 Ventilation

Adequate power ventilation is to be provided in enclosed cargo spaces. The arrangement are to be such as to provide for at least six air changes per hour in the cargo space based on an empty cargo space and for removal of vapors from the upper or lower parts of the cargo space, as appropriate.

The fans are to be such as to avoid the possibility of ignition of flammable gas air mixtures. Suitable wire mesh guard is to be fitted over inlet and outlet ventilation openings.

Natural ventilation is to be provided in enclosed cargo spaces intended for the carriage of solid dangerous goods in bulk, where there is no provision for mechanical ventilation.

For details of fan, mesh and other ventilation equipment, see **TL** Machinery Rules, Sec.18.

15.2 Insulation of machinery space boundaries

Bulkheads forming boundaries between cargo spaces and machinery spaces of category A are to be insulated to "A-60" standard, unless the dangerous goods are stowed at least 3 m. horizontally away from such bulkheads. Other boundaries between such spaces are to be insulated to "A-60" standard.

15.3 Separation of spaces

15.3.1 In ships having ro-ro spaces, a separation are to be provided between a closed ro-ro space and an adjacent open ro-ro space. The separation are to be such as to minimize the passage of dangerous vapors and liquids between such spaces. Alternatively, such separation need not be provided if the ro-ro space is considered to be a closed cargo space over its entire length and shall fully comply with requirements of item 14.

15.3.2 In ships having ro-ro spaces, a separation are to be provided between a closed ro-ro space and the adjacent weather deck. The separation are to be such as to minimize the passage of dangerous vapours and liquids between such spaces. Alternatively, a separation need not be provided if the closed ro-ro spaces are in accordance with those required for the dangerous goods carried on the adjacent weather deck.

D. Rules on Fire Protection for Cargo Ships of less than 500 GT

Refer to Part C Chapter 35- Tentative Rules for Ships less than 500 GT-(Chapter 35-D-Fire Safety).

E. Rules on Fire Protection for Oil Tankers and Combination Carriers of 500 GT and Over

(These requirements are additional to those of C. except as provided otherwise in item 2.3)

1. Application of Requirements for Tankers

1.1 Requirements for tankers in this subsection are to apply to tankers carrying crude oil or petroleum products having a flashpoint not exceeding 60 °C (closed cup test), as determined by an approved flashpoint apparatus, and a Reid vapour pressure which is below atmospheric pressure or other liquid products having a similar fire hazard.

1.2 Where liquid cargoes other than those referred to in 1.1 or liquefied gases which introduce additional fire hazards are intended to be carried, additional safety measures are to be required, having due regard to the provisions of the International Bulk Chemical Code, the Bulk Chemical Code, the International Gas Carrier Code and the Gas Carrier Code, as appropriate.

1.3 Tankers carrying petroleum products having a flashpoint exceeding 60°C (closed cup test) as determined by an approved flashpoint apparatus are to comply with the requirements for cargo ships other than tankers, except that, in lieu of the fixed fire extinguishing system, they are to be fitted with a fixed deck foam system which are to comply with the provisions of the FSS Code.

1.4 Chemical tankers and gas carriers are to comply with the requirements of this subsection, except where alternative and supplementary arrangements are provided to the satisfaction of TL, having due regard to the provisions of the International Bulk Chemical Code and the International Gas Carrier Code, as appropriate.

2. Cargo Areas

2.1 Separation of cargo oil tanks

2.1.1 Cargo pump-rooms, cargo tanks, slop tanks and cofferdams are to be positioned forward of machinery space. However, oil fuel bunker tanks need not be forward of machinery spaces. Cargo tanks and slop tanks are to be isolated from machinery spaces by cofferdams, cargo pump rooms, oil bunker tanks or ballast tanks.

Pump-rooms containing pumps and their accessories for ballasting those spaces situated adjacent to cargo tanks and slop tanks and pumps for fuel oil transfer are to be considered as equivalent to a cargo pump room within the context of this rule provided that such pump rooms have the same safety standard as that required for cargo pump rooms.

Pump-rooms intended solely for ballast transfer need not comply with the requirements of Chapter 4 Machinery Section 20 C.7. The requirements of Chapter 4 Machinery Section 20 C.7 are only applicable to the pump-rooms, regardless of their location, where pumps for cargo, such as cargo pumps, stripping pumps, pumps for slop tanks, pumps for COW or similar pumps are provided (Refer also to MSC/Circ.1037 and MSC/Circ.1120 amended by MSC1. Circ 1436).
“Similar pumps” includes pumps intended for transfer of fuel oil having a flashpoint of less than 60 °C. Pump rooms intended for transfer of fuel oil having a flashpoint of not less than 60°C need not comply with the requirements of Chapter 4 Machinery Section 20 C.7.

2.1.2 Main cargo control stations, control stations, accommodation and service spaces (excluding isolated cargo handling gear lockers) are to be positioned aft of cargo tanks, slop tanks, and spaces which isolate cargo or slop tanks from machinery spaces, but not necessarily aft of the oil fuel bunker tanks and ballast tanks, and are to be arranged in such a way that a single failure of a deck or bulkhead is not to permit the entry of gas or fumes from the cargo tanks into main cargo control stations, control stations, or accommodation and service spaces.

2.1.3 In combination carriers only; the slop tanks are to be surrounded by cofferdams except where the boundaries of the slop tanks are part of the hull, main cargo deck, cargo pump room bulkhead or oil fuel bunker tank. These cofferdams are not to be open to a double bottom, pipe tunnel, pump room or other enclosed space.

2.1.4 Where the fitting of a navigation position above the cargo area is shown to be necessary, it is to be for navigation purpose only and it is to be separated from the cargo tank deck by means of an open space with a height of at least 2 m.

Cofferdam is an isolating space between two adjacent steel bulkhead or decks. The minimum distance between the two bulkheads or decks is to be sufficient for safe access and inspection. In order to meet the single failure principle, in the particular case when a corner-to-corner situation (see figure 21.2) occurs, this principle may be met by welding a diagonal plate across the corner. No cargo, wastes or other goods are to be contained in cofferdams.

2.2 Restriction on boundary openings

2.2.1 Except as permitted in item 2.2.2, access doors air inlets and openings to accommodation spaces, service spaces, control stations and machinery spaces are not to face the cargo area. They are to be located on the transverse bulkhead not facing the cargo area or on the outboard side of the superstructure or deckhouse at a distance of at least 4 % of the length of the ship, but not less than 3 m. from the end of the superstructure or deckhouse facing the cargo area. This distance need not to exceed 5 m.

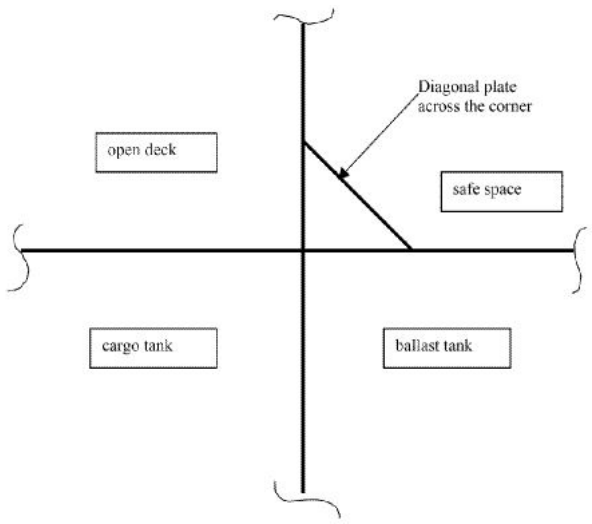

Figure 21.2 Corner to corner situation in a cofferdam

2.2.2 TL may permit access doors in boundary bulkheads facing the cargo area or within the 5 m. limits specified in item 2.2.1, to main cargo control stations and to such service spaces used as provision rooms, store rooms and lockers, provided they do not give access directly or indirectly to any other space containing or providing for accommodation, control stations or service spaces such as galleys, pantries or workshops, or similar spaces containing source of vapour ignition. The boundary of such a space are to be insulated to “A-60” class standard, with the exception of the boundary facing the cargo area.

2.2.3 Windows and sidescuttles facing the cargo area and on the sides of the superstructures and deckhouses within the limits specified in item 2.2.1 are to be of the fixed (non-opening) type. Such windows and sidescuttles, except wheelhouse windows, are to be constructed to “A-60” class standard, except that “A-0” class standard is acceptable for windows and sidescuttles outside the limit specified in item 4.6

2.2.4 Permanent approved gastight lighting enclosures for illuminating cargo pump rooms may be permitted in bulkheads and decks separating cargo pump rooms and other spaces provided they are of adequate strength and integrity and gastightness of the bulkhead or deck is maintained.

2.2.5 An access to a deck foam system room (including the foam tank and the control station) can be permitted within the limits mentioned in 2.1, provided that the conditions listed in 2.2 are satisfied and that the door is located flush with the bulkhead.

2.2.6 The navigation bridge external doors and windows which are located within the limits of 2.1 are to be tested for gastightness. If a water hose test is applied, the following may be taken as a guide:

Nozzle diameter: minimum 12 mm;

- Water pressure just before the nozzle: not less than 0.2 N/mm^2; and

- Distance between the nozzle and the doors or windows: maximum 1.5 m.

2.3 Thermal and structural subdivision

2.3.1 Application

For tankers, only method IC as defined in C. are to be used.

2.3.2 Fire integrity of bulkheads and decks

2.3.2.1 In lieu of item C.4, and in addition to complying with the specific provisions for fire integrity of bulkheads and decks, the minimum fire integrity of bulkheads and decks are to be as prescribed in Tables 21.7 and 21.8

2.3.2.2 Tables 21.7 and 21.8 are to apply respectively to the bulkhead and decks separating adjacent spaces.

2.3.2.3 For determining the appropriate fire integrity standards to be applied to divisions between adjacent spaces, such spaces are classified according to their fire risk as shown in categories [1] to [10] below. Where the contents and use of a space are such that there is a doubt as to its classification for the purpose of this regulation, or where it is possible to assign two or more classifications to a space, it is to be treated as a space within the relevant category having the most stringent boundary requirements. Smaller, enclosed rooms within a space that have less than 30% communicating openings to that space are considered separate spaces. The fire integrity of the boundary bulkheads of such

smaller rooms are to be as prescribed in Tables 21.7 and 21.8. The title of each category is intended to be typical rather than restrictive. The number in parentheses preceding each category refers to the applicable column or row in the Tables.

[1] Control stations

- Spaces containing emergency sources of power and lighting.
- Wheelhouse and chartroom.
- Spaces containing the ship's radio equipment.
- Fire control stations
- Control room for propulsion machinery when located outside the machinery space.
- Spaces containing centralized fire alarm equipment.

[2] Corridors

- Corridors and lobbies.

[3] Accommodation spaces

- Spaces used for public spaces, lavatories, cabins, offices, hospitals, cinemas, games and hobbies rooms, barber shops, pantries containing no cooking appliances and similar spaces.

[4] Stairways

- Interior stairways, lifts, totally enclosed emergency escape trunks and escalators (other than those wholly contained within the machinery spaces) and enclosures thereto.
- In this connection, a stairway which is enclosed only at one level are to be regarded as part of the space from which it is not separated by a fire door.

[5] Service spaces (low risk)

- Lockers and store-rooms not having provisions for the storage of flammable liquids and having areas less than 4 m^2 and drying rooms and laundries.
- Distribution boards may be located behind panels/linings within accommodation spaces including stairway enclosures, without the need to categorize the space, provided no provision is made for storage. Identifiable spaces having adeck area of less than 4 m^2 in which distribution boards are located are to be evaluated in this category.

[6] Machinery spaces of category A

- Spaces and trunks to such spaces which contain:
- Internal combustion machinery used for main propulsion; or
- Internal combustion machinery used for purposes other than main propulsion where such machinery has in the aggregate a total power output of not less than 375 kW; or
- Any oil-fired boiler or oil fuel unit or any oil-fired equipment other than boilers, such as inert gas generators, incinerators, etc..

[7] Other machinery spaces

- Electrical equipment rooms (auto-telephone exchange and air-conditioning duct spaces)
- Spaces, other than machinery spaces of category A, containing propulsion machinery, boilers, oil fuel units, steam and internal combustion engines, generators and major electrical machinery, oil filling stations, refrigerating, stabilizing, ventilation and air conditioning machinery, and similar spaces, and trunks to such spaces.

[8] Cargo pump rooms

- Spaces containing cargo pumps and entrances

and trunks to such spaces.

[9] Service spaces (high risk)

- Galleys, pantries containing cooking appliances, saunas, paint lockers and store-rooms having areas of 4 m^2 or more, spaces for the storage of flammable liquids, and workshops other than those forming part of the machinery spaces.

[10] Open decks

- Open deck spaces and enclosed promenades having little or no fire risk. To be considered in this category, enclosed promenades are to have no significant fire risk, meaning that furnishings are to be restricted to deck furniture. In addition,

  such spaces are to be naturally ventilated by permanent openings.

- Air spaces (the space outside superstructures and deckhouses).

Note:
See Chapter 4 - Machinery, Section 16 V.6 for storage of gas bottles on the open deck that are used for domestic purposes.

2.3.3 Continuous "B" class ceilings or linings, in association with the relevant decks or bulkheads, may be accepted as contributing wholly or in part, to the required insulation and integrity of a division.

2.3.4 External boundaries which are required in item 2.3.1 to be of steel or other equivalent material may be pierced for the fitting of windows and sidescuttles provided that there is no requirement for such boundaries to have "A" class integrity.

Similarly, in such boundaries which are not required to have "A" class integrity, doors may be of materials which are to the satisfaction of **TL**.

2.3.5 Exterior boundaries of superstructures and deckhouses enclosing accommodation and including any overhanging decks which support such accommodation are to be constructed of steel and insulated to “A-60” standard for the whole of the portions which face the cargo area and on the outward sides for a distance of 3 m. from the end boundary facing the cargo area.

The distance of 3 m. is to be measured horizontally and parallel to the middle line of the ship from the boundary which face the cargo area at each deck level. In the case of the sides of those superstructures and deckhouses, such insulation is to be carried up to the underside of the deck of the navigation bridge.

For the portions which face the cargo area, the “A-60” class insulation should be provided up to the underside of the deck of the navigation bridge.

2.3.6 Skylights to cargo pump-rooms are to be of steel, are not to contain any glass and be capable of being closed from outside the pump room.

2.3.7 Construction and arrangement of saunas are to comply with item B,16.

Table 21.7 Fire integrity of bulkheads separating adjacent spaces

Spaces		[1]	[2]	[3]	[4]	[5]	[6]	[7]	[8]	[9]	[10]
Control stations	[1]	**(3)** A-0	A-0	A-60	A-0	A-15	A-60	A-15	A-60	A-60	**(6)**
Corridors	[2]		C	B-0	B-0 **(1)** A-0	B-0	A-60	A-0	A-60	A-0	**(6)**
Accommodation spaces	[3]			C	B-0 **(1)** A-0	B-0	A-60	A-0	A-60	A-0	**(6)**
Stairways	[4]				B-0 **(1)** A-0	B-0 **(1)** A-0	A-60	A-0	A-60	A-0	**(6)** **(6)**
Service spaces (Low risk)	[5]					C	A-60	A-0	A-60	A-0	**(6)**
Machinery spaces of category A	[6]						**(6)**	A-0	**(4)** A-0	A-60	**(6)**
Other machinery spaces	[7]							**(2)** A-0	A-0	A-0	**(6)**
Cargo pump rooms	[8]								**(6)**	A-60	**(6)**
Service spaces (High risk)	[9]									**(2)** A-0	**(6)**
Open decks	[10]										-

Notes to be applied to Tables 21.7 and 21.8, as appropriate

(1) *For clarification as to which applies, see items C.3 and C.5.*

(2) *Where spaces are of the same numerical category and* ***(2)*** *appears, a bulkhead or deck of the rating shown in the Tables in only required when the adjacent spaces are for a different purpose, e.g. in category [9]. A galley next to a galley does not require a bulkhead but a galley next to a paint room requires an "A-0" bulkhead.*

(3) *Bulkheads separating the wheelhouse, chartroom and radio room from each other may be "B-0" rating.*

(4) *Bulkheads and decks between cargo pump rooms and machinery spaces of category A may be penetrated by cargo pump shaft glands and similar gland penetrations, provided that gastight seals with efficient lubrication or other means of ensuring the permanence of the gas seal are fitted in way of the bulkhead or deck.*

(5) *Fire insulation need not be fitted if the machinery space in category [7] has little or no fire risk.*

(6) *Where a* ***(6)*** *appears in the Tables, the division is required to be of steel or other equivalent material but is not required to be of "A" class standard.*

Table 21.8 Fire integrity of decks separating adjacent spaces

Space above → **Space below ↓**		**[1]**	**[2]**	**[3]**	**[4]**	**[5]**	**[6]**	**[7]**	**[8]**	**[9]**	**[10]**
Control stations	[1]	A-0	A-0	A-0	A-0	A-0	A-60	A-0	-	A-0	**(6)**
Corridors	[2]	A-0	**(6)**	**(6)**	A-0	**(6)**	A-60	A-0	-	A-0	**(6)**
Accommodation spaces	[3]	A-60	A-0	**(6)**	A-0	**(6)**	A-60	A-0	-	A-0	**(6)**
Stairways	[4]	A-0	A-0	A-0	**(6)**	A-0	A-60	A-0	-	A-0	**(6)**
Service spaces (Low risk)	[5]	A-15	A-0	A-0	A-0	**(6)**	A-60	A-0	-	A-0	**(6)**
Machinery spaces of category A	[6]	A-60	A-60	A-60	A-60	A-60	**(6)**	**(5)** A-60	A-0	A-60	**(6)**
Other machinery spaces	[7]	A-15	A-0	A-0	A-0	A-0	A-0	**(6)**	A-0	A-0	**(6)**
Cargo pump rooms	[8]	-	-	-	-	-	**(4)** A-0	A-0	**(6)**	-	**(6)**
Service spaces (High risk)	[9]	A-60	A-0	A-0	A-0	A-0	A-60	A-0	-	**(2)** A-0	**(6)**
Open decks	[10]	**(6)**	**(6)**	**(6)**	**(6)**	**(6)**	**(6)**	**(6)**	**(6)**	**(6)**	-

See notes under Table 21.7.

SECTION 22

CORROSION PROTECTION

A. Fundamentals of Corrosion Protection

1. Field of Application

1.1 This section deals with the corrosion protection measures specified by **TL** for seagoing steel ships and the guidelines as a supplement to corrosion prevention, coating systems, planning and application. Details of the documentation necessary for setting up the corrosion protection system are also laid down herein (planning, application, supervision etc.).

1.2 Corrosion protection measures for other types of ship built by various kinds of material other than steel, e.g. aluminum, is to be agreed upon by **TL**.

1.3 Requirements and standards applicable to the contractors carrying out the work and the quality control are subject to the conditions specified in Section 1, N.1.1 and 1.2.

1.4 Any restrictions which may be in force concerning the applicability of certain corrosion protection systems for special types of vessels (e.g. tankers and bulk carriers) must be dealt with.

2. Shop Primers

2.1 As a rule, shop primers are used to provide protection for steel parts during storage, transportation and work processes until further surface preparation is carried out.

2.2 As specified by the manufacturers, shop primers with a thickness of 15 µm to 20 µm are applied. Under normal shipyard conditions, this should provide corrosion protection for a period of approximately 6 months.

2.3 The coating must be of good resistance to withstand the mechanical stresses incurred during the fabrication of the steel material in the shipbuilding process.

2.4 Flame-cutting and welding speed are not to be unduly impaired. It must be ensured that welding with all welding processes customary in the building of ships can be conducted without impermissibly impairing the quality of the weld seams see Chapter 3, Welding Section 6.

2.5 Due to the possible strain imposed to the system by cathodic protection, seawater and chemicals, only alkali-fast and non-hydrolyzable shop primers are to be used.

2.6 The suitability and compatibility of the shop primer in the corrosion protection system is to be guaranteed by the manufacturer of the coating system.

3. Approvals

3.1 Only those over-weldable shop primers may be used for which **TL** has issued a confirmation of acceptability based on a porosity test in accordance with the Chapter 3, Welding Section 6.

4. Hollow Spaces

4.1 Hollow spaces, such as those in closed box girders, tube supports and alike, which can either be shown to be airtight or are accepted as such from normal shipbuilding experience, need not have their internal surfaces protected. During construction, however, such hollow spaces must be kept clean and dry.

5. Use of Dissimilar Metals

5.1 Preventive measures are to be taken to avoid galvanic (contact) corrosion associated with the use of dissimilar metals, electrically in contact with each other, having different potentials in an electrolyte solution, such as seawater.

5.2 In addition to selecting compatible materials, preventive steps, such as suitable insulation, an effective coating and the application of cathodic protection, shall be taken in order to prevent galvanic corrosion.

6. Corrosion due to Stray Current

6.1 For protection against corrosion arising from stray currents, such as those occurring due to inappropriate direct-current electrical supply to the ship for welding or lighting, as well as those arising from direct-current supplies to other facilities (e.g. shore cranes) and neighboring ships, the provision of (even additional) cathodic protection by means of sacrificial anodes is not suitable.

6.2 Steps are to be taken to prevent the formation of stray currents, and a suitable electric drainage is to be provided.

6.3 Particularly, in the event of lengthy outfitting periods, welding rectifiers are to be so arranged that stray currents can be eliminated.

7. Corrosion Protection of Tanks

7.1 Corrosion Protection of Ballast Water Tanks

Note:
On December 8, 2006 the International Maritime Organization (IMO) has adopted a Performance Standard for Protective Coatings (PSPC). This new coating standard applies to ballast water tanks and double-side skin spaces arranged in bulk carriers of 150 m in length of new-buildings and in dedicated seawater ballast tanks of all type of ships of not less than 500 gross tonnage as settled in the Resolution MSC.215(82) (See also UI SC223).

With the new standard, technical regulations for the coating of ballast water tanks come into force as well as inspection and verification items. These are statutory requirements for new-buildings which have to be observed and fulfilled.

7.1.1 All seawater ballast tanks must be provided with a corrosion protection system.

The following tanks shall not be considered to be dedicated seawater ballast tanks and shall therefore be exempted from the application and requirement of the Performance standard for protective coatings for dedicated seawater ballast tanks in all types of ships and double-side skin spaces of bulk carriers (resolution MSC.215(82)), provided the coatings applied in the tanks described in paragraphs 2. and 3. below are confirmed by the coating manufacturer to be resistant to the media stored in these tanks and provided such coatings are applied and maintained according to the coating manufacturer's procedures.

1. Ballast tank identified as "Spaces included in Net Tonnage" in the 1969 ITC Certificate;

2. Sea water ballast tanks in passenger vessels also designated for the carriage of grey water or black water; 3. Sea water ballast tanks in livestock carriers also designated for the carriage of the livestock dung.

On June 11, 2009 IMO has been released a circular numbered MSC.1/Circ.1330 to arrange guidelines for maintenance and repair of protective coatings. This requirement has to be fulfilled for maintenance and repair.

Note: UI SC122 should be applied to ships constructed on or after 1 July 1998 but for which: either the building contract is placed before 1 July 2008; or, in the absence of a building contract, the keels of which are laid or which are at a similar stage of construction before 1 January 2009; or, the delivery of which is before 1 July 2012; and interprets SOLAS II-1/3-2.2 adopted by Resolution MSC.47(66), which is referred to in the amended SOLAS II-1/3-2.3 as adopted by Resolution MSC.216(82).

7.1.2 The following corrosion protection systems are to be used:

- Coatings.

- Coatings and cathodic protection.

7.2 Corrosion Protection of Cargo Oil Tanks of Crude Oil Tankers

Note:
On May 14, 2010 the International Maritime Organization (IMO) has adopted a Performance Standard for Protective Coatings for cargo oil tanks of crude oil tanker. This new coating standard is settled in the Resolution MSC.288(87). UI SC259 as an interpretation to Resolution MSC.288(87) is also to be applied. With the new standard, technical regulations for the coating of cargo oil tanks come into force as well as inspection and verification items. These are statutory requirements for new-buildings which have to be observed and fulfilled.

For alternative means of corrosion protection for cargo oil tanks of crude oil tankers see resolution MSC.289(87) and also UI SC258.

For requirements applying to normal and higher strength Corrosion Resistant steels when such steel is used as the alternative means of corrosion protection for cargo oil tanks as specified in the performance standard MSC.289 (87) of Regulation 3-11, Part A-1, Chapter II-1 of the SOLAS Convention (Corrosion protection of cargo oil tanks of crude oil tankers), Part A Chapter 2 Material Section 3 B.1.5 shall be applied.

On June 10, 2011 IMO has been released a circular numbered MSC.1/Circ.1399 to arrange guidelines for maintenance and repair of protective coatings of cargo oil tanks of crude oil tankers. This requirement has to be fulfilled for maintenance and repair.

8. Coatings

8.1 General

8.1.1 The terms “coating” is used to refer to paints with high quality.

8.1.2 The coatings must be, in accordance with the manufacturer's specifications, resistant against seawater, coastal water, harbor water and all the pollutants they may contain.

8.1.3 The characteristics, composition and field of application of a coating system must be documented by the manufacturer of the coating material. Details of the coating material, how it is to be processed and its suitability for the coating system must be contained in the product data sheet.

Coating of any colour may be accepted, unless otherwise instructed by the Administration. “Light colour” coating is preferable, and includes colours which facilitate inspection or are easily distinguishable from rust.

8.2 Approvals

8.2.1 For new-buildings, the applied coatings and coating systems must be approved by **TL**. The approvals must be obtained from **TL** Head Office by the manufacturers of the coating materials.

8.2.2 Approval does not constitute confirmation of the suitability and compatibility of the coatings in the corrosion protection system. These points are to be ensured by either the shipyard or the manufacturer of the coating materials.

8.3 Surface preparation

8.3.1 The surface must be prepared according to the specifications by the manufacturer of the coating material.

8.3.2 Surface preparation is subject to specifications in the product data sheet and must correspond to a valid surface quality grade, e.g. SIS 055900, ISO 12944-4, or ISO 8501.

8.3.3 Slag and loose weld spatters must be removed before the coating is applied.

8.3.4 Welded or otherwise attached accessory material (tack plates, lugs etc.) must be completely integrated into the corrosion protection, or otherwise removed.

8.4 Application

8.4.1 The process of application is to be carried out according to the coating manufacturer's instructions.

8.4.2 During application, the ambient conditions and procedural instructions are to be complied with in accordance with the details specified in the manufacturer's instructions and in the approvals.

8.4.3 Surface areas which are obstructed or hard to reach and are thus inadequately exposed to spraying, exposed edges and corners, as well as weld seams, must be stripe coated in advance to achieve a sufficient coating thickness.

8.5 Dry film thickness, DFT

8.5.1 The dry film thickness of the coating systems must be in accordance with approvals and correspond to the minimum DFT requirement for that coating system specified by the manufacturer.

8.5.2 The prescribed coating thickness is the minimum coating thickness which shall not be undercut at any spot of the coated surface.

8.6 Documentation

8.6.1 The work processes involved in setting up a coating system as well as the coating materials to be used must be laid down in a coating plan.

8.6.2 The coating plan for ballast water tanks must be submitted to **TL** for approval.

8.6.3 The coating protocol is to be compiled in such a way that all work steps executed, including surface preparation and coating materials used, are documented.

8.6.4 This documentation is to be compiled by the coating manufacturer and/or the contractor executing the work and/or the shipyard. An inspection plan must be agreed to between the parties involved. The papers pertaining to the documentation must be signed by these parties. On completion of the coating system, the signed papers constituting the documentation are to be handed to **TL** surveyor for approval. The documentation is to contain the following data:

- Location and date.
- Ship and the tanks treated.
- Manufacturer's specifications for the coating system (number of coats, total coating thickness, processing conditions etc.).
- Product data sheet for the coating and **TL** approval number.
- Contractors and personnel carrying out the work, surface preparation (procedure, work materials, ambient conditions etc.).
- Condition of surface prior to coating (cleanness, roughness, existing primer, surface quality grade achieved etc.).
- Application (procedure, number of coats etc.).
- Application conditions (time, surface/ambient temperature, humidity, dew point, ventilation etc.).
- The date the tanks were first ballasted is to be recorded.
- Report of coating thickness measurements and visual inspections.
- Signatures of involved parties (shipyard, coating manufacturer, work contractor etc.).

8.6.5 Coating protocols already in existence and used by coating manufacturers, work contractors, shipyards and ship owners will be accepted by **TL** provided they contain the above data and are signed by all parties involved.

9. Coatings Used with Cathodic Protection

9.1 Coatings

9.1.1 In the case of coatings used in combination with cathodic protection, the provisions under 8 shall apply.

9.1.2 In addition, the coatings must be resistant against the cathodic protection, i.e. the coatings must not exhibit any impairment of their purpose up to a potential of -1200 mV against the copper/copper sulphate electrode. Proof of resistance against cathodic protection may be provided in accordance with recognized standards, e.g. DIN 50928, or similar.

9.2 Cathodic protection

For the cathodic protection of ballast water tanks in combination with coatings, sacrificial anodes made of zinc or aluminum are used. Table 22.1 and Table 22.2 contain recommended alloy compositions for conventional zinc and aluminum anodes respectively. Zinc and aluminum anodes of differing chemical composition may also be used, however proof of the cathodic protection ability is to be provided. Zinc anodes may not be used in the event that operating temperatures in excess of 60ºC can be expected. Impressed current systems are not permitted in ballast water tanks.

Table 22.1 Sacrificial anodes of zinc alloys

Element	TL-Zn1	TL-Zn2
Al	0,10 - 0,50	≤ 0,10
Cd	0,025 - 0,07	≤ 0,004
Cu	≤ 0,005	≤ 0,005
Fe	≤ 0,005	≤ 0,0014
Pb	≤ 0,006	≤ 0,006
Zn	≥ 99,22	≥ 99,88
Potential (T=20ºC)	-1,03V Ag/AgCl/Sea	-1,03V Ag/AgCl/Sea
Q_g (T=20ºC)	780 Ah/kg	780 Ah/kg
Efficiency (T=20ºC)	95%	

Table 22.2 Sacrificial anodes of aluminum alloys

Element	TL-Al1	TL-Al2	TL-Al3
Si	≤ 0,10	≤ 0,10	Si + Fe
Fe	≤ 0,10	≤ 0,13	≤ 0,10
Cu	≤ 0,005	≤ 0,005	≤ 0,05
Mn	N/A	N/A	0,15-0,50
Zn	2,0-6,0	4,0-6,0	2,0-5,0
Ti	-	-	0,01-0,05
In	0,01-0,03	-	0,01-0,05
Sn	-	0,05-0,15	-
Other El.	≤ 0,10	≤ 0,10	≤ 0,15
Al	Remainder	Remainder	Remainder
Potential (T=20ºC)	-1,05V Ag/AgCl/Sea	-1,03V Ag/AgCl/Sea	-1,05V Ag/AgCl/Sea
Q_g (T=20ºC)	2000 Ah/kg	2000 Ah/kg	2700 Ah/kg
Efficiency (T=20ºC)	95%		

10. Corrosion Protection of Cargo Holds

10.1 General

10.1.1 On bulk carriers, all internal and external surfaces of hatch coamings and hatch covers, and all internal surfaces of the cargo holds, excluding the flat tank top areas and the hopper tanks sloping plating approximately 300 mm. below the side shell frame and brackets, are to have an effective protective coating (epoxy coating, or equivalent), applied in accordance with the manufacturer's recommendation. In the selection of coating, due consideration shall be given in consultation with the owner to the intended cargo and conditions expected in service.

For existing bulk carriers, where Owners may elect to coat or recoat cargo holds as noted above, consideration may be given to the extent of the close-up and thickness measurement surveys. Prior to the coating of cargo holds of existing vessels, scantlings are to be ascertained in the presence of a Surveyor.

10.1.2 The coating used must be approved by the manufacturer for application in cargo holds.

10.1.3 The coating manufacturer's instructions with regard to surface preparation as well as application conditions and processing must be adhered to.

10.1.4 The minimum thickness of the coating shall be 250 µm, in the complete area defined under 10.1.1.

10.2 Documentation

10.2.1 The coating plan is to be submitted for approval. A description of the work necessary for setting up a coating system and the coating materials to be used must be contained in the coating plan.

10.2.2 A coating report is to be compiled in such a way that details of all the work processes executed, including the surface preparation as well as the coating materials used, are recorded.

10.2.3 This documentation is to be compiled by the coating manufacturer and/or the contractor executing the work and/or the shipyard. An inspection plan must be agreed to between the parties involved. The papers pertaining to the documentation must be signed by these parties. On completion of the coating system, the signed papers constituting the documentation are to be handed to **TL** surveyor for approval.

11. Corrosion Protection of the Underwater Hull

11.1 General

11.1.1 Vessels intended to be assigned the class notation **IWS** (In-Water Survey) shall provide a suitable corrosion protection system for the underwater hull, consisting of coating and cathodic protection.

11.1.2 Coatings based on epoxy, polyurethane and polyvinyl chloride are considered suitable.

11.1.3 The coating manufacturer's instructions with regard to surface preparation as well as application conditions and processing must be observed.

11.1.4 The coating, system without antifouling, shall have a minimum film thickness of 250 µm, on the complete surface, shall be compatible with cathodic protection in

accordance with recognized standards, and shall be suitable for underwater cleaning by mechanical means.

11.1.5 The cathodic protection can be provided by means of sacrificial anodes or impressed current systems. Under normal conditions for steel, a protection current density of at least 10 mA/m^2 must be ensured.

11.1.6 In the case of impressed current systems, over-protection due to inadequately low potential is to be avoided. A screen (dielectric shield) is to be provided in the immediate vicinity of the impressed current anodes.

11.1.7 Cathodic protection by means of sacrificial anodes is to be designed for one dry-docking period.

11.1.8 In the case of other materials, such as aluminum, special conditions must be agreed with **TL**.

11.2 Documentation

11.2.1 The coating plan and the design data for the cathodic protection are to be submitted to **TL** for examination.

11.2.2 In the case of impressed current systems, the following details must also be submitted:

- Arrangement of the impressed current cathodic protection system.
- Location and constructional integration of the anodes in the vessel's skin.
- Descriptions of how all appendages, e.g. rudder, propeller and shafts, are incorporated into the cathodic protection.
- Electrical supply and distribution systems.
- Design of the dielectric shield.

11.2.3 The work processes involved in setting up the coating system as well as the coating materials to be used must be laid down in the coating plan.

11.2.4 A coating protocol is to be compiled in such a way that details of all the work processes executed, including the surface preparation as well as the coating materials used, are recorded.

11.2.5 This documentation is to be compiled by the coating manufacturer and/or the contractor executing the work and/or the yard. An inspection plan must be agreed to between the parties involved. The papers pertaining to the documentation must be signed by these parties. On completion of the coating system, the signed papers constituting the documentation are to be handed to **TL** surveyor for approval.

11.2.6 In the case of impressed current systems, the functionality of the cathodic protection is to be tested during sea trials. The values obtained for the protection current and voltage must be recorded.

B. General Guidelines for Corrosion Protection

1. Scope of Application

These guidelines contain technical details of corrosion protection and the applicable rules and regulations on ships.

Under the condition that the corresponding conditions are met, they can also be applied to other systems, structural parts and components.

These guidelines are intended to supplement the **TL** Rules for Hull, which are limited to only those aspects which are imperative from the classificatory point of view and which must always be complied with for the construction of ships with **TL** class.

Other national or international provisions and rules must also be taken into account.

2. Limitations

2.1 Corrosion as a natural process cannot be prevented entirely, however it is merely possible to minimize the corrosion rates and its effects.

2.2 The aim should be to reduce the corrosion rate to an acceptable level for a certain system by means of corrosion protection measures, e.g. appropriate

selection of materials, application of the corresponding design principles, suitable coating systems or cathodic protection. As a result, with a high degree of probability, the specified lifetime of the structure is ensured and the least corrosion damage will occur.

2.3 Corrosion and the corrosion rate depend on many different parameters. Application and environmental conditions, material properties, stress and strain present, as well as the effectiveness and efficiency of protective measures all have an influence on corrosion.

2.4 Damage by corrosion can certainly be prevented. The principles and information given in these Guidelines are based on normative standards and values from experience which, applied correctly, will guarantee an adequate degree of corrosion protection for ships and components subjected to marine environment.

2.5 However, this does not absolve the operators and designers from the obligation and responsibility to assess properly the special features of each particular system, structural part or component and to consider the relevant corrosion hazard. In particular, the corrosion protection measures which are applied, their maintenance and the servicing activities must be coordinated to suit the component or the structure and also the specified lifetime.

2.6 In designing the corrosion protection system, the specific contractual conditions and agreements between the customer and the manufacturer must always be taken into account. For the design of the corrosion protection system, the relevant normative references must also be considered.

3. Definitions

Terms and their explanations in respect of corrosion and corrosion protection are defined in ISO 8044, EN ISO 4618, ISO 12944, EN 12473 and DIN 81249.

4. Symbols and Abbreviations

A_G = Total area to be protected,

CPZ = Cathodic Protection Zone

CCP = Cathodic Corrosion Protection,

A_{CPZ} = Area of a cathodic protection zone,

AY = Acrylic resin,

DTZ = Immersed zone,

EP = Epoxy resin,

FB = Shop primer,

f_B = Loading factor,

FRP = Fiber-reinforced plastic,

I_G = Total protective current,

IC = Intergranular corrosion,

I_{CPZ} = Requirement in protective current for a CPZ,

i_{CPZ} = Protective current density of a CPZ,

i_S = Protective current density,

MCU = Synthetic mineral blasting medium, made of copper works' slag,

m_G = Total anode weight,

MKE = Synthetic mineral blasting medium, made of fused corundum,

m_{CPZ} = Anode weight of a CPZ,

MQS = Natural mineral blasting medium, made of silica sand,

PMMA = Polymethylmethacrylate,

PUR = Polyurethane,

Q_g = Electrochemical efficiency of the anode alloy,

R_Z, R_{y5} = Average surface roughness,

CFC = Corrosion fatigue cracking,

SCC = Stress corrosion cracking,

SWZ = Splash zone,

TBT = Tributyltin,

t_S = Protection period,

U_H = Potential against standard hydrogen electrode,

UP = Unsaturated polyester,

W (PRE)= Pitting resistance equivalent,

WTZ = Tidal zone.

C. Corrosion Protection by Structural Design

1. General

Ships, systems and components should be designed with the aim of ensuring optimum corrosion protection through the application of suitable structural measures.

Among others, the following measures have proven their worth in practice:

1.1 Points at which moisture tends to collect, thus facilitating the origination and propagation of corrosion, e.g. gaps and sumps, must be avoided as far as possible.

1.2 The structural design should be such that subsequent activities for the passive and active corrosion protection, such as surface pre-treatment, coating work, inspections and maintenance, can be performed in an optimum manner, e.g. by ensuring good accessibility.

1.3 So-called "shadow effects", which impede the coating work (such as open, deep gaps) must be avoided.

1.4 Accumulations of condensed water in steel structural elements can be avoided by providing sufficient venting possibilities.

1.5 The surfaces must be designed to be as flat as possible. Any stiffeners, internal parts and piping etc. should, wherever possible, be arranged in low risk areas in terms of corrosion.

1.6 The possibility of performing a proper cleaning and pickling, especially in the case of passivatable materials, e.g. austenitic steels, must be provided after the welding process.

1.7 Corrosion by impingement of drops can be avoided by using baffle plates.

1.8 Interrupted welds, or skip welds, such as "chain intermittent welds", are only permissible in zones which are heat-insulated and free of condensed water.

1.9 Burrs and sharp edges should be rounded off in order to facilitate the coating work and to increase the durability of the coating. The minimum radius should be 2 mm.

1.10 Hollow components which are not accessible shall be sealed off completely and permanently, e.g. by welding them closed, in doing so, any applicable safety measures must be taken into consideration.

1.11 Construction using different metals should, if possible, be avoided; otherwise suitable insulating measures shall be applied.

D. Material Selection Against Corrosion

1. General

1.1 Field of application

The recommendations given in this section shall be considered for the selection of materials and in the design of ship components and units, if the corrosion behavior of the material in seawater or marine environment poses a major concern.

1.2 Material selection

The material shall be selected both according to design-related aspects and under consideration of the expected corrosive stress. The use of different materials within a structure shall, in consideration of the statements given in this Section, be limited as much as possible and the materials shall be closer in the galvanic series if used.

1.3 Residues and contamination

Cinders, annealing color, weld spatters, rust, remnants from machining, residues of coatings and dirt shall be removed, if their presence is likely to impair the corrosion resistance or the corrosion protection.

1.4 Welded joints

The welding consumables shall be selected so that the free corrosion potential of the weld material is the same or a little positive in relation to the free corrosion potential of the materials to be joined. The welding rules Chapter 3, issued by **TL** shall be followed.

1.5 Maintenance

During cleaning, it shall be ensured that the metallic coatings or covering layers are not damaged or destroyed.

2. Unalloyed and Low-alloy Steels and Steel Castings

2.1 Scope of application

These Guidelines apply for unalloyed and low-alloy steels and steel castings, as mentioned in the **TL** Rules, Chapter 2, Materials, Sections from 3 to 6.

2.2 Protective measures

2.2.1 Corrosion allowance

If only uniform surface corrosion or shallow pit formation is to be expected, a corrosion allowance can be provided in the component design. According to the literature, the corrosion allowance per year of planned service should be:

- 0.21 mm for wetted surfaces

- 0.10 mm for components and structures which are exposed only to the atmosphere.

For ships and equipment with the class of **TL**, the corrosion allowances according to Chapter 1 Hull, Section 3.B.9 shall always be observed.

A prerequisite for uniform surface corrosion is a uniformly descaled and cleaned surface without fouling. Furthermore, no erosion corrosion must occur as a result of local flow conditions.

2.2.2 Passive or active corrosion protection

This refers to coatings and metallic coatings (passive) as well as a CCP (active) in the sense of these Guidelines. Such additional protective measures shall be used wherever selective corrosion can be expected, e.g. because of structural details.

3. Cast Iron

3.1 Scope of application

These Guidelines apply for cast iron types with spheroidal graphite and laminated graphite, as mentioned in the **TL** Rules, Chapter 2, Material, Section 7.

3.2 Protective measures

3.2.1 Corrosion allowance

If only uniform surface corrosion is to be expected, or also shallow pit formation, a corrosion allowance can be used in the calculations for the component design. According to the literature, the corrosion allowance per year of planned service should be:

- 0.12 mm for wetted surfaces

- 0.06 mm for components and structures which are only exposed to the atmosphere.

For ships and equipment with the class of **TL**, the

corrosion allowances according to the Rules shall be observed in all cases. A prerequisite for uniform area corrosion is a uniform, cleaned surface with an intact and undamaged casting skin without fouling.

Furthermore, no erosion corrosion must occur as a result of local flow conditions.

3.2.2 Passive or active corrosion protection

This refers to coatings and linings (passive) as well as a CCP (active) in the sense of these Guidelines. Such additional protective measures should be used wherever selective corrosion can be expected, e.g. because of structural details or irregularities in the casting surface.

4. Stainless Steel and Stainless Steel Castings

4.1 Scope of application

These Guidelines apply for stainless steels and stainless steel castings of the types mentioned in the **TL** Rules Chapter 2, Materials, Section 3, 5 and 6, Chapter 103.

4.2 Protective measures

Stainless steels and stainless steel castings exhibit a passive surface state in seawater, as is the case in all media which are not too acidic. Accordingly, coating these types of steel is only recommended under special conditions. Depending on the composition and grain structure, stainless steels are sensitive to local corrosion, such as pitting and crevice corrosion.

4.2.1 Pitting and crevice corrosion

4.2.1.1 Alloy composition

Depending on the temperatures to be expected, steels with the following pitting resistance equivalent in seawater are regarded as being resistant to pitting and crevice corrosion.

Table 22.3 Required pitting resistance

Limiting temperature for pitting resistance in seawater [ºC]	Pitting resistance equivalent W (min.)
40	35
25	30
10	25

The pitting resistance equivalent (W) is calculated as follows:

- For austenitic stainless steels alloy with more than 3% molybdenum as well as nickel base alloys:

$$W = \%Cr + 3.3 \cdot \%Mo + 30 \cdot \%N$$

- For the austenitic-ferritic stainless steels X2CrNiMoN22-5-3 (1.4462):

$$W = \%Cr + 3.3 \cdot \%Mo + 16 \cdot \%N$$

- For austenitic stainless steels alloy with less than 3% molybdenum as well as for the austenitic-ferritic steel X3CrNiMoN27-5-2 (1.4460):

$$W = \%Cr + 3.3 \cdot \%Mo$$

4.2.1.2 Cathodic protection

Through cathodic protection, pitting and crevice corrosion can be prevented, whereby in the case of crevice corrosion, the effect of the CCP is limited, depending on the crevice geometry. For the case of pitting corrosion, a reduction in potential to UH = - 0.1 V is sufficient for the austenitic and austenitic-ferritic steels, and UH = - 0.3 V for the martensitic or nickel-martensitic CrNi, CrMo and CrNiMo steels.

Note:
Uncoated stainless steels are not protected cathodically if they are suitable for withstanding the corrosion stress. Coated stainless steels must be cathodically protected in the submerged zone.

4.2.1.3 Design and workmanship

The following fundamental principles shall be observed:

- Crevices shall be avoided as far as possible. If this is not feasible, the crevice should be made as large as possible, i.e. the gap should be wider than it is depth and the width should be larger than 1 mm.

- Flanges shall, if applicable, be made of materials with a greater corrosion resistance.

- Heat transmission paths should be avoided.

- Welds shall be executed in a technically competent manner, e.g. root imperfections and a material sensitivization through incorrect temperature control must be avoided.

- Weld joints must be post-treated in a technically competent manner, e.g. through the removal of annealing colors, scale layers etc.

- Coarse mechanical grinding is not permissible.

- The surface should be as smooth as possible.

- Only suitable processing tools should be used (e.g. stainless steel brush).

4.2.2 Intergranular corrosion (IC)

Steels that are not resistant to **IC** shall only be used in the solution-annealed state. Steels with a reduced carbon content (C = 0.03%) as well as steels stabilized with titanium or niobium exhibit sufficient resistance against **IC**.

4.2.3 Stress corrosion cracking (SCC)

In seawater at temperatures above about 50 °C, chlorine-induced stress corrosion cracking can occur at austenitic stainless steels. At higher temperatures, steels with high contents of molybdenum and especially nickel shall be selected; their suitability shall be checked in each individual case. A high corrosion resistance is exhibited by austenitic-ferritic steels, e.g. the material X2CrNiMoN22-5-3 (1.4462), because of their grain structure.

Martensitic steels tempered for high tenacity require a CCP. However, the protective potential should lie below – 0.5 V (UH) for hardness increases above 350 HV (e.g. through welding) or tenacities above 1000 MPa, otherwise there is a risk of hydrogen embrittlement.

4.2.4 Corrosion fatigue cracking (CFC)

In the case of a vibration stress, steps must be taken to exclude local corrosion attack. On one hand, molybdenum-containing steels must be selected by preference and, on the other, a CCP should be installed. Here too, the protective potential should not lie below 0.5 V (UH) in the case of the higher-strength martensitic steels (Rm > 1000 MPa).

5. Copper and Copper Alloys

5.1 Scope of application

These Guidelines apply for copper, wrought copper alloys and cast copper alloys, as mentioned in the **TL** Rules Chapter 2, Materials Section 9. Oxygenic and oxygen-free types of copper as well as copper-zinc wrought and cast alloys with and without further alloying elements (except for CuZn20Al2 (2.0460)) are generally unsuitable for direct use in seawater.

5.2 Protective measures

The following aspects should be considered:

- There must be a uniform surface condition without edges of cuts, surface damages, local fouling, etc.

- For the formation of a favorable protective coating, commissioning with clean and well-aerated water is necessary.

- Care shall be taken to ensure that the protective layers cannot dry out and become brittle, e.g. during plant outages.

- In the area of application, there should be sufficient convection with flow rates exceeding 0.1 m/s.

- Regarding structural design, Section C is to be observed.

- In the vicinity of the tidal zone, red bronze and tin bronze should not be used if possible, since there is a risk of pitting corrosion.

- The use of copper-aluminum alloys at temperatures above 60 °C is unfavorable. However, this does not apply, for alloys with a

nickel ad-mixture, if an Al content > (8,5 + Ni/2)% is observed.

- Pipework should be designed for a flow rate of at least 0.8 m/s. The upper limit for the flow rate depends on the material and piping diameter. The following values shall not be exceeded for this area, Table 22.4.

6. Aluminum Alloys

6.1 Scope of application

These Guidelines apply for wrought and cast aluminum alloys, as mentioned in the **TL** Rules Chapter 2, Materials, Section 8.

6.2 Protective measures

For hull structures or components of zinc-free aluminum materials which are continuously submerged in seawater, cathodic protection with a protective potential of less than –0.55 V (UH) by sacrificial anodes is required. For zinc-containing aluminum materials, the necessary protective potential must be determined in each individual case. Cathodic protection is also recommended for materials which are subjected to the corrosion stress of the tidal zone.

For aluminum materials which are only exposed to spray water, corrosion protection is not necessary. As a possible corrosion protection measure, the electrolytic anodizing of the aluminum surface has proven its worth for this area.

With aluminum materials, the danger of galvanic corrosion should always be considered. In many cases, a coating is selected for aesthetic reasons or possibly as the basis for an antifouling system. The requirements for corrosion protection shall be observed with such applications. For the underwater parts of ships and other structures made of aluminum alloys, antifoulings based on copper oxide as the effective constituent must not be used, since this can lead to corrosion damage of the substrate metal.

Table 22.4 Maximum flow rates for pipes made of seawater-resistant copper alloys

Material		Max. calculated flow rate [m/s]	
Brief designation	**Number**	**DN ≤ 40**	**DN > 40**
CuZn20A12	2.0460	2,8	3,0
CuNi10Fe1,6Mn CuNi10Fe1Mn	2.1972 2.0872	2,5	3,5
CuNi30Mn1Fe	2.0882	3,1	4,5
CuNi30Fe2Mn2	2.0883	4,5	6,0

7. Galvanic (Contact) Corrosion

Table 22.5 provides information on the hazard of galvanic corrosion for various metallic materials with the same kind or different counterpart materials in seawater. Using the information given therein, it is possible to estimate the suitability or corrosion behavior of bolted or riveted connections, whereby the area of the material to be assessed, in this case the bolt for example, must be viewed as small in relation to that of the base material.

E. Coatings

1. General

Coatings must be suitable for the corresponding application, according to the specifications of the manufacturer. For the maritime sector, this necessitates a resistance against sea-water, brackish-water and harbor-water and against the impurities they contain. The properties, structure and application of a coating system shall be documented and specified by the

coating manufacturer. Information on the coating material, its processing and its suitability within the coating system shall be included in the product datasheets. The selection, surface pre-treatment and application shall be carried out in accordance with the specifications and the instructions of the coating manufacturer.

2. Surface Preparation

In the following, the essential requirements for the surface pre-treatment of;

- Unalloyed and low-alloy steels
- Cast iron
- Stainless steels
- Aluminum alloys
- Copper alloys
- Materials with metallic coatings of zinc or aluminum are stated.

Before abrasive-blasting or mechanical grinding and coating application, all oil and grease residues shall be removed from surfaces contaminated in this way. All other surfaces for which no abrasive-blasting or mechanical grinding is necessary should always be freed from oil, grease, dirt and other contaminants by means of a high-pressure cleaning unit or through dry-ice blasting.

Solid blasting media shall conform with the requirements set out in ISO 11124 or ISO 11126, respectively.

2.1 Surface preparation of unalloyed and low-alloy steels

2.1.1 Abrasive blasting

2.1.1.1 Purity

Within the scope of application of these Guidelines, all steel surfaces shall always be descaled in the pre-production phase (through blasting to surface quality grade "Sa 2½" or, for smaller areas, mechanical grinding) and provided with a suitable shop primer, unless otherwise agreed by the contract.

Before further coatings, renewed surface preparation is needed. The surface quality grades specified in the corresponding coating material/system documentation of the manufacturer shall be complied with. The blasting shall extend at least 25 mm into the adjacent coated surfaces.

A dry blasting process should be used.

2.1.1.2 Blasting agents

As the blasting agents, copper works' slag (MCU), fused corundum (MKE) as well as iron or steel blasting agents can be considered. The use of silica sand (MQS) shall be avoided.

The blasting agents shall be free of dust, salts or other impurities

2.1.1.3 Roughness

The surface roughness R_Z should have the roughness grade "medium" according to ISO 8503-1.

2.1.1.4 Repair of surface defects

Weld spatters, rough-rolled ends, laminations, rolling flaws etc. which have only become apparent immediately before or during the blasting work shall be remedied. Edges and welding seams shall be treated according to Table 22.6 and Table 22.7 and transitions shall be gradual. Further specifications are given in the Shipbuilding and Repair Quality Standard of the IACS.

At points at which extensive repair work must be carried out after blasting, the blasting must be repeated after the repair. At components or structural units which concern the classification the Chapter 2, Rules for Materials, of **TL** shall be observed in addition.

Table 22.5 Influence of galvanic corrosion based on DIN 81249

In contact with material of the subgroup	Material to be assessed, subgroup																	
	Unalloyed and Low-Alloy Steell and Steel Castings and Cast Iron			Stainless Steels and Stainless Steel Castings			Copper and Copper Alloys			Aluminium Alloys			Nickel Alloys			Titanium and Titanium Alloys		
	>	=	<	>	=	<	>	=	<	>	=	<	>	=	<	>	=	<
Unalloyed and Low-Alloy Steels and Steel Castings and Cast Iron	0	0	0	+	+	++	+	+	+	X	X	X	0	0	0	0	0	0
Stainless Steels and Stainless Steel Castings	X	X	XX	0	0	0	0	0	X	0	X	X	0	0	0	0	0	0
Copper and Copper Alloys	X	XX	XX	+	0	0	0	0	0	XX	XX	XX	0	0	0	0	0	0
Aluminium Alloys	+	+	+	0	0	+	+	+	++	0	0	0	+	+	+	0	0	0
Nickel Alloys	X	X	XX	0	0	0	0	0	X	X	X	XX	0	0	0	0	0	0
Titanium and Titanium Alloys	0	X	XX	0	0	0	0	X	XX	X	X	XX	0	0	0	0	0	0

> *The exposed surface area of the material to be large in comparison to that of the material with which it is paired.*

= *The exposed surface area of the material to be assessed is about the same as that of the material with which it is paired.*

< *The exposed surface area of the material to be assessed is small in comparison to that of the material with which it is paired.*

++ *The corrosion of the material to be assessed is reduced strongly.*

+ *The corrosion of the material to be assessed is reduced.*

0 *The corrosion of the material to be assessed is influenced to a negligible extent.*

X *The corrosion of the material to be assessed is increased.*

XX *The corrosion of the material to be assessed is increased to an appreciable extent.*

2.1.1.5 Environmental conditions

For blasting purposes, the surface temperature must lie at least 3 °C above the dewpoint and the relative atmospheric humidity should be a maximum of 90%. To prevent impairments by dust or blasting agents, the blasting activities should not be performed at places near which coating work is being done or coatings have not yet dried properly.

2.1.2 Mechanical grinding

Mechanical grinding is limited to smaller areas, at which coating damage has to be remedied or where, because of the local conditions, no blasting can be performed. A surface condition as per "St 3", or one that is in accordance with the specifications of the coating manufacturer, should be achieved.

The mechanical treatment must not cause any excessive polishing or roughening of the surface. The grinding shall extend at least 25 mm into the adjacent coated surfaces.

2.1.3 Pressurized water blasting with solid blasting agents

Pressurized water blasting with solid blasting agents should be limited to the areas that cannot be processed conventionally. This work shall be performed according to an approved specification, which must be matched to the coating system by the coating manufacturer.

2.2 Surface preparation of cast iron

For cast iron as a coating substrate, the same prerequisites as for steel apply in principle. However, in contrast to rolling scale, the relatively thin casting skin need not be removed. The surface roughness is greater than steel.

2.3 Surface preparation of stainless steels

2.3.1 Cleaning

Blasting must be performed with ferrite-free blasting agents (proportion of metallic iron: max. 0.1%). The blasting agents shall not have been used on ferritic materials beforehand. All adherent weld spatter, welding beads and welding cinders must be removed. Brushes, pick hammers, spatulas and scrapers shall be made of stainless austenitic steel. Non-metallic brushes are permissible.

Abrasive media must be ferrite-free and must not contain an insert of steel wire.

Abrasive disks or belts must not have been used on ferritic components beforehand. For the purity not achieved by blasting, a metallic smooth surface on the basis of surface quality grade "St 3" or "P St 3" is required.

Annealing colors must generally be removed by pickling or blasting. Grinding is permissible in exceptional cases. The pickling solution must not contain any hydrochloric acid. After pickling, the surface must be neutralized by thorough washing with fresh water, especially in crevices. As a matter of principle, it must be ensured that components that are no longer to be subjected to surface treatment are protected against ferritic abrasion, e.g. during storage: rust films, sparks from flame-cutting, welding or grinding.

If foreign contamination cannot be removed by the above-mentioned procedures and agents, suitable measures shall be taken after agreement has been reached.

2.3.2 Roughness

For the primer, the average surface roughness R_Z shall be 30 – 45 µm. In confined spaces for which this surface roughness can only be achieved with difficulty, owing to the polishing effect of the blasting agent, metal sheets with a defined surface roughness of 50 µm can also be used. This parts must be cleaned thoroughly before the coating is applied, e.g. by dry-ice blasting.

For surfaces which are to remain uncoated, the roughness should be as low as possible.

The blasting agent’s grain size and shape shall be selected so that sharp-edged surface is attained for

the components to be coated, and a smooth, fine surface for components which are to remain uncoated.

2.4 Surface preparation of copper alloys and of materials with metallic coatings of zinc or aluminum materials

The components shall be thoroughly cleaned and degreased. The cleaning procedure shall be coordinated with the coating manufacturer.

The following procedures are permissible:

- Cleaning with cold detergent and subsequent washing with fresh water
- Steam jet cleaning with dosing of chemicals
- High-pressure cleaning with dosing of chemicals
- Light blasting
- Dry-ice blasting

Immediately after cleaning/degreasing and drying, the components shall be treated with a wash primer or with a suitable coating material which acts as an adhesion promoter and finish coat at the same time.

2.5 Surface preparation of aluminum alloys

2.5.1 Degreasing

All surfaces must be thoroughly degreased. For this purpose, chlorine-containing detergents shall be avoided, as they can lead to corrosion problems.

2.5.2 Cleaning

The cleaning procedure must be compatible with the corresponding coating material.

2.5.2.1 Pickling

An acidic pickling solution must be applied uniformly to all surfaces to be treated. After application, the detergent must be left to act on the material surface for the reaction time specified by the manufacturer, which is usually 20 – 30 minutes. Then the surface must be washed thoroughly with fresh water, until the pH value of the washing water corresponds to that of the fresh water.

2.5.2.2 Grit blasting

Only ferrite-free special fused alumina shall be used as the blasting agent. Blasting agents which have already been used for metals other than aluminum shall be avoided, owing to the risk of pitting corrosion. The surface roughness R_Z should lie between 25 and 50 µm. The prepared surfaces should be thoroughly freed from dust and coated as soon as possible, since the newly formed oxide layer tends to generate a porous hydrous covering layer under the influence of the weather.

2.5.2.3 Mechanical grinding

Mechanical grinding is limited to smaller areas at which coating damage has to be remedied or where, because of the local conditions, no blasting or pickling can be performed. A coarse-grained grinding disc should be used, in order to achieve a suitable surface condition in accordance with the specifications of the coating manufacturer. The blasting should extend at least 25 mm into the adjacent coated surfaces.

3. Selection of the Coating Materials

3.1 Shop primers

The requirements for shop primers in respect of corrosion protection are set out in the Rules for Classification and Construction, Part A.2.

The shop primers used particularly in shipbuilding (for **TL** class) shall be of a type approved by **TL.** See, Chapter 3, Welding.

3.2 Corrosion protection systems

Coating materials and coating systems shall be selected and applied according to the prevailing environmental and application-related conditions. Suitable coating systems for the use in seawater ballast tanks, cargo tanks on bulk carriers and for the outer shell of steel

ships are set out in Table 22.6. Their suitability shall in each case be guaranteed by the coating manufacturer, and evidence thereof shall be provided on request. The most important data of a coating material shall be documented according to STG Guideline No. 2216.

For the selection, the applicable statutory conditions and technical rules concerning work, fire and environmental protection shall be observed by the user.

The selection of a coating system for a certain case should preferably be based on practical experience with similar cases. Coating systems which are subject to strong dynamic or elongation stresses, as can occur particularly on ships of higher-strength fine-grained structural steels, or which have to withstand high temperature stresses, shall be especially suitable for withstanding such stresses.

In addition to the necessary practical tests, the corrosion protection effectiveness of coatings can be assessed on the basis of tests performed as per ISO 12944-6. Moreover, in the case of underwater coatings the compatibility with the cathodic corrosion protection procedure as per STG Guideline No. 2220 or an equivalent procedure should be verified.

Figure 22.1 shows two typical coating systems for aluminum structures.

3.3 Special coatings

3.3.1 General

The coatings and coating materials mentioned in this section go beyond the scope of normal coating systems for corrosion protection. With regard to application method, application case or suitability, they can only be used in a very specialized manner or only for certain areas.

3.3.2 Soft coatings

These solvent-free coating materials are based on wool fats, greases, mineral oils and/or waxes. They are used for corrosion protection coatings, for example in water ballast tanks, by spraying in film thicknesses up to 2 mm. Because in such areas it is often only possible to remove the loose rust, these types are especially suitable for cases of repair. However, where strong water movements can be expected, e.g. owing to the size of the tank (fore peak), other coatings should be given preference.

Since they do not contain any solvents, these coatings can be exposed to water immediately after their application. The disadvantage of these products is that the coatings remain relatively soft. To permit a proper walk-in inspection, all the necessary measures and safety precautions shall be taken. When flooding and freeing the tanks, it shall be ensured that no constituents of the soft coating pass out of the ship into the sea.

Soft coatings are not approved for ballast water tanks in ship newbuildings, and in the case of repair they are not considered when determining the survey intervals.

3.3.3 Repair coatings

Repair coatings are understood as being coatings which are preferred for the repair/renewal of the internal protection, e.g. of seawater ballast tanks on older ships. They are semi-hard coatings with a strong inhibiting effect. It should be possible to achieve a surface preparation which suffices for the application e.g. through pressurized water blasting based on STG Guideline No. 2222 or by mechanical surface preparation with cleaning.

Such coatings shall be examined by **TL** with regard to their special suitability for the case in question. Following a successful practical test of such a system, a product approval is issued. When repair coatings with a product approval are used in areas of interest for the class, e.g. in the ballast water tanks, the **TL** Rules shall be observed in addition.

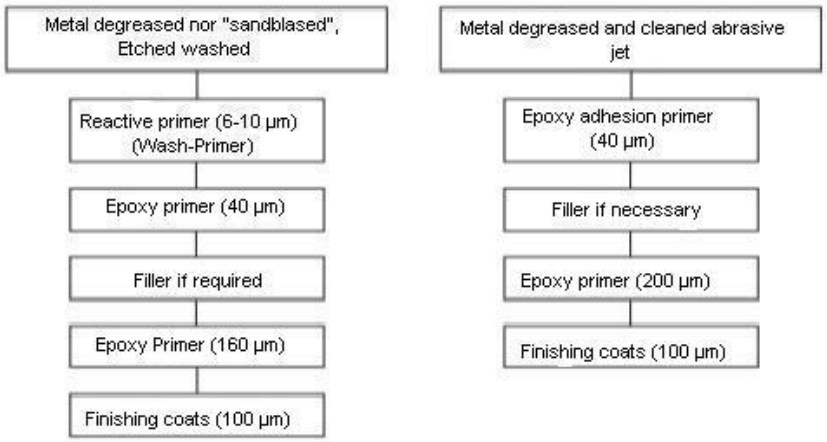

Figure 22.1 Typical coating systems for aluminum structures

Table 22.6 Examples of suitable coating systems

Areas	Type of binder	Standard preparation grade (before coating)	Minimum film thickness [µm]			Remarks
			Undercoat	Topcoat	Total dry film thickness	
Underwater shell plating / see water ballast tanks	Epoxy (resin) (EP)	Sa2 ½	1x500		500	Solvent-free, ice-going ships
		PSa2 ½	1x125	1x125	250	
	Epoxy (resin) tar combination (TE)	PSa2 ½	1-2x125	1x125	250-375	
			1x300		300	solvent - free
	Polyurethane (PUR)		2x100	1x100	300	
	Polyurethane tar combination (PUR-T)		1x125	1x125	250	
	Polyvinylchloride (PVC)		3x100		300	
	Polyvinylchloride tar combination (PVC-T)		2x100	1x100	300	
	Chlorinated rubber (RUC)		2x90	1x90	270	
	Tar (T)	PSa2 ½ St3	1x125	1x125	250	
Shell plating above water	Acryl (resin) (AY)	PSa2	3x40	1x40	160	First undercoat with anticorrosive pigment
		PSa2 ½	1x60 (Zinksilikat) +1 x 30 (Sperrgrund) +1 x 40	1x40	170	Increased corrosion protection
	Acryl (resin) (AY)	PSa2	2x60	1x40	160	
	EP	St3 / PSa2 ½	2x40	2x40	160	
			1x100	1x40	140	
	Epoxy (resin) ester (EPE)	Si2	1x90	2x40	170	
	PUR	PSa2 ½	1x100	2x40	180	
	PVC		1x100	2x40	180	
	RUC		1x80	2x40	160	
Cargo holds dry (bulk cargo)	EP	St3	1x150		150	
	PUR		1x100	1x100	200	
The complete list is given in STG Guideline No. 2215.						

3.3.4 Fiber-reinforced plastics (FRP)

Solvent-free plastics which are reinforced with glass flakes, fibers, mats, fabrics and fleeces and made on the basis of unsaturated polyester (UP), epoxy resin (EP) and polyurethane (PUR) provide very abrasion-resistant high-build coatings of high density. Application is by spraying or using a spatula and inserting glass mats, fabrics or fleeces. Depending on the stress to be withstood, the number and thickness of insert layers can vary. The film thickness of the coatings can range up to several millimeters.

For the surface preparation, grit-blasting with the surface quality grade "Sa 2½" is required. Shop primers are not suitable as the substrate.

The special areas which are coated with these systems include e.g. the alternating submersion zones of offshore structures as well as the protective shields of electrical corrosion protection equipment or hull parts of ice-going ships.

3.3.5 Deck coverings

Deck coverings in the sense of these Guidelines are coatings which are distinguished by very good corrosion protection as well as a high abrasion resistance and anti-skid effect. They are mainly applied to the strongly frequented work surfaces in outside areas. The coatings have a total dry film thickness of 2 – 20 mm. The binding agent is based on solvent-free polyurethane (PUR), epoxy resin (EP), acrylic resin (AY) or polymethylmethacrylate (PMMA).

The surface preparation shall be undertaken by grit-blasting to surface quality grade "Sa 2½". To protect the grit-blasted steel and to improve the adhesion of the coatings, a primer shall be applied. The heavily loaded coating material is applied in one or more layers, mainly by using a spatula. The anti-skid effect of the coating is achieved by scattering or working mineral materials of varying grain sizes and shapes into the wet layer.

At a concluding step, the surface is sealed.

To a certain degree, specially modified asphalt/bitumen combinations are also used as deck coverings. In film thicknesses ranging between 25 and 50 mm, the coverings are armored with expanded metal or gratings to improve the load-bearing capacity. Such coverings offer good corrosion protection, but exhibit the disadvantages of having thermoplastic properties and excessive weight.

3.3.6 Linings

Organic linings for cargo tank systems of product carriers shall be in accordance with DIN EN 14879-4.

The design of metal components shall be in accordance with DIN EN 14879-1 or DIN 2874, respectively.

Linings with laminates of hard or soft rubber are used for the cargo tanks of product tankers for special cargoes, such as phosphoric acid. The surface shall be prepared by abrasive-blasting to surface quality grade "Sa 2½". This is followed by the application of a special primer for the temporary protection of the steel surface. After the preparation work in the tank has been completed, the lining is applied under a controlled climate by bonding and welding the laminate strips. The self-vulcanization of the linings occurs, depending on the type of rubber, within a few weeks or months at temperatures of 20 – 250 °C.

The fittings, valves and piping belonging to the cargo loading/unloading system are vulcanized at the work-shop in closed autoclaves under pressure and at increased temperatures.

Furthermore, there are also solvent-free rubber-modified urethane coatings which are applied with special high-pressure spraying equipment in thicknesses of 1 – 5 mm.

4. Approval of Coatings

For all coating systems, it is possible to apply to **TL** for an approval. Here it is necessary to provide sufficient evidence to **TL** that the coating material is suitable for the intended purpose. A written application must be submitted to **TL**. After successful examination of the product datasheets, coating specifications and suitability documentation appended to the application, e.g. references and relevant test results etc., a certificate is issued by **TL**.

Coating materials for seawater ballast tanks as per the **TL** Rules must be approved.

F. Application of Coating Systems

1. General Requirements

- Before coating work commences, all surfaces shall be kept dust-free.

- Any scaffolding or stages which may be necessary must, as far as possible, be arranged so that the surfaces to be coated can be processed continuously (e.g. free-standing scaffold). If heating units are used, the exhaust fumes of the power generators shall be vented to the outside air. They shall not be allowed to mix with the heating air and precipitate on the surfaces to be coated.

- Unless otherwise agreed, the coating work shall commence on the prepared surfaces within four hours of the abrasive-blasting or mechanical grinding.

- The corresponding drying or curing times between the individual layers must comply with the manufacturer's instructions, with due consideration of the environmental conditions.

- During the application of the various layers, all critical areas – such as edges, corners, welds, brackets, bolts and nuts – must be stripe-coated, in order to ensure compliance with the minimum film thickness and a proper sequence of layers.

- The maximum thickness should, if not otherwise stated by the paint manufacturer, not be higher than three times the nominal thickness.

- The surface temperature should be less than 30 °C, but at least 3 °C above dewpoint, and the air temperature should, unless otherwise permitted by the coating manufacturer, be higher than 5 °C.

- The relative atmospheric humidity shall attain a maximum of 90% for systems on epoxy resin basis and a maximum of 95% for moisture-curing polyurethane systems. In practice, the following rule has proven its worth:

  - If surface temperature and dewpoint are not measured at prescribed intervals, application shall only take place up to a relative atmospheric humidity of maximum 85%; if both parameters are measured at intervals to be laid down, application may also take place at a higher relative atmospheric humidity.

  - The first measurement shall be carried out before application commences. The intervals for further measurements shall be varied depending on the climatic conditions and their changes.

- No coating should be applied if a change of weather is to be expected such that the specified environmental parameters cannot be complied with over the next 2 hours after completion of the coating work.

- As a matter of principle, the requirements as per ISO 12944-7 should also be observed for this area.

2. Spraying

Each layer shall be applied to the entire surface so that a uniform and closed coating is achieved. Defects in the coating which impair the corrosion protection effect shall be repaired before the next layer is applied.

3. Painting with Brush or Roller

At points where, because of the local conditions, no spraying is possible, the coating shall be applied by a brush or roller. The tool and the coating material (for roller application) shall be suitable for the intended purpose.

4. Storage of Coating Materials

If no other requirements are stipulated by the manufacturer of the coating materials, storage

temperatures between 5 and 30 °C shall be observed for the materials. The materials shall not be stored for longer than the manufacturer's instructions.

5. Approval of Coating Shops

Coating shops can receive **TL** approval. As a prerequisite, the coating shop must ensure, through personnel with suitable training and equipment that is in good working condition, that the demands set for the processing of the coating materials are satisfied. An existing quality management system with defined working sequences and the envisaged company-internal quality checks shall be verified. The examination of the conditions existing on site, with a positive result, must be viewed as a fundamental requirement. This examination must be carried out before work starts; spot checks should also be made during the application process, to confirm the initial conditions. If all requirements are met and if the examinations yield a positive result, a certificate is issued by **TL**.

6. Repair of Damage and Defects in Coating Systems during Construction

6.1 General

A classification of coating damage can take place according to STG-Guideline No. 2221, for example. The repair work shall always be suitable for the coating system intended for the corresponding area, including the surface preparation.

6.2 Insufficient film thickness

Surfaces at which the film thickness is insufficient shall be cleaned thoroughly and, if necessary, sanded down. Then a compatible coating shall be applied until the required film thickness is attained. The transitions to the original coating shall be gradual.

6.3 Contaminated surfaces

Contaminated surfaces which are to be coated further, should be prepared anew as per E.2.

6.4 Coating damage without exposed metal surface

The affected areas of the surface shall first be cleaned and degreased as per E.2. In addition, it is necessary to attain smooth transitions by sanding the edge zones, in order to achieve as uniform a surface as possible. Many two-component coatings have a retouching interval. For this reason, if this interval has elapsed, additional edge zones must be sanded or roughened in the intact area, to achieve perfect adhesion in the transition zone.

6.5 Coating damage with exposed metal surface

The conditions of the material or the systems in respect of surface preparation, the application data for each individual layer etc. shall be observed as per specification. For the adjacent coating areas, the required procedure is set out in 6.4.

G. Testing, Acceptance and Documentation of the Coating Systems

1. Testing

The surface preparation of a component or a structure should be checked as follows before the coating work commences:

- Check of the required roughness profile (visual inspection or contact stylus method).

- Testing for soluble salts and other non-visible impurities (see ISO 8502) for high-quality coating systems, e.g. for cargo tanks and seawater ballast tanks.

Within the scope of the application process, each individual coating that is applied, and subsequently the entire coating system, shall be tested as follows:

- Visual inspection for uniformity, color, covering power, curing and possible defects (e.g. cracks, flaking, craters etc.).

- Coating thickness measurement for compliance with the required target film thickness or minimum film thickness.

- Coating systems for cargo tanks of chemical and product tankers shall be tested additionally with low-voltage or high-voltage units to ensure that they are free of pores.

- In special cases, a test of adhesive strength (see ISO 2409 or ISO 4624) is also possible.

- There is the possibility, that control areas as per ISO 12944-7 will be provided at the object in question.

- The scope, number and position of these control areas shall be agreed upon by the parties involved before the coating work commences.

2. Acceptance and Documentation

For the acceptance of the prepared surfaces and coating systems in all outside areas, water-containing tanks and cargo spaces, the applicator shall invite representatives of not only the shipyard but also of the coating material supplier and the ship owner to attend. In case of seawater ballast tanks and for **IWS** ships also the underwater part of the ship's outer shell, an acceptance inspection has to be carried out by the **TL** Surveyor.

The applicator shall compile the documentation and shall deliver this to the shipyard and, if applicable, to the other participants. The documentation shall provide evidence of the checks and acceptance tests as well as the conditions prevailing during the processing, including data on the coating materials which were used.

H. Metallic Coatings on Steel

1. Hot Galvanizing

Metallic coatings by hot galvanizing shall comply with the requirements set out in ISO 1461. Hot-galvanized components should always be protected additionally by a coating (duplex coating).

2. Thermal Spraying

2.1 Surface preparation and application conditions of the steel surfaces shall comply with the requirements set out in Section E.2. Further notes and recommendations are given in EN 13507 "Pretreatment of surfaces for thermal spraying".

With regard to the application conditions, the following points shall be observed:

- The interval between preparation and spraying shall be selected so that the surface to be coated remains clean and dry and does not visibly oxidize. This interval should be less than 4 hours.

- The steel temperature shall lie at least 3 °C above dew point.

2.2 Materials for metallic coatings

As suitable materials for metal spraying;

- Aluminum: Al99.5 and

- Al-Mg alloy: AlMg5

as per ISO 14919 or an equivalent quality grade can be considered.

The following information shall be available with regard to the filler metal that is used:

- Material datasheet

- Material test certificate

- Manufacturer's designation

- Standard used

- Production or batch number

- Chemical analysis

- Wire diameter

- Net weight

- Production date

3. Spraying Technique

Each layer shall be applied uniformly to the entire surface. The metallic coatings shall be applied in several crossed layers.

Equipment and units for thermal spraying shall comply with the requirements set out in EN 1395-1.

For parts which are to be welded after spraying, an area 5 – 10 cm around the welding groove shall remain uncoated.

The protective film shall adhere properly. Spraying layers shall exhibit a uniform surface appearance that is not too coarse. They shall be free from bubbles, voids, loosely adherent spray metal, discolorations, damages and uncoated spots.

Before a subsequent layer is applied, any damage that may have occurred to the previous layer shall first be repaired.

Sealing can be achieved either by a chemical transformation (through phosphatizing, reactive compacting agents etc.) or through the use of a suitable coating system which covers up the pores.

4. Minimum Film Thickness

The minimum thickness of the metallic coatings shall not be less than the values as given in Table 22.7.

Table 22.7 Minimum thickness of sprayed metallic coatings

Spraying material		Minimum film thickness [μm]	
		Without painting	With painting
Aluminium	Al99,5	200	150
AlMg alloy	AlMg5	250	200

5. Quality Assurance for Spraying

The testing of thermal spraying layers should be performed on the basis of DVS Work Sheet 2301 and 2304.

The responsible personnel should be checked according to ISO 14918.

Spraying shops in the sense of these Guidelines can apply for approval by **TL**. Through personnel with suitable training and equipment that is in good working condition, the shop must ensure that the requirements for the processing of the thermal spray materials are met. An existing quality management system with defined working sequences and the envisaged company-internal quality checks shall be verified. The examination of the conditions existing on site, with a positive result, shall be viewed as a fundamental requirement. This examination must be carried out before work starts; spot checks should also be made during the application process, to confirm the initial conditions. If all requirements are met and if the examinations yield a positive result, a certificate is issued by **TL.**

Spraying shops which produce thermally sprayed layers for improving the workpiece properties (for example, in respect of wear, corrosion, heat transmission, electrical conductivity or similar) or for reinstating the operational readiness of components as per the Rules of **TL** shall have been approved in accordance with the welding rules issued by **TL**.

I. Certification of Coating Work

There is the possibility of having the application of coating systems certificated by **TL.** The application area here is primarily the coating of cargo tanks, however the scope can also be extended to other areas, such as ballast tanks, outer shell, superstructures etc.

The procedure for such a certification is as follows:

1. Submission of an Application

The client (shipowner, shipyard, coating manufacturer, applicator etc.) must submit a written application to **TL**. The scope of the certification must be defined by stating the areas to be coated and monitored. The technical basis is provided by the coating specification. On the basis of this information, an offer is made to the

client by **TL**.

2. Elements of Certification

2.1 Comparison with the coating specification

The items described in the specification are submitted the determine all the resulting requirements and measures. The completeness of the requirement catalogue and the fulfillment of the requirements must be checked. Elements of the specification, such as instructions of the coating material supplier as well as of other sub-contractors of the shipyard, must be coordinated and harmonized.

2.2 Quality assurance of the coating manufacturer

An examination/analysis of the quality assurance system at the coating manufacturer's site must be carried out. Perusal of the relevant documents regarding the manufacturing processes and their monitoring, as well as the subsequent quality tests at the site, must be made possible. A field appointment may be necessary for this.

2.3 Acceptance of the steel structure and surface preparation

The correct structural execution must be verified Welding seams must be examined to make sure that weld reinforcements, weld toes, surface condition and welding spatter conform to the specification. The surface preparation must be performed in accordance with the specification and the standard contained therein and is checked by the surveyor for compliance with the instructions.

The decisive parameters for surface preparation – for instance, the initial and continuously monitored blasting-medium quality, blasting pressure, and environmental conditions when blasting (steel and air temperature, air humidity, dew point etc.) – must comply with the specifications, and the actual conditions encountered must be documented. In addition, the surface preparation grade achieved must be documented for all relevant surfaces and accepted by the parties involved.

2.4 Quality assurance of the applicator (personnel, equipment, procedure)

The applicator must ensure, through personnel with suitable training and equipment that is in good working condition, that the demands set for the processing of the coating materials are satisfied. An existing quality management system with defined working sequences and the envisaged company-internal quality checks shall be verified.

The examination of the conditions existing on site, with a positive result, shall be viewed as a fundamental requirement. This examination must be carried out before work starts; spot checks should also be made during the application process, to confirm the initial conditions. If necessary, unsuitable personnel or equipment must be changed, even when production is already under way.

2.5 Application conditions

The environmental conditions (such as air and steel temperature, air humidity, dew point, retouching intervals, coating thicknesses achieved, intermediate inspections etc.) must be continuously recorded and documented. The protocol and assessment of the essential data and results is performed by the responsible **TL** surveyor. Suitable measurement and documentation equipment must be available.

2.6 Trials and repair

The specified post-treatment, such as "hot curing" of the tank coating as well as the relevant final tests, e.g. the seawater test, are also documented and accepted by the **TL** surveyor, as are any retouching activities.

3. Certification

All documents concerning the "Elements of the Certification" mentioned in 2 must be submitted to **TL**. Based on the documentation which is compiled, the certification is undertaken after examination with a positive result and the relevant certificate is issued.

J. Cathodic Corrosion Protection

1. General

The design and arrangement of the cathodic protection systems shall take into account the specific requirements of the structure or the component. These protection systems must ensure the corrosion protection for the specified protection duration.

To be able to guarantee sufficient protection, the structure must be adequately polarized. The protective potentials specified in Table 22.8 shall be observed.

The cathodic protection systems must be compatible with the coating that is applied, i.e. their use must not lead to an impairment of the quality and functionality of the coating.

The ship or the structure to be protected must be sub-divided into a suitable and expedient number of cathodic protection zones (CPZs). These are surfaces of varying corrosive stress or different areas of action as a result of geometric conditions. The areas of the corresponding CPZs must be determined or estimated as precisely as possible. The necessary protective current density for a CPZ should be chosen in accordance with the recommendations of Table 22.9, and those of the corresponding protective potential in accordance with Table 22.8.

The required consumption of protective current for a CPZ (I_{CPZ}) is obtained from the product of the CPZ area (A_{CPZ}) and the corresponding protective current density (i_{CPZ}):

$$I_{CPZ} = A_{CPZ} \cdot i_{CPZ}$$

For the outer shell of ships with the Class Notation **IWS** and for seawater ballast tanks, the relevant Rules shall be observed.

Table 22.8 Protective potentials for the CPZ of various metals in seawater

Material of the structure to be protected	Range of the protective potential (Ag/AgCl/seawater)	
	Negative minimum potential	Negative maximum potential
AlMg and AlMgSi alloys	-0,80 V	-1,10 V **(1)**
Steel /cast iron		
- Aerobic conditions	-0,80 V	-1,10 V
- Anaerobic conditions	-0,80 V	-1,10 V
High tensile steels ($Rp_{0,2} \geq 700$ MPa) **(2)**	-0,80 V	-0,95 V
Stainless steels **(2) (3)**		
- Pitting resistance equivalent $\geq W_{min.}$ **(4)**	-0,30 V	-1,05 V
- Pitting resistance equivalent $< W_{min.}$ **(4)**	-0,60 V	1,05 V

(1) *A possible cancellation through over-protection and also the risk of hydrogen embrittlement with higher-strength alloys must be considered.*
(2) *With steel types that are sensitive to hydrogen embrittlement and crack initation and with duplex steels which exhibit an unfavourable grain structure (e.g. because of incorrect application of heat), a protective potential of no less than -0.83 V must be maintained.*
(3) *Martensitic steels tempered for high strength (Rm > 1 000 MPa) should have a protective potential between -0,50 and -0,70 V.*
(4) *See Section 3.4.2.1.1*

2. External Protection with Sacrificial Anodes

2.1 Field of application

This section applies for the cathodic corrosion protection of the underwater surfaces of ships and floating units through sacrificial (galvanic) anodes (also termed "anodes" in the following) in seawater.

2.2 Design fundamentals

The protection period should be designed for one dry-docking interval, but at least for 2 years.

Table 22.9 Protective current densities for various cathodic protection zones

Typical CPZ			Protective current density (i_s) (minimum value) [mA/m^2]
Coated out shell **(1)** of steel ships with speeds	up to 20 kn		15
	25 – 25 kn		30
	over 25 kn		40
Coated outer shell of steel ships used for voyages in ice			60 **(2)**
Outer shell of ships made of aluminium alloys	Coated		4
	Uncoated		20
Outer shell of ships made of stainless steel	Coated		2
	Uncoated		20
Other uncoated underwater surfaces			200
Propeller surfaces			≥ 500
Trim, ballast water, slop and sludge tanks or similar	Coated surfaces		10
	Uncoated surfaces		120
Tank tops (inner bottoms), bilges or similar			20- 100 (depending on loading, coating and accessibility)
Underwater zone of stationary steel structures (depending on the environmental conditions)	Uncoated	DTZ	80 – 130
		WTZ	Current density of the uncoated sustained submersion zone + 20%
	Coated	DTZ	1-2% of the uncoated sustained submersion zone +1-1,5% per year
		WTZ	2-5% of the uncoated sustained submersion zone +1-1,5% per year

(1) *For service in primarily tropical waters, higher protective current densities can become necessary.*
(2) *In the case that **TL** approved ice-coatings have been applied, the protective current density can be reduced to 40 mA/m^2.*

2.2.1 Protective current density

Reference values for the required protective current densities are given in Table 22.9. Protective current densities for non-specific areas or for CPZs which represent special areas from a corrosion protection viewpoint (bow thrusters, water-jet drives etc.) shall be determined individually in each case. The calculated underwater area applies only for the hull; for the determination of the overall area AG to be protected, the additional cathodic protection zones (such as the appendages, propeller and shafts) are calculated separately according to drawings and then added.

The protection of openings, e.g. sea chests, and other CPZs lying outside the region of action must be calculated in addition (For cathodic protection of sea chests, see Section 8 B 3.6.4.4).

2.2.2 Calculation of the protective current

The required total protective current is:

$$I_G = A_G \cdot i_S$$

where:

I_G = Total protective current,

A_G = Total area to be protected,

i_S = Protective current density.

The protective current for cathodic protection zones to be handled separately must be determined by;

$$I_{CPZ} = A_{CPZ} \cdot i_{CPZ}$$

2.2.3 Calculation of the required anode weight

The required total anode weight is:

$$m_G = \frac{I_G \cdot t_S}{Q_g}$$

where:

m_G = Required total anode weight,

I_G = Total protective current,

t_S = Protective period,

Q_g = Electrochemical efficiency of the anode alloy.

The required anode weight of a CPZ to be handled separately is:

$$m_{CPZ} = \frac{I_{CPZ} \cdot t_S}{Q_g}$$

If an area which has to be considered separately, such as a bow thruster, consists of several cathodic protection zones (impeller, bracket, tunnel), the required total mass must be calculated by addition of the individual values.

2.3 Anode selection

2.3.1 Anode materials

Concerning the materials for galvanic anodes, aluminum or zinc alloys as per the requirements set out in Table 22.10 or Table 22.11 or as per VG 81257, equivalent standards or specifications approved by **TL** must be applied.

Table 22.10 Sacrificial anodes of zinc alloys for seawater applications.

Element	TL-Zn1	TL-Zn2
Al	0,10 - 0,50	≤ 0,10
Cd	0,025 - 0,07	≤ 0,004
Cu	≤ 0,005	≤ 0,005
Fe	≤ 0,005	≤ 0,0014
Pb	≤ 0,006	≤ 0,006
Zn	≥ 99,22	≥ 99,88
Potential (T=20ºC)	-1,03V Ag/AgCl/Sea	-1,03V Ag/AgCl/Sea
Q_g (T=20ºC)	780 Ah/kg	780 Ah/kg
Efficiency (T=20ºC)	95%	

Table 22.11 Sacrificial anodes of aluminum alloys for seawater applications.

Element	TL-Al1	TL-Al2	TL-Al3
Si	≤ 0,10	≤ 0,10	Si + Fe
Fe	≤ 0,10	≤ 0,13	≤ 0,10
Cu	≤ 0,005	≤ 0,005	≤ 0,05
Mn	N/A	N/A	0,15-0,50
Zn	2,0-6,0	4,0-6,0	2,0-5,0
Ti	-	-	0,01-0,05
In	0,01-0,03	-	0,01-0,05
Sn	-	0,05-0,15	-
Other El.	≤ 0,10	≤ 0,10	≤ 0,15
Al	Remainder	Remainder	Remainder
Potential (T=20ºC)	-1,05V Ag/AgCl/Sea	-1,03V Ag/AgCl/Sea	-1,05V Ag/AgCl/Sea
Q_g (T=20ºC)	2000 Ah/kg	2000 Ah/kg	2700 Ah/kg
Efficiency (T=20ºC)	95%		

Other material combinations, as specified in Table 22.10 and Table 22.11 sacrificial anodes of aluminum alloys for applications in seawater, are only permissible for sacrificial anodes if their suitability and protective effect can be verified, either through successful and documented service over many years or through suitable testing methods.

Anodes of magnesium alloys are not permissible in ship and offshore technology, neither for cargo tanks and ballast water tanks nor for the protection of the ship's outer shell nor as a temporary protection. An exception here is presented by applications solely in fresh water.

In the case of ambient temperatures exceeding 25 °C, the reduced capacity and effectiveness of the sacrificial anodes must be taken into account for the design and arrangement. This is especially applicable to hot transverse bulkheads (e.g. walls adjoining fuel tanks). Conventional sacrificial anodes of zinc must only be used up to an ambient temperature of 50 °C for the protection of steel. If special alloys are to be used at temperatures exceeding 50 °C, their electrochemical characteristic and protective effect must be verified separately. The capacity of aluminum anodes is also reduced. In the case of high temperatures, it can be calculated as an approximation within the temperature range from T = 20 to 80 °C using the following equation:

$$Q_g(t)=2000-27\cdot(T-20\ ^0C) \quad [Ah/kg]$$

Experience shows that there are also special alloys for aluminum anodes which possess greater current capacities at high temperatures than the values calculated according to the above equation. The manufacturer must then verify and guarantee these values.

2.3.2 Anode shape and mounting

The shape and size of the anodes must be suitable for the intended purpose. For the ship's outer shell, flat anodes must be specified, to keep the flow resistance to a minimum. Applicable instructions are given in VG 81257.

Here, it must be ensured that the selected anodes provide the required protective currents and the calculated anode weight through their number and shapes.

Depending on the material to which the anodes are affixed, mountings of hull structural steel (H), stainless steel (SS), non-magnetic austenitic steel (NM) or aluminum (Al) must be used.

H **TL**–B or equivalent type of steel with regard to strength and weldability

SS X6CrNiMoTi17-12-2 (1.4571) according to DIN EN 10088-2 or equivalent type of steel with regard to strength, weldability and corrosion resistance.

NM X2CrNiMoN18-14-3 (1.3952.9) according to WL 1.3952-1 or at least equivalent type of steel with regard to strength, weldability, corrosion resistance and non-magnetic properties.

Al AlMg4,5Mn (3.3547) or other type according to EN 573 that can be agreed upon when the order is placed.

The mounting bracket of ship structural steel, zinc-plated with a thickness >25 µm, must be free of cracks and impurities. Zinc coatings are not suitable for aluminum anodes.

The mounting of stainless steel or non-magnetic steel must be pickled.

Mountings of aluminum must be free of impurities.

2.4 Arrangement of the anodes

2.4.1 Fastening the anodes

The connection between the anode and the area to be protected must be metallically conductive. For this reason, the anodes must be welded on.

In the case of low shell thicknesses, sensitive materials or platforms, mounted plates (doubling) of sufficient thickness must be welded on, with an extra border of 20 mm on all sides around the welding points of the anode. If bolted connections cannot be avoided in exceptional cases – which must be agreed upon with the client – a metallically conducting connection, e.g. through welding points, must be provided.

2.4.2 Shadow effect and openings

The anodes must be arranged so that a shadow effect is largely avoided.

Openings in the outer shell, e.g. for sea chests, lateral thrust propellers or similar, must be protected in addition. It must be taken into account that openings are protected by externally placed anodes only up to a depth of one to two times the opening diameter.

2.4.3 Anode-free areas

In order not to impair the inflow of water to the propeller, an area depending on the diameter of the propeller, according to Figure 22.2, should be kept free of anodes.

The dimensions given are reference values which depend on the shape of the hull and the speed.

Areas in which the flow conditions must not be impaired (e.g. in the vicinity of sonar domes or openings for pitot heads) must be kept free of anodes according to the corresponding instructions of the manufacturer.

In the tunnel of bow thrusters, the anodes should be arranged by agreement with the manufacturer of the thruster unit.

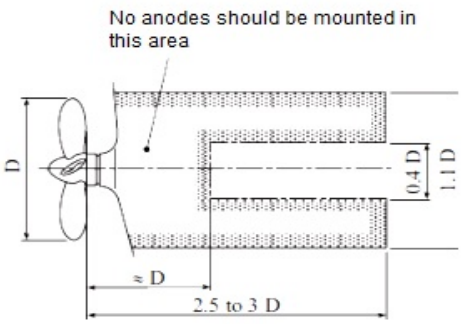

Figure 22.2 Anode-free zones in way of the propeller

2.4.4 Complete protection

The anodes required according to 2 serve to protect the entire ship and must be distributed over the entire underwater area of the vessel. For the stern area, about 25 % of the total anode weight must be used for single-propeller ships, and about 30% for multi-propeller ships; for the arrangement, see 2.4.6.

The remaining anode weight must be distributed over the midbody and the forebody of the ship.

In way of the bilge, the anodes must be arranged so that they cannot be damaged when the ship is berthed. In the case of bilge keels, the anodes must be arranged in alternation on their upper and lower sides; if the bilge keel height is not sufficient for this, the anodes must be arranged on the hull near the bilge keel in alternation above and below the bilge keel. The anodes near the bows must be arranged in the direction of water flow and placed so that they cannot be damaged by the anchor chain.

2.4.5 Stern protection

For ships where only the aftship is protected, about 25% or 30% of the total anode weight must be applied within the scope of the complete protection according to 2.4.4. With this partial protection of the ship, at least 2 anodes of the same shape, or 10% of the actual stern protection must be applied in addition. These additional anodes shall be fixed 3 to 8 m in front of the front anode of the actual stern protection. In case of the Class Notation **IW** the complete underwater hull has to be protected in any case.

2.4.6 Anode arrangement at the stern

When determining the anode arrangement in the stern area, the local flow conditions must be considered and the following points must be taken into account:

- Above the propeller well and the heel piece just before the propeller well, at least one anode must be mounted on each side.

- In way of the stern tube exit, the necessary anodes must be arranged (at least one on each side), whereby special attention must be paid to the anode-free area according to 2.4.3 and Figure 22.2

- To protect the shaft brackets, anodes must be applied near their mountings on both sides of the hull. The size and material of the shaft brackets must be taken into account for the number of anodes.

- As a rule, propellers and shafts should be included in the cathodic corrosion protection of the outer shell. These parts must be connected conductively with the hull by means of sliprings on the propeller shafts and brushes. To achieve a low-impedance connection, the split bronze or copper ring must have a rolled-in silver layer, on which the brushes of metallic graphite run. The transfer voltages should lie under 40 mV. For monitoring purposes, a measuring instrument must be installed permanently via a separate carbon brush.

- It is possible to cathodically protect the propeller and shaft solely through a zinc ring mounted on the propeller hub or on the shaft.

- The rudders of fast ships (speeds over 30 knot) should as a rule only be protected by anodes

adapted to the rudder profile, e.g. shape RA according to VG 81257. If this is not possible, the rudder must be included in the complete protection scheme by cable or copper-band connections to the hull.

- Rudder heels must be given one anode on either side. The width of the anode should be smaller than the height of the rudder heel.

2.4.7 Special aspects

2.4.7.1 Metal ships with special features

For ships with special propulsion systems (e.g. Voith-Schneider drive) and for ships with special rudder shapes (e.g. Kort nozzle or rudder propellers), certain measures that must be agreed upon with the corresponding manufacturer and **TL** are necessary.

For special hull types (e.g. hydrofoils, ships with water-jet drives, catamarans), the structural design and the flow rate must be considered for the arrangement of the external protection.

2.4.7.2 Ships with a non-metallic hull

For the protection of the metallic appendages, anodes applied to the hull must be conductively connected (using either welding straps or cables) with the parts to be protected, whereby in each case care must be taken to ensure a metallically conducting connection.

If there is no central cathodic protection system, rudders must be cathodically protected by anodes, and propellers and shafts by zinc rings affixed to the propeller hubs or shafts.

3. Internal Protection with Sacrificial Anodes

3.1 Field of application

This section applies for the cathodic corrosion protection of the internal areas of ships and floating units by means of sacrificial anodes. The specification applies only for surfaces which have been exposed to an electrolytic solution of sufficient conductivity – at least brackish water – for a sufficient length of time – at least 50% of the service time. The effect of the anodes is limited in fresh water and river water.

3.2 Design fundamentals

3.2.1 Protective current requirement

3.2.1.1 Protective current density

Reference values for the required protective current densities are given in Table 22.9.

3.2.1.2 Protection period

The protection period should be set to 5 years or defined by agreement with the client.

3.2.1.3 Loading factor

The size of the loading factor (f_B) depends on the period in which the surface is covered with the electrolytic solution.

In the case of constant loading (filled tanks/cells), the factor must be set to 1.

3.2.1.4 Total area to be protected

The maximum surface area covered by the electrolytic solution is used for the calculation.

3.2.2 Anode weight

The required anode weight per CPZ is obtained by

$$m_{CPZ} = \frac{I_{CPZ} \cdot t_S \cdot f_B}{Q_g}$$

f_B = Loading factor

4. External Protection with Impressed Current (ICCP)

4.1 Field of application

This section applies for the cathodic corrosion protection of the underwater surfaces of ships and floating units through impressed current in seawater and brackish water.

4.2 Design fundamentals

The same design fundamentals apply as set out in J.2.2. Openings in the outer shell – e.g. sea chests, overboard discharges, stabilizer boxes, thrusters, scoops, parts not conductively linked, Voith-Schneider propellers, shaft penetrations, and other cathodic protection zones which lie outside of the zone of action – must be protected additionally with sacrificial anodes.

4.3 Arrangement of anodes and reference electrodes

The impressed-current cathodic protection system is designed for a specific ship or structure. In general, the following design criteria must be observed:

- The impressed-current system must be symmetrical, i.e. for the port and starboard sides, the same number of impressed-current anodes and reference electrodes must be arranged at the same positions. Damage to the ship must be expected for an asymmetrical arrangement.

- At least one anode each must be arranged to port and to starboard in the stern area of the ship – preferably in way of the engine room.

- At both sides, at least one reference electrode must be arranged for either side; this electrode must be located between the anode and the propeller and be as far away as possible from the associated anode (minimum distance approx. 10 % of the ship's length).

- Vessels with a length (L_{BP}) of more than 175 m shall be equipped with a second impressed-current system in the bow area.

- If there are two impressed-current systems, the system for the bow area must be arranged so that the control electrode is located between the anode and the bow.

- The structural inclusion (cofferdam) of the anodes in the outer shell must be carried out in a technically competent manner. In case of ships with **TL** Class, this is object of the drawing examination.

- The anodes exhibit a relatively high current delivery which could lead to damage to the coating if no suitable counter measures are taken. For this reason, a protective shield of adequate coating thickness and size must be built up around the anodes to ensure a favorable distribution of current.

- At a distance of at least 0.8 m from the anode edge, an FRP coating or a filler compound or an equivalent coating with a dry film thickness of at least 3 mm at the anode and 2 mm at the outer border of this area shall be applied. For the remaining area of the protective shield, a coating with a dry film thickness (without antifouling) of at least 500 µm can be used.

- The protective shields of GRP coatings, filler compounds and/or coating systems must be resistant to the loads occurring in the "potential funnels" (e.g. elementary chlorine), must not become brittle, must exhibit adequate ductility and must not change even after lengthy docking periods.

- The protective shields must have a target lifetime of 10 years.

- The rudder must be included in the cathodic protection scheme with an appropriate cable connection, and the propeller with a shaft slipring

- The capacity of the rectifier must be designed so that the required protective current requirement is ensured in all cases and so that a reserve capacity at least 1.5 times of the normal service value is available to accommodate the coating damage which is to be expected. In Figure 22.3, Figure 22.4 and Figure 22.5 the impressed-current protection for a ship is shown in schematic form.

4.4 Monitoring and control

4.4.1 Impressed-current protection systems must be fitted with voltage-controlling power supply units which may exhibit a slow control characteristic. It must be possible to read the control electrodes individually, so that the protective current can be adjusted independent for port and starboard side.

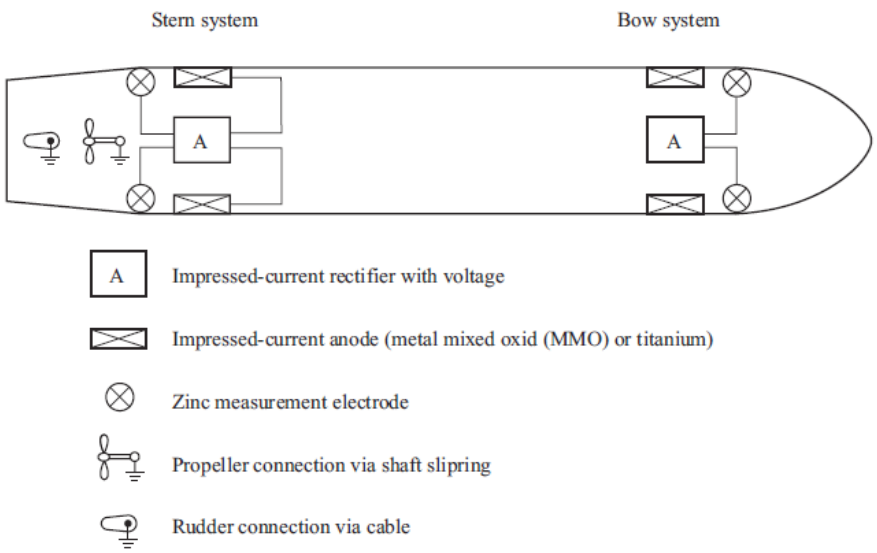

Figure 22.3 Schematic arrangement of impressed-current cathodic protection system

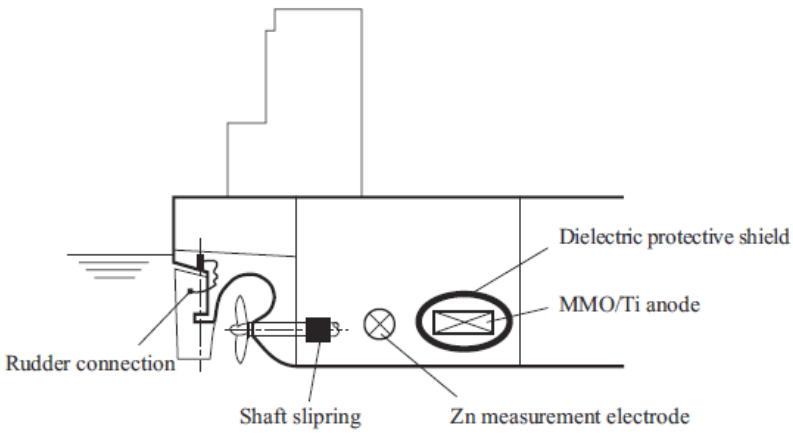

Figure 22.4 Schematic arrangement of an impressed current system (stern area)

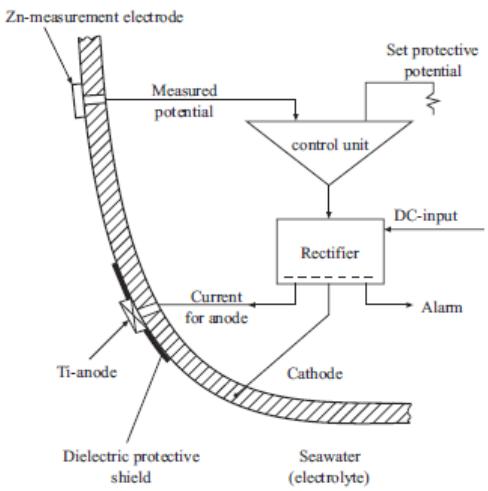

Figure 22.5 Schematic circuit diagram for an ICCP system

4.4.2 The possibility of switching over from automatic to manual operation must be provided.

4.4.3 The following indicators must be provided as a minimum:

- Indicator light "On"
- Indicator light "Manual Operation"
- Common indicator light "Malfunction"
- Indicator "Anode failure or anode group failure" Measurement units for "Anode current", "Anode voltage" and "Potential" (input impedance of the measurement circuit: ≥ 1MΩ)

4.4.4 The target-value transmitter for setting the required potential must be fitted with a locking arrangement.

4.4.5 Automatic limiters for anode current and anode voltage must be provided.

4.4.6 In the event of wire break or short-circuit at the control electrodes, the protective current must be switched off automatically or regulated down to zero when in automatic mode.

4.4.7 For alerting purposes, each group alarm must be routed via a potential-free contact (change-over) to the terminal strip of the power supply unit.

4.4.8 The control precision of the set voltage for the control electrodes (target value) must be within ± 10 mV during automatic operation.

4.4.9 The measurement units must be arranged so that it is easy to read off the measurement values regularly

4.4.10 The potential values, the voltage difference at the shaft slipring and, if applicable, the anode current and anode voltage must be recorded at regular intervals.

5. Maintenance of the Cathodic Protection System

During docking periods, the sacrificial anodes must be checked for excessive metal loss, damage and possible passivation, and also for uniformity of the metal loss. Furthermore, the mountings of the sacrificial anodes must be checked for proper electrical contact. In the case of impressed-current systems, the condition of the reference electrodes, the impressed-current anodes and the anodic protective shield must be checked for damage.

During abrasive-blasting and high-pressure washing work at the outer shell, the reference electrodes, the impressed-current anodes and the anodic protective shields must be protected against damage.

The voltage difference between the slipring of the propeller shaft and the brushes must not exceed 40 mV, in order to prevent damage to the propeller bearings and the propeller shaft. Any instructions issued by the manufacturer must be observed.

6. Documentation of the Cathodic Protection System

The installed cathodic corrosion protection system must be described by appropriate documentation and can be presented to **TL** for examination. In the case of ships with the Class of **TL** that are to bear the Class Notation **IWS**, the following documents shall be submitted. The documentation must, in so far applicable, cover the following points:

- Design data of the system (selected protective current densities and potential ranges for specific areas for the ship, for each CPZ).
- Arrangement of the sacrificial anodes on the ship.
- Specification of the sacrificial anodes, i.e. type or chemical composition, mass, capacity, manufacturer, acceptance certificate.
- Type and arrangement of the reference electrodes and the impressed-current anodes as well as the rudder and propeller connections.

- Type and design data of the rectifier.
- Specification of the anodic protective shield.
- Specification of the control unit,
- Design of the cofferdams.

K. Standards

1. Normative References

ISO 1461 Hot dip galvanized coatings on fabricated iron and steel articles – Specifications and test methods.

ISO 8501 Preparation of steel substrates before application of paints and related products - Visual assessment of surface cleanliness.

ISO 11124 Preparation of steel substrates before application of paints and related products - Specifications for metallic blast cleaning abrasives.

ISO 11126 Preparation of steel substrates before application of paints and related products - Specifications for non-metallic blast-cleaning abrasives.

ISO 12944 Paints and varnishes-Corrosion protection of steel structures by protective paint systems.

ISO 14918 Thermal spraying - Approval testing of thermal sprayers.

ISO 14919 Thermal spraying - Wires, rods and cords for flame and arc spraying.

EN ISO 4618 Paints and varnishes - Terms and definitions.

EN 1395-1 Thermal spraying - Acceptance inspection of thermal spraying equipment - General requirements

EN 12473 General principles of cathodic protection in seawater.

EN 12474 Cathodic protection for submarine pipelines.

EN 12495 Cathodic protection for fixed steel offshore structures.

EN 13173 Cathodic protection for steel offshore floating structures.

EN 13174 Cathodic protection for harbor installations.

EN 13507 Thermal spraying - Pre-treatment of surfaces of metallic parts and components for thermal spraying.

EN 13509 Cathodic protection measurement techniques.

DIN EN ISO 2063 Metallic and other inorganic coatings - Thermal spraying - Zinc, aluminum and their alloys.

VG 81257 Cathodic protection of ships - Galvanic anodes – Dimensions, masses, characteristic values and materials.

VG 81256 Cathodic protection of ships, external protection by galvanic anodes.

VG 81258 Cathodic protection of ships, internal protection by galvanic anodes.

VG 81259 Cathodic protection of ships, external protection by impressed current.

DIN 50900 Corrosion of metals – Terms.

DIN 50927 Planning and application of the electrochemical corrosion protection... (internal protection).

DIN 50929 Probability of corrosion of metallic materials when subject to corrosion from the outside.

DIN EN 12502 Protection of metallic materials against corrosion guidance on the assessment of corrosion likelihood in water distribution and storage systems.

DIN 81249 Corrosion of metals in seawater and sea Atmosphere.

NORSOK Standard M-503–Cathodic protection.

NORSOK Standard M-501 – Surface preparation and protective coatings.

IACS Shipbuilding and Repair Quality Standard.

SEW 390 Non-magnetisable steels.

SEW 395 Non-magnetisable steel castings.

2. Guidelines of the Society of Naval Architects and Marine Engineers (STG)

STG 2215 Corrosion protection for ships and offshore structures, Part 1 ".newbuildings".

STG 2216 STG-Data sheet for coating materials.

STG 2220 Testing and assessment of the suitability of coatings for immersed service for ships and offshore structures with cathodic protection systems.

STG 2221 Corrosion protection for ships and offshore structures, Part 1 "...maintenance".

STG 2222 Preparation grades for high-pressure water cleaning.

3. DVS Work Sheets

DVS 2301 Guideline for thermal spraying of metallic and non-metallic materials.

DVS 2304 Quality ensurance during thermal spraying.

SECTION 23

BOW, STERN AND SIDE DOORS

A. Introduction

1. General

1.1 In this section requirements for bow, stern and side shell doors are given.

1.2 The ship's side shall not have any openings between the embarkation station of the marine evacuation system and the waterline in the lightest seagoing condition and means shall be provided to protect the system from any projections.

No openings, be they permanent openings, recessed promenades or temporary openings such as shell doors, windows or ports, are allowed in this particular area.

1.3 For ro-ro passenger ships subject to the provisions of subparagraphs SOLAS Reg. II-1/17-1 items 1.2 and 1.3, all accesses that lead to spaces below the bulkhead deck shall have a lowest point which is not less than 2.5 m above the bulkhead deck. **(1)**

2. Definitions

2.1 **Securing device** is a device used to keep the door closed by preventing it from rotating about its hinges.

2.2 **Supporting device** is a device used to transmit external or internal loads from the door to a securing device and from the securing device to the ship's structure, or a device other than a securing device, such as a hinge, stopper or other fixed device, that transmits loads from the door to the ship's structure.

2.3 **Locking device** is a device that locks a securing device in the closed position.

2.4 **Definition of Symbols**

a = Vertical distance [m] from visor pivot to the centroid of the transverse, vertical projected area A_X of the visor door,

A = Area of door opening [m^2],

A_X = Area of the transverse vertical projection of the door [m^2],

A_Y = Area of the longitudinal vertical projection of the door [m^2],

A_Z = Area of the horizontal projection of the door [m^2],

A_W = Sectional area of stiffener webs [m^2],

b = Horizontal distance [m] from visor pivot to the centroid of the horizontal projected area A_Z of visor door,

c = Horizontal distance [m] from visor pivot to the centre of gravity of visor mass,

C_{RS} = Service range coefficient according to Section 5, A.2.3,

f_1 = Coefficient of curvature of the panel, equal to:

= $1-\frac{s}{2r}$, to be taken not less than 0.75

f_2 = Coefficient of aspect ratio of the plate panel, equal to:

= $\sqrt{1.1-0.5\left(\frac{s}{\ell}\right)^2}$,to be taken not greater than 1.0

F_C = Accidental force [kN],

F_e = Design external force [kN],

F_H = Horizontal force [kN],

F_i = Design internal force [kN],

F_O = Door opening force [kN],

F_P = Total packing force [kN],

F_V = Vertical force [kN],

F_X = Longitudinal external force for bow door [kN],

F_Y = Transverse external force for bow door [kN],

(1) *Also see IACS Unified Interpretation SC220*

F_Z = Vertical external force for bow door [kN],

h = Height of the door [m],

k = Material factor according to Section 3, A,

L = Ship length [m], as defined in Section 1, H.2,

M_Y = Visor door closing moment [kNm],

P_e = Design external pressure [kN/m^2],

P_h = Hydrostatic pressure [kN/m^2],

P_i = Design internal pressure [kN/m^2],

P_{IB} = Bow impact load [kN/m^2], as defined in Section 5, E.1,

P_S = Still water pressure load on side shell [kN/m^2], as defined in Section 5, C.2,

P_{WS} = Wave pressure load on side shell, [kN/m^2], as defined in Section 5, D.2,

Q = Shear force [kN],

r = Radius of curvature [m],

R_{eH} = Minimum nominal upper yield point [N/mm^2] according to Section 3, A,

s = Spacing of stiffeners [m],

t = Plate thickness [mm],

t_K = Corrosion addition [mm], according to Section 3, B,

V = Ship speed [kn], as defined in Section 1, H.5,

W_D = Door mass [t],

Z_G = Height of centre of area of door above baseline [m],

α = Flare angle at the point to be considered,

β = Entry angle at the point to be considered,

ℓ = Unsupported span [m],

σ_b = Bending stress [N/mm^2],

σ_P = Allowable stress of the material [N/mm^2],

σ_V = Equivalent stress [N/mm^2],

τ = Shear stress [N/mm^2].

B. Bow Doors and Inner Doors

1. General

1.1 Definitions

1.1.1 Two types of bow door are covered by these requirements:

- **Visor doors** opened by rotating upwards and outwards about a horizontal axis through two or more hinges located near the top of the door and connected to the primary structure of the door by longitudinally arranged lifting arms.

- **Side-opening doors** opened either by rotating outwards about a vertical axis through two or more hinges located near the outboard edges or by horizontal translation by means of linking arms arranged with pivoted attachments to the door and the ship. It is anticipated that side opening bow doors are arranged in pairs.

Other types of bow door will be specially considered in association with the applicable requirements of these rules.

1.2 Arrangement

1.2.1 Bow doors are to be situated above the freeboard deck. A watertight recess in the freeboard deck located forward of the collision bulkhead and above the deepest waterline fitted for arrangement of ramps or other related mechanical devices, may be regarded as a part of the freeboard deck for the purpose of this requirement.

1.2.2 An inner door is to be fitted. The inner door is to be part of the collision bulkhead. The inner door

needs not be fitted directly above the collision bulkhead below, provided it is located within the limits specified in Section 11, A.4.1 for the position of the collision bulkhead. A vehicle ramp may be arranged for this purpose, provided its position complies with Section 11, A.4.1. If this is not possible, a separate inner weathertight door is to be installed, as far as practicable within the limits specified for the position of the collision bulkhead.

1.2.3 Bow doors are to be so fitted as to ensure tightness consistent with operational conditions and to give effective protection to inner doors. Inner doors forming part of the collision bulkhead are to be weather tight over the full height of the cargo space and arranged with fixed sealing supports on the aft side of the doors.

1.2.4 Bow doors and inner doors are to be so arranged as to preclude the possibility of the bow door causing structural damage to the inner door or to the collision bulkhead in the case of damage to or detachment of the bow door. If this is not possible, a separate inner weather tight door is to be installed, as indicated in 1.2.2.

1.2.5 The requirements for inner doors are based on the assumption that the vehicles are effectively lashed and secured against movement in stowed position.

2. Strength Criteria

2.1 Primary Structure and Securing and Supporting Devices

2.1.1 Scantlings of the primary members, securing and supporting devices of bow doors and inner doors are to be so designed that under the design loads defined in 3 the following stresses are not exceeded:

Bending stress: $\sigma_b = \frac{120}{k}$ [N/mm^2]

Shear stress: $\tau = \frac{80}{k}$ [N/mm^2]

Equivalent stress: $\sigma_V = \sqrt{\sigma_b^2 + 3\tau^2} = \frac{150}{k}$ [N/mm^2]

where k is the material factor as given in Section 3, A, but is not to be taken less than 0.72 unless a fatigue analysis is carried out according to Section 3, D.

2.1.2 The buckling strength of primary members is to be verified according to Section 3, C.

2.1.3 For steel to steel bearings in securing and supporting devices, the nominal bearing pressure calculated by dividing the design force by the projected bearing area is not to exceed $0.8R_{eH}$, where R_{eH} is the yield stress of the bearing material. For other bearing materials, the permissible bearing pressure is to be determined according to the manufacturer's specification.

2.1.4 The arrangement of securing and supporting devices is to be such that threaded bolts do not carry support forces. The maximum tension stress in way of thread of bolts not carrying support forces is not to exceed 125/k [N/mm^2].

3. Design Loads

3.1 Bow Doors

3.1.1 The design external pressure to be considered for the scantlings of primary members of bow doors is not to be less than the pressure specified in Section 5, and also not to be taken less than:

$$P_e = C_e\left(0.22 + 0.15\tan\alpha\right)\left(0.4V\sin\beta + 0.6\sqrt{L}\right)^2 \quad [\text{kN/m}^2]$$

$$C_e = 2.75\frac{1 + C_{RS}}{2}C_H$$

V = Ship's speed [kn] as defined in Section 1, H.5

L = Ship's length [m], L ≤ 200 m.

C_{RS} = Service range coefficient according to Section 5, A.2.2

C_H = 0.0125L for L < 80 m.

= 1.0 for L ≥ 80 m.

α = Flare angle at the point to be considered, defined as the angle between a vertical line and the tangent to the side shell plating, measured in a vertical plane normal to the horizontal tangent to the shell plating.

β = Entry angle at the point to be considered defined as the angle between a longitudinal line parallel to the centreline and the tangent to the shell plating in a horizontal plane.

See also Figure 23.1.

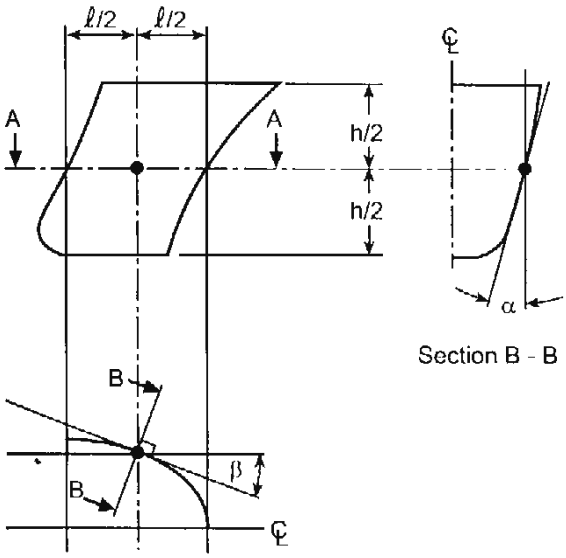

Figure 23.1 Definitions of angle α and β

3.1.2 The design external forces for determining scantlings of securing and supporting devices of bow doors are not to be less than:

$F_X = P_e A_X$ [kN]

$F_Y = P_e A_Y$ [kN]

$F_Z = P_e A_Z$ [kN]

A_X = Area [m^2] of the transverse vertical projection of the door between the levels of the bottom of the door and the upper deck or between the bottom of the door and the top of the door, whichever is the lesser.

A_Y = Area [m^2] of the longitudinal vertical projection of the door between the levels of the bottom of the door and the upper deck or between the bottom of the door and the top of the door, whichever is the lesser,

A_Z = Area [m^2] of the horizontal projection of the door between the levels of the bottom of the door and the upper deck or between the bottom of the door and the top of the door, whichever is the lesser,

for A_X, A_Y and A_Z see also Figure 23.2.

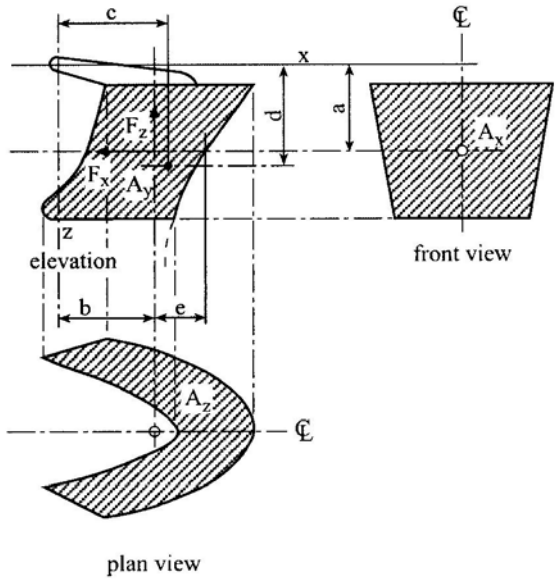

Figure 23.2 Bow door of visor type

h = Height [m] of the door between the levels of the bottom of the door and the upper deck or between the bottom of the door and the top of the door, whichever is the lesser,

ℓ = Length [m] of the door at a height h/2 above the bottom of the door,

P_e = External design pressure [kN/m^2] as given in 3.1.1 with angles α and β defined as follows:

α = Flare angle measured at the point on the bow door, ℓ/2 aft of the stem line on the plane h/2 above the bottom of the door, as shown in Figure 23.1,

β = Entry angle measured at the same point as α.

For bow doors, including bulwark, of unusual form or proportions, e.g. ships with a rounded nose and large stem angles, the areas and angles used for determination of the design values of external forces may require to be specially considered.

3.1.3 For visor doors the closing moment M_Y under external loads is to be taken as:

$M_Y = F_X a + 10 W_D c - F_Z b$ [kNm]

W_D = Mass of the visor door [t]

a = Vertical distance [m] from visor pivot to the centroid of the transverse, vertical projected area A_X of the visor door, as shown in Figure 23.2.

b = Horizontal distance [m] from visor pivot to the centroid of the horizontal projected area A_Z of visor door, as shown in Figure 23.2.

c = Horizontal distance [m] from visor pivot to the centre of gravity of visor mass, as shown in Figure 23.2.

The closing moment M_Y is to be not less than:

$$M_{Yo} = 10W_D c + 0.1\sqrt{a^2 + b^2}\sqrt{F_X^2 + F_Z^2} \quad \text{[kNm]}$$

3.1.4 Moreover, the lifting arms of a visor door and its supports are to be dimensioned for the static and dynamic forces applied during the lifting and lowering operations, and a minimum wind pressure of 1.5 kN/m^2 is to be taken into account.

3.2 Inner Doors

3.2.1 The design external pressure P_e considered for the scantlings of primary members, securing and supporting devices and surrounding structure of inner doors is to be taken as the greater of the following:

- P_e = 0.45L [kN/m^2] or
- Hydrostatic pressure P_h = 10h [kN/m^2] where h is the distance [m] from the load point to the top of the cargo space.

L = Ship's length [m], L ≤ 200 m.

3.2.2 The design internal pressure P_i considered for the scantlings of securing devices of inner doors is not to be less than 25 kN/m^2.

4. Scantlings of Bow Doors

4.1 General

4.1.1 The strength of bow doors is to be commensurate with that of the surrounding structure.

4.1.2 Bow doors are to be adequately stiffened and means are to be provided to prevent lateral or vertical movement of the doors when closed. For visor doors adequate strength for the opening and closing operations is to be provided in the connections of the lifting arms to the door structure and to the ship structure.

4.2 Plating and Secondary Stiffeners

4.2.1 The thickness of the bow door plating is not to be less than the greater of the following values but in no case less than the required minimum thickness of the shell plating according to Section 7, B.3.

$$t = 15 f_1 f_2 s\sqrt{\frac{P_S + P_{WS}}{\sigma_P}} + t_K \quad \text{[mm]}$$

$$t = 10 f_1 f_2 s\sqrt{\frac{P_{IB}}{\sigma_P}} + t_K \quad \text{[mm]}$$

s = Bow door stiffener spacing [m]

f_1 = Coefficient of curvature of the panel, equal to:

= $1 - \frac{s}{2r}$, to be taken not less than 0.75

r = Radius of curvature [m]

f_2 = Coefficient of aspect ratio of the plate panel, equal to:

= $\sqrt{1.1 - 0.5\left(\frac{s}{\ell}\right)^2}$, to be taken not greater than 1.0

P_S = Static sea pressure load on side shell [kN/m^2], as defined in Section 5, C.2.

P_{WS} = Wave pressure load on side shell, [kN/m^2], as defined in Section 5, D.2.

P_{IB} = Bow impact load [kN/m^2], as defined in Section 5, E.1

σ_P = Allowable stress, in N/mm^2, of the material

= $\frac{160}{k}$

t_K = Corrosion addition [mm], according to Section 3, B.9.

4.2.2 The section modulus of horizontal or vertical stiffeners is not to be less than that required for framing at the position of the door according to Section 8, C. Consideration is to be given, where necessary, to differences in fixity between ship's frames and bow doors stiffeners.

4.2.3 The stiffener webs are to have a net sectional area not less than:

$$A_W = \frac{Qk}{10} \qquad [cm^2]$$

Q = shear force [kN] in the stiffener calculated by using uniformly distributed external design pressure P_e as given in 3.1.1,

k = Material factor according to Section 3, A.

4.3 Primary Structure

4.3.1 The bow door secondary stiffeners are to be supported by primary members constituting the main stiffening of the door.

4.3.2 The primary members of the bow door and the hull structure in way are to have sufficient stiffness to ensure integrity of the boundary support of the door.

4.3.3 Scantlings of the primary members are generally to be verified by direct calculations in association with the external design pressure given in 3.1.1 and permissible stresses given in 2.1.1. Normally, formulae for simple beam theory may be applied.

5. Scantlings of Inner Doors

5.1 General

5.1.1 For determining scantlings of the primary members the requirements of 4.3.3 apply in conjunction with the loads specified in 3.2.

5.1.2 Where inner doors also serve as vehicle ramps, the scantlings are not to be less than those required for vehicle decks as per Section 7, D.7.2.

5.1.3 The distribution of the forces acting on the securing and supporting devices is generally to be verified by direct calculations taking into account the flexibility of the structure and the actual position and stiffness of the supports.

6. Securing and Supporting of Bow Doors

6.1 General

6.1.1 Bow doors are to be fitted with adequate means of securing and supporting so as to be commensurate with the strength and stiffness of the surrounding structure. The hull supporting structure in way of the bow doors is to be suitable for the same design loads and design stresses as the securing and supporting devices. Where packing is required, the packing material is to be of a comparatively soft type, and the supporting forces are to be carried by the steel structure only. Other types of packing may be considered. The maximum design clearance between securing and supporting devices is generally not to exceed 3 mm. A means is to be provided for mechanically fixing the door in the open position.

6.1.2 Only the active supporting and securing devices having an effective stiffness in the relevant direction are to be included and considered to calculate the reaction forces acting on the devices. Small and/or flexible devices such as cleats intended to provide load compression of the packing material are not generally to be included in the calculations called for in 6.2.5. The number of securing and supporting devices is generally to be the minimum practical whilst taking into account the redundancy requirements given in 6.2.6 and 6.2.7 and the available space for adequate support in the hull structure.

6.1.3 For opening outwards visor doors, the pivot arrangement is generally to be such that the visor is self closing under external loads, that is $M_Y > 0$.

6.2 Scantlings

6.2.1 Securing and supporting devices are to be adequately designed so that they can withstand the reaction forces within the permissible stresses given in 2.1.1.

6.2.2 For visor doors the reaction forces applied on the effective securing and supporting devices assuming the door as a rigid body are determined for the following combination of external loads acting simultaneously together with the self weight of the door:

Case 1 : F_X and F_Z,

Case 2 : $0.7F_Y$ acting on each side separately together with $0.7F_X$ and $0.7F_Z$.

The forces F_X, F_Y and F_Z are to be determined as indicated in 3.1.2 and applied at the centroid of the projected areas.

6.2.3 For side-opening doors the reaction forces applied on the effective securing and supporting devices assuming the door as a rigid body are determined for the following combination of external loads acting simultaneously together with the self weight of the door.

Case 1 : F_X, F_Y and F_Z acting on both doors

Case 2 : $0.7F_X$ and $0.7F_Z$ acting on both doors and $0.7F_Y$ acting on each door separately,

for F_X, F_Y and F_Z see 3.1.2.

6.2.4 The support forces as determined according to case 1 in 6.2.2 and 6.2.3 shall generally result in a zero moment about the transverse axis through the centroid of the area A_X. For visor doors, longitudinal reaction forces of pin and/or wedge supports at the door base contributing to this moment are not to be of the forward direction.

6.2.5 The distribution of the reaction forces acting on the securing and supporting devices may require to be verified by direct calculations taking into account the flexibility of the hull structure and the actual position and stiffness of the supports. This is, for instance, the case when the bow door is supported statically undetermined.

6.2.6 The arrangement of securing and supporting devices in way of these securing devices is to be designed with redundancy so that in the event of failure of any single securing or supporting device the remaining devices are capable of withstanding the reaction forces without exceeding by more than 20 per cent the permissible stresses as given in 2.1.

6.2.7 For visor doors, two securing devices are to be provided at the lower part of the door, each capable of providing the full reaction force required to prevent opening of the door within the permissible stresses given in 2.1.1. The opening moment M_O to be balanced by this reaction force, is not to be taken less than the greater of the following values:

$$M_{O1} = F_H d + 5A_X a \qquad \text{[kNm]}$$

$$M_{O2} = \Delta x\sqrt{F_X^2 + F_Z^2} \qquad \text{[kNm]}$$

F_H = Horizontal design force [kN], acting forward in the centre of gravity, $F_H = 10W_D$

d = Vertical distance [m] from the hinge axis to the centre of gravity of the door mass, as shown in Figure 23.2.

Δx = 0.25e [m]

e = Distance [m] as defined in Figure 23.2.

a = Distance [m] as defined in 3.1.3.

6.2.8 For visor doors, the securing and supporting devices excluding the hinges are to be capable of resisting the vertical design force $F_V = F_Z - 10W_D$ [kN] within the permissible stresses given in 2.1.1.

6.2.9 All load transmitting elements in the design load path, from door through securing and supporting devices into the ship structure, including welded connections, are to be of the same strength standard as required for the securing and supporting devices.

6.2.10 For side-opening doors, thrust bearings are to be provided in way of girder ends at the closing of the two leaves to prevent one leaf to shift towards the other one under effect of unsymmetrical pressure. An example for a thrust bearing is shown in Figure 23.3. Securing devices are to be provided so that each part of the thrust bearing can be kept secured on the other

part. Any other arrangement serving the same purpose may be accepted.

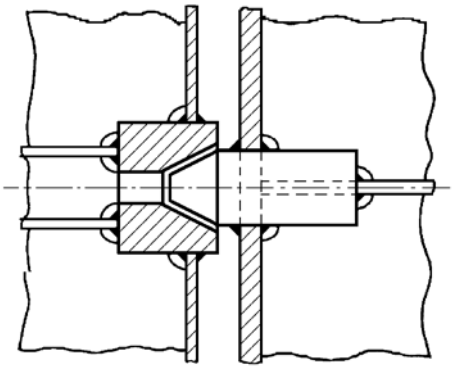

Figure 23.3 Thrust bearing

7. Arrangement of Securing and Locking Devices

7.1 Systems for Operation

7.1.1 Securing devices are to be simple to operate and easily accessible.

Securing devices are to be equipped with mechanical locking arrangement (self locking or separate arrangement), or to be of the gravity type. The opening and closing systems as well as securing and locking devices are to be interlocked in such a way that they can only operate in the proper sequence.

7.1.2 Bow doors and inner doors giving access to vehicle decks are to be provided with an arrangement for remote control, from a position above the freeboard deck of:

- The closing and opening of the doors, and
- Associated securing and locking devices for every door.

Indication of the open/closed position of every securing and locking device is to be provided at the remote control stations. The operating panels for operation of doors are to be inaccessible to unauthorized persons. A notice plate, giving instructions to the effect that all securing devices are to be closed and locked before leaving harbour, is to be placed at each operating panel and is to be supplemented by warning indicator lights.

7.1.3 Where hydraulic securing devices are applied, the system is to be mechanically lockable in closed position. This means that, in the event of loss of the hydraulic fluid, the securing devices remain locked. The hydraulic system for securing and locking devices is to be isolated from other hydraulic circuits, when in closed position.

7.2 Systems for Indication / Monitoring

The requirements according to 7.2.3 - 7.2.6 are only for ships with Ro-Ro spaces (with or without passengers) as defined in Chapter II-2, Regulation 3 of SOLAS 74.

7.2.1 Separate indicator lights are to be provided on the navigation bridge and on the operating panel to show that the bow door and inner door are closed and that their securing and locking devices are properly positioned. Deviations from the correct closing state are to be indicated by acoustic and visual alarms. The indication panel is to be provided with a lamp test function. It shall not be possible to turn off the indicator lights.

7.2.2 The indicator system is to be designed on the self-monitoring principle and is to be alarmed by visual and audible means if the door is not fully closed and not fully locked or if securing devices become open or locking devices become unsecured. The power supply for the indicator system is to be independent of power supply for operating and closing doors. The sensors of the indicator system are to be protected from water, ice formation and mechanical damages. Degree of protection: at least IP 56.

7.2.3 The indication panel on the navigation bridge is to be equipped with a selector switch “harbour/sea voyage”, so arranged that alarm is given if vessel leaves harbour with the bow door or inner door not closed and with any of the securing devices not in the correct position.

7.2.4 A water leakage detection system with audible alarm and television surveillance are to be arranged to provide an indication to the navigation bridge and to the engine control room of leakage through the inner door.

7.2.5 For the space between the bow door and the inner door a television surveillance system is to be fitted with a monitor on the navigation bridge and in the engine control room. The system shall monitor the position of doors and a sufficient number of their securing devices. Special consideration is to be given for lighting and contrasting colour of object under surveillance.

7.2.6 A drainage system is to be arranged in the area between bow door and ramp, as well as in the area between the ramp and inner door where fitted. The system is to be equipped with an acoustic alarm function to the navigation bridge for water level in these areas exceeding 0.5 m. above the car deck level.

8. Operating and Maintenance Manual

8.1 An operating and maintenance manual for the bow door and inner door has to be provided on board and contain necessary information on:

- Description of the door system and design drawings,
- Service conditions, service area restrictions and acceptable clearances for supports,
- Maintenance and function testing,
- Register of inspections and repairs.

This Manual has to be submitted for approval.

Note:
It is recommended that inspections of the door supporting and securing devices be carried out by the ship's staff at monthly intervals and/or following incidents that could result in damage, including heavy weather and/or contact in the region of the shell doors. These inspections are to be reported. Any damages recorded during such inspections are to be reported to TL.

8.2 Documented operating procedures for closing and securing the bow door and inner doors are to be kept on board and posted at an appropriate place.

C. Side Shell Doors and Stern Doors

1. General

1.1 These requirements apply to side shell doors abaft the collision bulkhead and to stern doors leading into enclosed spaces.

1.2 For the definition of securing, supporting and locking devices see B.1.3.

2. Arrangement

2.1 Stern doors for passenger vessels are to be situated above the freeboard deck. Stern doors for Ro-Ro cargo ships and side shell doors may be either below or above the freeboard deck.

2.2 Side shell doors and stern doors are to be so fitted as to ensure tightness and structural integrity commensurate with their location and the surrounding structure.

2.3 Where the sill of any side shell door is below the uppermost load line, the arrangement is to be specially considered. In case of ice strengthening see Section 14.

2.4 Doors should preferably open outwards.

3. Strength Criteria

The requirements of B.2 apply.

4. Design Loads

4.1 The design forces considered for the scantlings of primary members, securing and supporting devices of side shell doors and stern doors are to be not less than the greater of the following values:

4.1.1 Design forces for securing or supporting devices of doors opening inwards:

External force : $F_e = AP_e + F_P$ [kN]

Internal force : $F_i = F_O + 10W_D$ [kN]

1.2 Design forces for securing or supporting devices of doors opening outwards:

External force : $F_e = AP_e$ [kN]

Internal force : $F_i = F_O + 10W_D + F_P$ [kN]

4.1.3 Design forces for primary members:

External force : $F_e = AP_e$ [kN]

Internal force : $F_i = F_O + 10W_D$ [kN]

A = Area of the door opening [m^2],

W_D = Mass of the door [t],

F_P = Total packing force [kN], where the packing line pressure is normally not to be taken less than 5 N/mm,

F_0 = The greater of F_C or 5A [kN],

F_C = Accidental force [kN] due to loose of cargo etc., to be uniformly distributed over the area A and not to be taken less than 300 kN. For small doors such as bunker doors and pilot doors, the value of F_C may be appropriately reduced. However, the value of F_C may be taken as zero, provided an additional structure such as an inner ramp is fitted, which is capable of protecting the door from accidental forces due to loose cargoes,

P_e = External design pressure determined at the centre of gravity of the door opening and not taken less than:

= $P_S + P_{WS}$ according to Section 5, C.2.1 and D.2.1., or:

P_e = $10(T-Z_G)+25$ [kN/m^2] for $Z_G<T$

P_e = 25 [kN/m^2] for $Z_G \geq T$

Z_G = Height of centre of area of door above base line [m].

4.2 For stern door of ships fitted with bow doors, P_e is not to be taken less than:

$$P_e = 0.6\left(\frac{1+C_{RS}}{2}\right)C_H\left(0.8+0.6\sqrt{L}\right)^2 \quad [kN/m^2]$$

C_{RS} = Service range coefficient as defined in Section 5, A.2.1.

C_H = See B.3.1.1.

5. Scantlings

5.1 General

The requirements of B.4.1 apply analogously with the following additions:

- Where doors also serve as vehicle ramps, the design of the hinges shall take into account the ship's angle of trim and heel which may result in uneven loading on the hinges.

- Shell door openings are to have well-rounded corners and adequate compensation is to be arranged with web frames at sides and stringers or equivalent above and below.

5.2 Plating and Secondary Stiffeners

The requirements of B.4.2.1 and B.4.2.2 apply analogously with the following additions:

Where doors serve as vehicle ramps, plate thickness and stiffener scantlings are to comply with the requirements of Section 7, D.7.2.

5.3 Primary Structure

The requirements of B.4.3 apply analogously taking into account the design loads specified in 4.

6. Securing and Supporting of Side Shell and Stern Doors

6.1 General

The requirements of B.6.1.1 and B.6.1.2 apply analogously.

6.2 Scantlings

The requirements of B.6.2.1, B.6.2.5, B.6.2.6 and B.6.2.9 apply analogously taking into account the design loads specified in 4.

7. Arrangement of Securing and Locking Devices

7.1 Systems for Operation

7.1.1 The requirements of B.7.1.1 apply.

7.1.2 Doors which are located partly or totally below the freeboard deck with a clear opening area greater than 6 m^2 are to be provided with an arrangement for remote control, from a position above the freeboard deck according to B.7.1.2.

7.1.3 The requirements of B.7.1.3 apply.

7.2 Systems for Indication / Monitoring

7.2.1 The requirements of B.7.2.1, B.7.2.2 and B.7.2.3 apply analogously to doors leading directly to special category spaces or Ro-Ro spaces, as defined in SOLAS 1974, Chapter II-2, Reg. 3, through which such spaces may be flooded.

7.2.2 For Ro-Ro passenger ships, a water leakage detection system with audible alarm and television surveillance is to be arranged to provide an indication to the navigation bridge and to the engine control room of any leakage through the doors.

For Ro-Ro cargo ships, a water leakage detection system with audible alarm is to be arranged to provide an indication to the navigation bridge.

8. Operating and Maintenance Manual

The requirements of B.8 apply analogously.

SECTION 24

QUALITY ASSURANCE REQUIREMENTS FOR THE HULL CONSTRUCTION OF SHIPS

A. General

1. Scope of the Quality Assurance Scheme

1.1 This Section specifies the minimum Quality System requirements for a shipyard to construct ships under Türk Loydu's Quality Assurance Scheme.

1.2 For the purposes of this Section of the Rules, hull construction comprises the hull structure; containment systems, including those which are independent of the main hull structure; appendages; superstructures; deckhouses; and closing appliances all as required by the Rules.

1.3 Although the requirements of this Scheme are, in general, for steel ships of all welded construction, other materials for use in hull construction will be considered.

2. Quality Assurance Scheme Definitions

Türk Loydu's Quality Assurance requirements for the hull construction of ships are defined as follows:

Quality Assurance: All activities and functions concerned with the attainment of quality including documentary evidence to confirm that such attainment is met.

Quality system: The organization structure, responsibilities, activities, resources and events laid down by Management that together provide organized procedures (from which data and other records are generated) and methods of implementation to ensure the capability of the shipyard to meet quality requirements.

Quality programme: A documented set of activities, resources and events serving to implement the quality system of an organization.

Quality plan: A document derived from the quality programme setting out the specific quality practices, special processes, resources and activities relevant to a particular ship or series of sister ships. This document will also indicate the stages at which, as a minimum, direct survey and/or system monitoring will be carried out by the Classification Surveyor.

Quality control: The operational techniques and activities used to measure and regulate the quality of hull construction to the required level.

Inspection: The process of measuring, examining, testing, gauging or otherwise comparing the item with the approved drawings and the shipyard's written standards including those which have been agreed by TL for the purposes of classification of the specific ship type concerned.

Assessment: The initial comprehensive review of the shipyard's quality systems, prior to the granting of approval, to establish that all the requirements of these Rules have been met.

Audit: A documented activity aimed at verifying by examination and evaluation that the applicable elements of the quality programme continue to be effectively implemented.

Hold point: A defined stage of manufacture beyond which the work must not proceed until the inspection has been carried out by all the relevant personnel.

System monitoring: The act of checking, on a regular basis, the applicable processes, activities and associated documentation that the Shipbuilder's quality system continues to operate as defined in the quality programme.

Special process: A process where some aspects of the required quality cannot be assured by subsequent inspection of the processed material alone. Manufacturing special processes include welding, forming and the application of protective treatments. Inspection and testing processes classified as special processes include non-destructive examination and pressure and leak testing.

B. Application

1. Certification of the Shipyard

1.1 **TL** will give consideration to a shipyard's Quality Assurance System provided, at all times, there is full commitment by all the shipyard personnel to the implementation and maintenance of this system. On satisfactory completion of assessments and audits **TL** will issue certificates of approval to the shipyard as indicated in **1.2.**

1.2 **TL** Quality Assurance Scheme (hereinafter may also be referred to as "Scheme") comprises:

Part 1 The requirements of the Quality System for hull construction which are applicable to shipyards operating a quality programme but not necessarily constructing to **TL**'s Class. Certificates of approval valid for three years will be issued, with intermediate audits at intervals of 6 months.

Part 2 The Quality System requirements for hull construction for application to ships under construction to **TL**'s Class as part of the Special Survey. **TL'**s particular requirements for construction of ships to its Class, and the continuous involvement in the hull construction process by a combination of direct survey and systems monitoring by **TL**'s Surveyors, are provided for by Part 2. Where TL considers that there is a stage in construction at which a high degree of direct inspection by the Surveyors is desirable, this stage will be described on the Part 2 Approval Certificate.

Certificates of approval for Part 2 will be valid for one year, and will be issued after satisfactory assessment/audit carried out at a suitable stage during construction to **TL**'s Class. Part 1 certification will automatically be issued, or re-issued as applicable, on attainment of Part 2 approval.

1.3 Chemical carriers with cargo tank structure of material other than carbon manganese steel and the cargo containment system on ships for liquefied gases will be specially considered. The procedure relating to the construction of such structure on chemical carriers and liquefied gas containment systems is to be separately prescribed in the Quality Plan which will be subject to approval by TL.

1.4 The Quality System at a shipyard will be examined for compliance with these Rules by the assessments and audits as laid down in items 4. C and D. Initial and periodical approval of the system will be considered by the Committee on receipt of satisfactory assessment and audit reports.

1.5 All information and data submitted by a Shipbuilder for approval under this Scheme and for maintenance of approval will be treated by TL in strict confidence and will not be disclosed to any third party without the prior written consent of the Shipbuilder.

1.6 A list of shipyards approved under the Scheme will be held in the List of Shipyards Approved to the Requirements of the Quality Assurance Scheme.

2. Documentation and Procedures

2.1 Under either Part of the Scheme, the documentation to meet the requirements of 4 is to be submitted. This documentation includes the Quality Manual, Quality Plans, documented procedures and work instructions.

2.2 Additionally, under Part 2 of the Scheme the documentation to meet the requirements of C is to be submitted for approval. Construction plans and all necessary particulars are also to be submitted for approval in accordance with the relevant requirements of the Rules.

3. Amendments

3.1 Any major changes to the documentation or procedures required by B or C are to be re-submitted.

4. Requirements of Parts 1 and 2 of the Scheme

4.1 General

4.1.1 The requirements of this section are applicable to shipyards seeking approval under Parts 1 and 2 of the Scheme.

4.2 Policy statement

4.2.1 A policy statement, signed by the top manager of the shipyard concerned, confirming the full commitment of all levels of personnel in the shipyard to the implementation and sustained operation of quality assurance methods is to be included in the Quality Manual.

4.3 Responsibility

4.3.1 Personnel responsible for functions affecting quality are to have defined responsibility and authority to identify, control and evaluate quality.

4.4 Owner representative

4.4.1 The Shipbuilder is to appoint an Owner Representative, who is to be independent of other functions unless specifically agreed otherwise by **TL**, and who is to have the necessary authority and responsibility for ensuring that the requirements of the Scheme are complied with.

4.4.2 The Owner Representative is to have the authority to stop production if serious quality problems arise.

4.5 Quality control and testing personnel

4.5.1 The Shipbuilder is to utilize quality control and testing personnel whose performance and continued freedom of influence from production pressures is to be systematically confirmed by the Owner Representative.

4.6 Resources

4.6.1 Sufficient resources shall be provided by the shipyard to enable the requirements identified by the Quality Management System to be effectively implemented.

4.7 The quality management system

4.7.1 The Shipbuilder is to establish, document and maintain an effective Quality Management System that will ensure and demonstrate that materials and consumables used, and working processes employed, conform to the requirements for hull construction.

4.7.2 Quality Manual. The basic documentation is to be in the form of a Quality Manual which sets out the general quality policies and which references the detailed procedures, standards, etc., and includes the requirements of 4 and, where appropriate, C.

4.7.3 Procedures. The Shipbuilder is to establish, document and maintain an adequate and defined control of the hull construction process comprising:

4.7.3.1 Defined and documented controls, processes, procedures, tolerances, acceptance/rejection criteria and workmanship standards; and

4.7.3.2 The provision of Quality Plans for each ship or series of sister ships for the processes and procedures for manufacture, inspection and testing involved from receipt of material through to completion of the hull construction process.

4.7.4 Work instructions. The Shipbuilder is to develop and maintain clear and complete documented work instructions for the processes and standards involved in the construction of the hull. Such instructions are to provide directions to various levels of personnel.

4.8 Regulatory requirements

4.8.1 The Shipbuilder is to establish that the requirements of all applicable Regulations are clearly specified and agreed with the Owner/Classification Society/Regulatory Authority. These Regulations are to be made available for all functions that require them and their suitability is to be reviewed.

4.8.2 The Shipbuilder is to establish a design verification procedure to ensure that the regulatory requirements have been incorporated into the design output.

4.9 Control of hull drawings

4.9.1 The Shipbuilder is to establish, document and maintain a procedure for the submission to the

Classification Society and other regulatory bodies of all the necessary drawings required for approval sufficiently early and in such a manner that the requirements of the Classification Society and other regulatory bodies can be included in the design before construction commences. This procedure is to include a provision which ensures that all amendments to approved drawings are incorporated in the working drawings and that design revisions are re-submitted for approval.

4.10 Documentation and change control

4.10.1 The Shipbuilder is to establish a procedure to ensure that:

- Valid drawings, specifications, procedures, work instructions and other documentation necessary for each phase of the fabrication process are prepared;

- All necessary documents and data are made readily available at all appropriate work, testing and inspection locations;

- All amended drawings and changes to documentation are processed in a timely manner to ensure inclusion in the production process;

- Records are maintained of amendments and changes to documentation; and

- Provision is made for the prompt removal or immediate identification of all superseded drawings and documentation throughout the shipyard.

4.11 Purchasing data and receipt

4.11.1 The Shipbuilder is to maintain purchasing documents containing a clear description of the materials ordered for use in hull construction and the standards to which material must conform, and the identification and certification requirements.

4.11.2 For the requirements for receiving inspection of purchased items *see* 4.15

4.12 Owner supplied material

4.12.1 The Shipbuilder is to have procedures for the inspection, storage and maintenance of Owner supplied materials and equipment.

4.13 Identification and traceability

4.13.1 The Shipbuilder is to establish and maintain a procedure to ensure that materials and consumables used in the hull construction process are identified (by color-coding and/or marking as appropriate) from arrival at the shipyard through to erection in such a way as to enable the type and grade to be readily recognized. The procedure is to ensure that the Shipbuilder has the ability to identify material in the completed vessel and ensure traceability to the mill sheets.

4.14 Fabrication control

4.14.1 The Shipbuilder is to establish, document and maintain suitable procedures to ensure that fabrication and construction operations are carried out under controlled conditions. Controlled conditions are to include:

4.14.1.1 Clearly documented work instructions defining material treatment, marking, cutting, forming, sub-assembly, assembly, erection, fitting of closing appliances, use of fabrication aids and associated fit-up, weld preparation, welding and dimensional control procedures;

4.14.1.2 Criteria for workmanship and manufacturing tolerances. These are to be documented in a clear manner and made available to the appropriate workforce, and are to include acceptance/rejection criteria; and

4.14.1.3 Documented instructions for the control of

equipment and machines used in fabrication. These are to be made available to the appropriate workforce and supplied to individuals where necessary.

4.14.2 The Shipbuilder is to establish and control

welding, non-destructive examination and painting which are part of the fabrication system, the equipment used in such processes and the environment in which they are employed. Operators of these special processes are to be properly qualified. Details of these processes are to be included in the relevant Quality Plans.

4.14.3 A list of approved welding procedures is to be maintained and made available to relevant personnel. Records of the results of testing for approval are also to be maintained. Lists of appropriately qualified welders are to be maintained. Procedures for distribution and recycling of welding consumables are to be implemented.

4.14.4 The Shipbuilder is to establish, document and maintain adequate maintenance schedules and standards for all equipment associated with the hull construction process.

4.15 Control of inspection and testing

4.15.1 The Shipbuilder is to be responsible for ensuring that all incoming plates, sections, castings, components, fabrications and consumables and other materials used in the hull construction process are inspected or otherwise verified as conforming to purchase order requirements.

4.15.2 The Shipbuilder is to provide an inspection system at suitable stages of the fabrication process from the material delivery to the completion of hull construction. The inspection system is to confirm and record the inspections carried out.

4.16 Indication of inspection status

4.16.1 The Shipbuilder is to establish and maintain a system for identifying the inspection status of structural components at appropriate stages of the fabrication process. This may include the direct marking of components. Records of inspection and measurements are to be identifiable to components to which they refer and be readily accessible to production and inspection personnel and to the Surveyors.

4.17 Inspection, measuring and test equipment

4.17.1 The Shipbuilder is to be responsible for the control, calibration, and maintenance of the inspection, measuring and test equipment used in the fabrication and non-destructive examination of the hull structure.

4.17.2 The calibration system is to allow traceability back to appropriate International Standards. Where these do not exist the basis of calibration is to be defined.

4.18 Non-conforming materials and corrective action

4.18.1 The Shipbuilder is to establish and define procedures to provide for:

- The clear identification and segregation from production areas of all plates, sections, castings, components, fabrications, consumables and other materials which do not conform to the agreed specification; and

- The initiation of authorized corrective or alternative action.

4.19 Protection and preservation of quality

4.19.1 The Shipbuilder is to establish and maintain a procedure to control handling and preservation processes for both the material used in fabrication and the structural components at all stages of the fabrication process. This procedure is to ensure conformance to specified requirements and established standards.

4.19.2 Welding consumables are to be stored, handled and recycled according to maker's recommendations.

4.20 Records

4.20.1 The Shipbuilder is to develop and maintain records that demonstrate achievement of the required quality and the effective operation of the Quality System. Records demonstrating sub-contractor

achievement of these requirements are to be maintained. These records are to be retained and available for a defined period. These records are to include identification of materials and consumables used in fabrication, the number and class of defects found during fabrication and information regarding corrective action taken. Records of particular processes, e.g. plate surface preparation and priming, marking, cutting, forming, accuracy control, non-destructive examination, audits and all other records pertaining to the operation of the Quality System are also to be maintained.

4.21 Internal audit and management review

4.21.1 Internal audits of the performance of all aspects of the systems relating to design, production and testing are to be carried out systematically by appointed staff and recorded under the authority of the Owner Representative. These staff members will not normally audit functions for which they are directly responsible.

4.21.2 Using data obtained from the audits and any other available relevant information, management reviews are to take place at specified intervals or more frequently as deemed necessary in order to review the performance of the Quality System.

4.21.3 The Shipbuilder is to establish, document and maintain a procedure for corrective application of data feedback from previous construction, including previous ships during the guarantee period.

4.21.4 The Shipbuilder is to establish, document and maintain a procedure to provide for the analysis of departures from manufacturing standards, steel material scrapped, reworked or repaired during the fabrication and construction process in order to detect trends, investigate the cause to determine the action needed to correct the processes and work procedures, or to identify the further training of operators as appropriate.

4.21.5 Agreed improvements to the Quality System are to be implemented within a time scale appropriate to the nature of the improvement.

4.22 Training

4.22.1 The Shipbuilder is to establish and maintain a system to identify training needs and ensure that all personnel involved in the fabrication, erection and quality-involved functions have adequate experience, training and qualifications. This requirement extends to sub-contractor personnel working within the shipyard. Records are to be available to the **TL** Surveyor.

4.23 Sampling

4.23.1 Any sampling processes used by the Shipbuilder are to be in accordance with specified or Statutory Requirements or to the satisfaction of the **TL** Surveyor as applicable.

4.24 Sub-contracted personnel, services and components

4.24.1 The requirements of the Scheme are applicable, as appropriate, to all sub-contractor personnel and sub-contracted services operating within the shipyard.

4.24.2 The requirements of the Scheme are not applicable to sub-contractor personnel or sub-contracted services operating at locations outside the shipyard. In these circumstances it will be necessary for inspections to be carried out by the **TL** Surveyor using conventional survey methods.

C. Additional Requirements for Part 2 of the Scheme

1. Quality System Procedures

1.1 The procedures detailed in B.4.7. are to be submitted for approval.

2. Quality Plans

2.1 Quality Plans for ships which are to be classed by **TL** are to be submitted for approval well in advance of commencement of work, irrespective of any

submissions that may have been made for sister ships under Part 1 of the Scheme. Such Quality Plans are to outline all of the manufacturing, testing and inspection operations to be performed by the Shipbuilder and by which personnel they will be carried out. The Quality Plans are then to be submitted to the **TL** Surveyors who will indicate all the stages at which they will perform system monitoring, carry out direct inspection and participate in hold point inspections. These hold points will include, but not be limited to, the following:

- Radiographs and other test records of non-destructive examinations as required for Classification purposes, *see* the Rules for Materials.

- The items described in A. relevant to the scope of this Section.

2.2 Notwithstanding what may have been agreed in the Quality Plans, the TL Surveyors have the discretion to increase their involvement.

3. Material Supplier Approval

3.1 The Shipbuilder is to ensure that hull construction materials and consumables used are selected from manufacturers who are approved by **TL**.

4. Identification and Traceability

4.1 The procedure required by B.4.13.1 is to be submitted for approval.

5. Fabrication Control

5.1 The information required by B.4.14.1.2 will be examined for acceptability.

5.2 Procedures for material treatment, forming, weld preparation and welding are to be submitted for approval.

5.5.3 Procedures required by B.4.14.3 are to be submitted to the **TL** Surveyors for approval.

6. Control of Inspection and Testing

6.1 The inspection stages incorporated into the Scheme are to include specific checks for fit-up and welding which are to be carried out at each sub-assembly, assembly, pre-erection and erection stage as well as self-checking by the operator. The number of recorded checks to each stage will be agreed with the **TL** Surveyor, after consideration of documentary evidence of quality being achieved. Repairs, where required, are to be effected after each check. Collated Quality Control data to demonstrate the efficiency of the above self-check system are to be made available to the **TL** Surveyor by the Shipbuilder.

The Quality Plans referred to in B.4.7.3.2 provide the opportunity for the Shipbuilder and the **TL** Surveyor to consider the structural design and ship type fully in order to determine the most efficient and effective inspection stages.

7. Control of Non-Conforming Materials and Corrective Action

7.1 All predetermined repair procedures are to be consistent with the requirements of B.4.7.3.1 and are to be to the satisfaction of the **TL** Surveyor. Where a defect is found, whether by the **TL** Surveyor or through shipyard inspection, for which no agreed repair procedure exists, approval is to be obtained from the **TL** Surveyor before any corrective action is affected.

8. Records

8.1 The shipyard is to make data available to the **TL** Surveyor, to demonstrate the efficiency of the inspection system, *see C.6.1.*

9. Training

9.1 The competence of the welding operators, non-destructive examination and other personnel involved in special processes and inspection are to be to the satisfaction of the **TL** Surveyor.

10. Sub-contracted Personnel, Services and Components

10.1 The requirements of the Scheme are not applicable to those services operating at locations outside the shipyard. It will be necessary for inspections to be carried out by the **TL** Surveyor using conventional survey methods.

10.2 The methods of control for the requirements of B.4.24.1 are to be submitted to the **TL** Surveyor.

D. Initial Assessment of the Shipyard

1. General

1.1 In the first instance applications for approval under this Scheme will be considered on the recommendation of the local Surveyors.

1.2 After receipt and appraisal of the main quality documentation, an assessment of the shipyard is to be carried out by the Surveyors to examine all aspects of the Quality System applicable to hull construction.

1.3 The Surveyors will review the quality arrangements proposed by the Shipbuilder at the shipyard. They may advise as to how the proposed Quality System might be improved and where it is considered inadequate, advise how it might be revised to be acceptable to TL.

1.4 For assessment to Part 1 of the Scheme, the Surveyors will review the Quality System in association with the quality documentation and will check that all aspects of the System are established and in accordance with the requirements of B.2.

1.5 For assessment of Part 2 of the Scheme, the Surveyors will confirm that the requirements given in B.2 have been fully implemented and are complied with by a detailed examination of work in progress and by confirming that workmanship and the quality level being consistently achieved are to their satisfaction.

E. Approval of the Shipyard

1. General

1.1 If the initial assessment confirms that the shipyard's quality arrangements are satisfactory, the **TL** will issue Part 1 or Part 2 and Part 1 of TL's Quality Assurance Approval Certificates as appropriate. Maintenance of approval will be subject to the provisions of F.

1.2 Approval by another organization will not be accepted as sufficient evidence that the arrangements for hull construction comply with these requirements.

F. Maintenance of Approval

1. General

1.1 For Part 2 of the Scheme, the arrangements approved at the shipyard are to be kept under review by the Surveyors to ensure that the approved Quality System is being maintained in a satisfactory manner. This is to be carried out by:

- Regular and systematic audits by the **TL** Surveyor.

- Comprehensive Annual Audits. The audit team leader will be formally nominated by **TL**.

1.2 Where a comprehensive audit cannot be carried out due to lack of a current building programme to Class, demonstration that the requirements of Part 1 of the Scheme are being maintained may be confirmed by audit review at intervals of six months, normally by the local Surveyors. Where necessary a comprehensive triennial audit would be carried out by a Surveyor formally nominated by **TL**. The degree of re-assessment for re-approval at the recommencement of building to **TL**'s Class would be at the discretion of the **TL** Committee.

1.3 All documentation, including reports, is to be available to the **TL** Surveyors.

1.4 Minor alterations in the approved procedures may be permitted provided that the Surveyors are advised and their prior concurrence obtained. Major alterations would need to be submitted for approval and may require an additional audit.

1.5 In a shipyard constructing ships to **TL**'s Class, the following are applicable:

- The **TL** Surveyor is to be allowed access at all reasonable times to all records pertaining to quality and to all parts of the shipyard involved in the implementation and maintenance of the Quality Assurance Programme.

- The **TL** Surveyor is immediately to advise the Owner Representative of any matter pertaining to the Quality System with which he is not satisfied.

- When minor deficiencies in the approved procedures are discovered during audits, or if workmanship is considered unsatisfactory, the TL Surveyor will apply more intensive auditing and inspection.

- Notwithstanding any of the provisions of the Quality System, all work related to Classification of ships with **TL** is to be to the satisfaction of the **TL** Surveyor.

G. Suspension or Withdrawal of Approval

1. General

1.1 When the Surveyors have drawn attention to significant faults or deficiencies in the Quality System or its operation and these have not been rectified within a period of time acceptable to TL, the approval of the system, together with the associated certification, will be withdrawn and the shipyard's name deleted from the List of Shipyards Approved to the Requirements of the Quality Assurance Scheme.

1.2 If a significant period of time elapses between such withdrawal and any application for reinstatement, the re-approval procedures, if agreed to by the **TL** Committee, may require a restructuring of the Quality Management System and will always require a complete re-examination as for an initial assessment.

SECTION 25

REQUIREMENTS FOR IN-WATER SURVEYS IN LIEU OF DRYDOCKING SURVEYS

A. General

1. Application

The requirements in this section apply to ships intended to be assigned the class notation **IWS**.

2. Documentation

In addition to the documents listed in Section 1÷21, the following documents are to be submitted for approval:

2.1 A shell expansion drawing of the ship indicating the following information:

- External hull markings
- Bilge keels
- Drain plugs
- Watertight and oil tight bulkheads
- All shell openings and means of access

2.2 Specific plans and data detailing:

- Rudder, rudder stock, stern frame and associated fittings, propeller (s)
- "A" frames, bossing, any other attachments to the hull
- Stabilizer fin boxes, bow thruster(s)

2.3 Reference data and instructions for the divers for any necessary underwater operations such as means of access to rudder bearings and for determining clearances of rudder bearings or propeller shaft strut and stern bearings, removal of sea suction grids and blanking off of openings.

B. Underwater Conditions

1. The vessel's underwater body is to be protected against corrosion by an appropriate corrosion protection system in combination with a coating system.

2. The hull should be permanently marked externally to indicate the position of transverse primary members, bulkheads or frames numbers. This may entail a weld bead grid system on the hull, a contrasting colour system or any other arrangement.

3. The vessel's bottom is to be sufficiently clean. Overall or spot cleaning may be required at the discretion of the attending surveyor.

C. Special Arrangements

The following special arrangements are to be incorporated into the ship's design in order to facilitate the underwater survey.

1. Stern Bearings

Means should be provided for ascertaining that the seal assembly on oil-lubricated bearing is intact and for verifying the clearance or weardown of the stern bearing. For oil-lubricated bearings, this may only require review of operating history and on board testing including accurate oil-loss records and check of the oil for contamination by sea water or white metal and/or oil sample reports.

For wood and rubber bearings, an opening in the top of the rope guard and a suitable gauge or wedge should be provided for checking the clearance by the diver. Where there is any doubt with oil-lubricated metal stern bearings, however, weardown could be checked by external measurements or by use of the vessel's wear-down gauge, where the gauge wells are located outboard of the seals or the vessel can be tipped.

For use of the wear-down gauges, up-to-date records of the base depth are to be maintained onboard.

2. Rudder Bearings

Means and access should be provided for determining the condition and clearance of the rudder bearings and for verifying that all parts of the pintle and gudgeon assemblies are intact and secure. This may require bolted access plates and a measuring arrangement. Where not practical, rudder pintle clearances may be

dispensed with if the attending surveyor is satisfied with the physical condition and securing arrangements of the pintle, review of operating history and on board testing.

3. Sea Connections

Means of blanking sea chest and sea connections should be provided for the removal of sea valves. Means are to be provided to enable the diver to confirm that the sea suction openings are clear.

4. Sea Valves

The sea valves and their attachment to sea chest are to be examined externally. Nonmetallic expansion pieces in sea water cooling and circulating systems are to be examined externally.

D. In-Water Survey Requirements

1. Underwater Areas

An examination of the entire vessel below the waterline is to be carried out by a certified diver using closed-circuit television with two-way communication capable of being monitored by the surveyor as required, or photographic documentation, or both, depending on the age and type of vessel.

Where practicable the in-water survey is to be carried out while the vessel is in light operating condition to facilitate the survey.

2. Above Waterline Areas

An examination of the outside of the shell plating above the waterline and exposed portions of appendages is to be carried out by the surveyor. Means are to be provided to enable the surveyor to accomplish this visual inspection.

3. Internal Inspection

Where a defect or damage is detected or suspected as a result of the in-water survey, the internal structure is to be examined as considered necessary to clarify or confirm the findings. Vessels operating in ice are to have the internal structure examined in way of areas which are susceptible to ice damage.

SECTION 26

STABILITY

A. General

1. Scope

Every passenger ship regardless of size and every cargo ship having a length, as defined in the International Convention on Load Lines in force, of 24 m and upwards shall comply with the stability requirements indicated in this Section and any other additional requirement stipulated by IMO, the relevant Administration and **TL**. Those ships which have additional class notations shall comply with additional stability requirements as given in the appropriate rule chapters.Having complied with the stability requirements, a ship may be assigned an appropriate class.

The stability requirements may be applied to cargo ships less than 24 m in length. However, some of the stability rules may be omitted by the approval of **TL**.

2. Definitions

For terms and definitions which are not given here, the definitions as given in the SOLAS 2009 Convention shall apply.

2.1 Administration

The Government of the State whose flag the ship is entitled to fly.

2.2 Near-coastal voyage

Means a voyage in the vicinity of the coast of a State as defined by the Administration of that State.

2.3 Passenger ship

Is a ship which carries more than twelve passengers as defined in Chapter 1, Part A Regulation 2(f) of the SOLAS Convention.

2.4 Cargo ship

Is any ship which is not a passenger ship, a ship of war and troopship, a ship which is not propelled by mechanical means, a wooden ship of primitive build, a fishing vessel and Pleasure yachts not engaged in trade, a mobile offshore drilling unit.

2.5 Oil tanker

Is a ship constructed or adapted primarily to carry oil inbulk in its cargo spaces and includes combination carriers and any chemical tanker as defined in Annex II of the MARPOL Convention when it is carrying a cargo or part cargo of oil in bulk**.**

2.6 Combination carrier

Is a ship designed to carry either oil or solid cargoes in bulk.

2.7 Crude oil tanker

Is an oil tanker engaged in the trade of carrying crude oil.

2.8 Product carrier

Is an oil tanker engaged in the trade of carrying oil other than crude oil.

2.9 Fishing vessel

Is a vessel used for catching fish, whales, seals, walrus or other living resources of the sea.

2.10 Special purpose ship

Means a mechanically self-propelled ship which, by reason of its function, carries on board more than 12 special personnel as defined in paragraph 1.3.11 of the Code of Safety for Special Purpose Ships (2008 SPS Code) MSC. 266(84), as may be amended, including passengers (ships engaged in research, expeditions and survey; ships for training of marine personnel; whale and fish factory ships not engaged in catching; ships processing other living resources of the sea, not engaged in catching or other ships with design features and modes of operation similar to ships mentioned above which, in the opinion of **TL** may be referred to this group).

2.11 Offshore supply vessel

Means a vessel which is engaged primarily in the transport of stores, materials and equipment to offshore installations and designed with accommodation and bridge erections in the forward part of the vessel and an exposed cargo deck in the after part for the handling of cargo at sea.

2.12 High-speed craft (HSC)

Is a craft capable of a maximum speed, in meters per second (m/s), equal to or exceeding:

$$V_{max} = 3.7 \cdot \nabla.^{0.1667}$$

where:

∇ = Displacement volume corresponding to the design waterline [m³].

2.13 Containership

Is a ship which is used primarily for the transport of marine containers.

2.14 Length

Should be taken as 96% of the total length on a waterline at 85% of the least moulded depth measured from the top of the keel, or as the length from the fore side of the stem to the axis of the rudder stock on the waterline, if that be greater. In ships designed with a rake of keel the waterline on which this length is measured should be parallel to the designed waterline.

2.15 Moulded breadth

Is the maximum breadth of the ship measured amidships to the moulded line of the frame in a ship with a metal shell and to the outer surface of the hull in a ship with a shell of any other material.

2.16 Moulded depth

Is the vertical distance measured from the top of the keel to the top of the freeboard deck beam at side. In wood and composite ships, the distance is measured from the lower edge of the keel rabbet.

2.17 Draught

Is the vertical distance from the moulded baseline to the waterline.

2.18 Freeboard

Is the distance between the assigned load line and freeboard deck.

2.19 Lightweight-Lightship weight

Displacement of a ship without consumables, stores, cargo, passengers, crew and effects and any liquids on board except that machinery and piping fluids, such as lubricants and hydraulics, are at operating levels. (See note under the item A.2.20)

2.20 Lightship condition

Is a ship complete in all respects, but without consumables, stores, cargo, crew and effects, and without any liquids on board except that machinery and piping fluids, such as lubricants and hydraulics, are at operating levels.

Note:
The weight of mediums on board for the fixed fire-fighting systems (e.g. freshwater, CO_2, dry chemical powder, foam concentrate, etc) shall be included in the lightweight and lightship condition defined in item 2.19 and 2.20, respectively.

2.21 Lightweight survey

Involves taking a survey of all items which should be added, deducted or relocated on the ship at the time of the inclining test so that the observed condition of the ship can be adjusted to the lightship condition. The mass, longitudinal, transverse and vertical location of each item should be accurately determined and recorded. Using this information, the static waterline of the ship at the time of the inclining test as determined from measuring the freeboard or verified draught marks of the ship, the ship's hydrostatic data, and the sea water density, the lightship displacement and longitudinal center of gravity (LCG) can be obtained.

2.22 Weathertight

Weathertight means that in any sea conditions water will not penetrate into the ship.

2.23 Watertight

Watertight - means having scantlings and arrangements capable of preventing the passage of water in any direction under the head of water likely to occur in intact and damaged conditions. In the damaged condition, the head of water is to be considered in the worst situation at equilibrium, including intermediate stages of flooding. A watertight closing appliance is also considered weathertight.

2.24 Down-flooding

Ingress of water through external openings to buoyancy volumes.

2.25 Down-flooding angle

The minimum heel angle where an external opening without weathertight closing appliance is submerged.

Openings required to be fitted with weathertight closing devices under the ICLL but, for operational reasons, are required to be kept open should be considered as downflooding points in stability calculation.

Note: *In applying down-flooding angle, openings which cannot be or are incapable of being closed weathertight include ventilators (complying with ILLC 19(4)) that for operational reasons have to remain open to supply air to the engine room or emergency generator room (if the same is considered buoyant in the stability calculation or protecting openings leading below) for the effective operation of the ship.*

2.26 Maximum allowable vertical center of gravity

The maximum vertical center of gravity of the vessel, corrected for free surface effect, which complies with the stipulated stability requirements for the draught in question.

2.27 Subdivision Length Ls

The subdivision length of the ship Ls is the greatest projected moulded length of that part of the ship at or below the deck or decks limiting the vertical extent of flooding with the ship at the deepest subdivision draught.

2.28 Deepest Subdivision Draught

The deepest subdivision draught is the waterline which corresponds to the Summer Load Line draught of the ship.

B. Intact Stability

1. General

Every passenger ship regardless of size and every cargo ship having a length, as defined in the International Convention on Load Lines in force, of 24 m and upwards shall be provided with a stability booklet, approved by **TL**, which contains sufficient information to enable the master to obtain accurate guidance as to the stability of the ship under varying conditions of service and to operate the ship in compliance with the applicable requirements. If a stability instrument is used as a supplement to the stability booklet for the purpose of determining compliance with the relevant stability criteria such instrument shall be subject to the approval by **TL**.

Evidence of approval by the Administration concerned may be accepted for the purpose of classification.

2. Standard Loading Conditions

Except as otherwise required by this subsection, for the purpose of assessing in general whether the stability criteria are met, stability curves using the assumptions given in this subsection should be drawn for the loading conditions intended by the owner in respect of the ship's operations.

If the owner of the ship does not supply sufficiently detailed information regarding such loading conditions, calculations should be made for the standard loading

conditions which are lightship, loading and ballast (ship in ballast in the departure condition, without cargo but with full stores and fuel and ship in ballast in the arrival condition, without cargo and with 10% stores and fuel remaining) conditions and ballast exchange at sea conditions, where applicable, upon which the approval of the hull scantlings is based.

In particular the following loading conditions should be included. **TL** shall require extra loading conditions where needed.

Note:
Care should be taken in the assessment of compliance with stability criteria, especially conditions in which liquid transfer operations might be expected or anticipated, to insure that the stability criteria is met at all stages of the voyage.

2.1 Passenger ships

2.1.1 Ship in the fully loaded departure condition with cargo, full stores and fuel and with the full number of passengers with their luggage.

2.1.2 Ship in the fully loaded arrival condition, with cargo, the full number of passengers and their luggage but with only 10% stores and fuel remaining.

2.1.3 Ship without cargo, but with full stores and fuel and the full number of passengers and their luggage.

2.1.4 Ship in the same condition as at above with only 10% stores and fuel remaining.

2.2 Cargo Ships, Container Ships, Roll-on/Roll-off and Refrigerated Carriers, Ore Carriers and Bulk Carriers

2.2.1 Ship in the fully loaded departure condition at maximum allowable draft, with cargo homogeneously distributed throughout all cargo spaces and with full stores and fuel;

2.2.2 Ship in the fully loaded arrival condition with cargo homogeneously distributed

2.2.3 Special loading conditions, e.g.

- Container or light load conditions at less than the maximum draught,
- Heavy cargo, empty holds or non-homogeneous cargo conditions
- Deck cargo conditions, etc., where applicable

2.2.4 Short voyage or harbour conditions, where applicable

2.2.5 Docking condition afloat

2.2.6 Loading and unloading transitory conditions, where applicable

Note: *Refer to Section 27 for further details related to Bulk Carrier and Ore Carriers.*

2.3 Oil Tankers:

2.3.1 Homogeneous loading conditions (excluding dry and clean ballast tanks) and ballast or part-loaded conditions for both departure and arrival.

2.3.2 Any specified non-uniform distribution of loading

2.3.3 Mid-voyage conditions relating to tank cleaning or other operations where these differ significantly from the ballast conditions

2.3.4 Docking condition afloat

2.3.5 Loading and unloading transitory conditions

2.4 Chemical Tankers:

2.4.1 Conditions as specified for oil tankers –

2.4.2 Conditions for high density or heated cargo

2.4.3 Segregated cargo where these are included in the approved cargo list

2.5 Liquefied Gas Carriers:

2.5.1 Homogeneous loading conditions for all approved cargoes for both arrival and departure

2.5.2 Cargo condition where one or more tanks are empty or partially filled or where more than one type of cargo having significantly different densities is carried, for both arrival and departure

2.5.3 Harbour condition for which an increased vapour pressure has been approved

2.5.4 Docking condition afloat

2.6 Combination Carriers:

- Conditions as specified in paragraph 2.2 and 2.3, above.

2.7 Cargo ships intended to carry deck cargoes

2.7.1 Ship in the fully loaded departure condition with cargo homogeneously distributed in the holds and with cargo specified in extension and mass on deck, with full stores and fuel.

2.7.2 Ship in the fully loaded arrival condition with cargo homogeneously distributed in holds and with a cargo specified in extension and mass on deck, with 10% stores and fuel.

2.8 Ships intended to carry timber deck cargoes

The loading conditions which should be considered for ships carrying timber deck cargoes are specified in 2.7. The stowage of timber deck cargoes should comply with the provisions of Chapter 3 of the Code of Safe Practice for Ships Carrying Timber Deck Cargoes, 1991 (Resolution A.1048(27)).

2.9 Offshore supply vessels

The standard loading conditions should be as follows:

2.9.1 Vessel in fully loaded departure condition with cargo distributed below deck and with cargo specified by position and weight on deck, with full stores and fuel, corresponding to the worst service condition in which all the relevant stability criteria are met.

2.9.2 Vessel in fully loaded arrival condition with cargo as specified in 2.9.1, but with 10% stores and fuel.

2.9.3 Vessel in the worst anticipated operating condition.

2.10 Fishing vessels

The standard loading conditions referred to in D.2 are as follows:

2.10.1 Departure conditions for the fishing grounds with full fuel, stores, ice, fishing gear, etc.

2.10.2 Departure from the fishing grounds with full catch and a percentage of stores, fuel, etc., as agreed by **TL**.

2.10.3 Arrival at home port with 10% stores, fuel, etc. remaining and full catch.

2.10.4 Arrival at home port with 10% stores, fuel, etc. and a minimum catch, which should normally be 20% of full catch but may be up to 40% provided **TL** is satisfied that operating patterns justify such a value.

2.11 Tugs and fire-fighting ships

In addition to the standard loading conditions defined in 2, at least the following loading cases are to be included in the trim and stability booklet:

- Ship in the departure condition at the waterline corresponding to the maximum assigned immersion, with full stores, provisions and consumables

- Same conditions as above, but with 10% stores and consumables.

2.12 Assumptions for calculating loading conditions

2.12.1 For the fully loaded conditions mentioned in 2.2.1, 2.2.2, 2.7.1 and 2.7.2 if a dry cargo ship has tanks for liquid cargo, the effective deadweight in the loading conditions therein described should be distributed according to two assumptions, i.e. with cargo tanks full, and with cargo tanks empty.

2.12.2 In the conditions mentioned in 2.1.1, 2.2.1 and 2.7.1 it should be assumed that the ship is loaded to its subdivision load line or summer load line or if intended to carry a timber deck cargo, to the summer timber load line with water ballast tanks empty.

2.12.3 If in any loading condition water ballast is necessary, additional diagrams should be calculated taking into account the water ballast. Its quantity and disposition should be stated.

2.12.4 In all cases, the cargo in holds is assumed to be fully homogeneous unless this condition is inconsistent with the practical service of the ship.

2.12.5 In all cases, when deck cargo is carried, a realistic stowage mass should be assumed and stated, including the height of the cargo.

2.12.6 Considering timber deck cargo the following assumptions are to be made for calculating the loading conditions referred to in 2.8:

2.12.6.1 The amount of cargo and ballast should correspond to the worst service condition in which all the relevant stability criteria of B.10.2 or the optional criteria given in C.3.2 are met. In the arrival condition, it should be assumed that the weight of the deck cargo has increased by 10% owing to water absorption.

2.12.7 For offshore supply vessels, the assumptions for calculating loading conditions should be as follows:

2.12.7.1 If a vessel is fitted with cargo tanks, the fully loaded conditions of 2.9.1 and 2.9.2 should be modified, assuming first the cargo tanks full and then the cargo tanks empty;

2.12.7.2 If in any loading condition water ballast is necessary, additional diagrams should be calculated, taking into account the water ballast, the quantity and disposition of which should be stated in the stability information;

2.12.7.3 In all cases when deck cargo is carried a realistic stowage weight should be assumed and stated in the stability information, including the height of the cargo and its centre of gravity;

2.12.7.4 Where pipes are carried on deck, a quantity of trapped water equal to a certain percentage of the net volume of the pipe deck cargo should be assumed in and around the pipes. The net volume should be taken as the internal volume of the pipes, plus the volume between the pipes. This percentage should be 30 if the freeboard amidships is equal to or less than 0.015 L and 10 if the freeboard amidships is equal to or greater than 0.03 L. For intermediate values of the freeboard amidships the percentage may be obtained by linear interpolation. In assessing the quantity of trapped water, the Administration may take into account positive or negative sheer aft, actual trim and area of operation; or

2.12.7.5 If a vessel operates in zones where ice accretion is likely to occur, allowance for icing should be made in accordance with the provisions of chapter 4 (Icing considerations).

2.12.8 For fishing vessels the assumptions for calculating loading conditions should be as follows:

2.12.8.1 Allowance should be made for the weight of the wet fishing nets and tackle, etc., on deck;

2.12.8.2 Allowance for icing, where this is anticipated to occur, should be made in accordance with the provisions of B.4.3;

2.12.8.3 In all cases the cargo should be assumed to be homogeneous unless this is inconsistent with practice;

2.12.8.4 In conditions referred to in 2.10.2 and 2.10.3 deck cargo should be included if such a practice is anticipated;

2.12.8.5 Water ballast should normally only be included if carried in tanks which are specially provided for this purpose.

3. Free Surface Effects and Corrections

3.1 For all loading conditions, the initial metacentric height and the righting lever curve should be corrected for the effect of free surfaces of liquids in tanks.

3.2 Free surface effects should be considered whenever the filling level in a tank is less than 98% of full condition. Free surface effects need not be considered where a tank is nominally full, i.e. filling level is 98% or above. Free surface effects for small tanks may be ignored under condition specified in 3.12. But nominally full cargo tanks should be corrected for free surface effects at 98% filling level. In doing so, the correction to initial metacentric height should be based on the inertia moment of liquid surface at 5° of heeling angle divided by displacement, and the correction to righting lever is suggested to be on the basis of real shifting moment of cargo liquids.

3.3 Tanks which are taken into consideration when determining the free surface correction may be in one of two categories:

3.3.1 Tanks with filling levels fixed (e.g., liquid cargo, water ballast). The free surface correction should be defined for the actual filling level to be used in each tank; or

3.3.2 Tanks with filling levels variable (e.g., consumable liquids such as fuel oil, diesel oil and fresh water, and also liquid cargo and water ballast during liquid transfer operations). Except as permitted in 3.5 and 3.6, the free surface correction should be the maximum value attainable between the filling limits envisaged for each tank, consistent with any operating instructions.

3.4 In calculating the free surface effects in tanks containing consumable liquids, it should be assumed that for each type of liquid at least one transverse pair or a single centerline tank has a free surface and the tank or combination of tanks taken into account should be those where the effect of free surfaces is the greatest.

3.5 Where water ballast tanks, including anti-rolling tanks and anti-heeling tanks, are to be filled or discharged during the course of a voyage, the free surface effects should be calculated to take account of the most onerous transitory stage relating to such operations.

3.6 For ships engaged in liquid transfer operations, the free surface corrections at any stage of the liquid transfer operations may be determined in accordance with the filling level in each tank at that stage of the transfer operation.

3.7 The corrections to the initial metacentric height and to the righting lever curve should be addressed separately as follows.

3.8 In determining the correction to initial metacentric height, the transverse moments of inertia of the tanks should be calculated at 0° angle of heel according to the categories indicated in 3.3.

3.9 The righting lever curve may be corrected by any of the following methods subject to the agreement of the Administration:

3.9.1 Correction based on the actual moment of fluid transfer for each angle of heel calculated; or

3.9.2 Correction based on the moment of inertia, calculated at 0° angle of heel, modified at each angle of heel calculated.

3.10 Corrections may be calculated according to the categories indicated in 3.2.

3.11 Whichever method is selected for correcting the righting lever curve, only that method should be presented in the ship's stability booklet. However, where an alternative method is described for use in manually calculated loading conditions, an explanation of the differences which may be found in the results, as well as an example correction for each alternative, should be included.

3.12 Small tanks which satisfy the following condition corresponding to an angle of inclination of 30°, need not be included in the correction:

$$\frac{M_{fs}}{\Delta_{min}} < 0.01 \quad [m]$$

where:

M_{fs} = Free surface moment [t.m],

Δ_{min} = Is the minimum ship displacement calculated at d_{min} [t],

d_{min} = Is the minimum mean service draught of the ship without cargo, with 10% stores and minimum water ballast, if required [m].

3.13 The usual remainder of liquids in empty tanks need not be taken into account in calculating the corrections, provided that the total of such residual liquids does not constitute a significant free surface effect.

4. Ice Accretion

4.1 General

For any ship operating in areas where ice accretion is likely to occur, adversely affecting a ship's stability, icing allowances should be included in the analysis of conditions of loading .

4.2 Cargo ships carrying timber deck cargoes

4.2.1 The master should establish or verify the stability of his ship for the worst service condition, having regard to the increased weight of deck cargo due to water absorption and/or ice accretion and to variations in consumables. (Refer to regulation 44(10) of the 1966 Load Line Convention and regulation 44(7) of the 1988 Load Line Protocol as amended.)

4.2.2 When timber deck cargoes are carried and it is anticipated that some formation of ice will take place, an allowance should be made in the arrival condition for the additional weight.

4.3 Fishing vessels

The calculations of loading conditions for fishing vessels should, where appropriate, include allowance for ice accretion, in accordance with the following provisions.

4.3.1 Allowance for ice accretion

Note:
Refer to regulation III/8 of the 1993 Torremolinos Protocol.

For vessels operating in areas where ice accretion is likely to occur, the following icing allowance should be made in the stability calculations:

4.3.1.1 30 kg per square meter on exposed weather decks and gangways.

4.3.1.2 7.5 kg per square meter for projected lateral area of each side of the vessel above the water plane.

4.3.1.3 The projected lateral area of discontinuous surfaces of rail, sundry booms, spars (except masts) and rigging of vessels having no sails and the projected lateral area of other small objects should be computed by increasing the total projected area of continuous surfaces by 5% and the static moments of this area by 10%.

Vessels intended for operation in areas where ice is known to occur should be:

4.3.1.4 Designed to minimize the accretion of ice.

4.3.1.5 Equipped with such means for removing ice as the Administration may require; for example, electrical and pneumatic devices, and/or special tools such as axes or wooden clubs for removing ice from bulwarks, rails and erections.

Note:
Refer to 2008 IS Code, Part B, 6.3.2 for icing regions and Part B, 6.3.3 for causes of ice formation and its influence upon the seaworthiness of the vessel.

4.4 Offshore supply vessels 24 m to 100 m in length

For vessels operating in areas where ice accretion is likely to occur:

4.4.1 No shutters should be fitted in the freeing ports; and

4.4.2 With regard to operational precautions against capsizing, reference is made to the recommendations for skippers of fishing vessels on ensuring a vessel's endurance in conditions of ice formation, as given in paragraph 6.3.3 and in Annex II of MSC. 267(85) (Recommendations for skippers of fishing vessels on ensuring a vessel's endurance in conditions of ice formation).

5. Permanent Ballast

If used, permanent ballast should be located in accordance with a plan approved by **TL** and in a manner that prevents shifting of position. Permanent ballast should not be removed from the ship or relocated within the ship without the approval of **TL**. Permanent ballast particulars should be noted in the ship's stability booklet.

6. Determination of Lightship Parameters

Every passenger ship regardless of size and every cargo ship having a length, as defined in the international Convention on Load Lines, 1966 or the protocol of 1988 relating thereto, as amended, as applicable, of 24 m and upwards, should be inclined upon its completion and the elements of its stability determined. For the details of an inclining test, refer to 2008 IS Code, Chapter 8 and Annex I

The inclining test or lightweight check is to be attended by a Surveyor of the **TL**.

The inclining test is adaptable to ships less than 24 m in length, provided that precautions are taken, on a case by case basis, to ensure the accuracy of the test procedure.

6.1 The following with regard to the condition of ship needs to be considered for the inclining test:

- The ship must be 98% complete
- Preferably one pair of slack tanks port/starboard or on center tank is permitted.
- Total weight of the liquids in tanks should not exceed 25% of the lightship weight
- A small initial list is acceptable but ideally this should not exceed 0.5 degree
- A deviation from design trim of up to 1% of L is normally acceptable when using hydrostatic data calculated at design trim
- Normally, the total value of missing weights should not exceed 2% and surplus weights, excluding liquid in tanks and test weights, no exceed 4% of the lightship displacement. For smaller vessels, higher percentages may be allowed.
- The total mass of test weights used is to be sufficient to provide a minimum heel angle of 1° and a maximum heel angle of 4° to each side, from upright.
- A minimum two pendulums are to be used; the use of three pendulums is recommended.

  The pendulums should be long enough to give a measured deflection, to each side of upright, of at least 15 cm. Generally, this will require a pendulum length of at least 3 m. It is recommended that pendulum lengths of 4 to 6 m be used on smaller ships, where there is insufficient headroom to hang long pendulums, the 15 cm deflection should be obtained by increasing the test weight so as to increase the heel.

  Refer to 2008 IS Code Chapter 8 and Annex I for further details

6.2 In case of a sister-ship, the following shall be taken into account:

- Type of vessel
- Time span of building
- Approved inclining test of the parent vessel
- The first ship of a series of sister ships built to the same approved plans for the classification purposes, under a single contract for construction.
- Ships of the same class and specifications typically built at the same shipyard

The Administration may allow the inclining test of an individual cargo ship to be dispensed with, provided basic stability data are available from the inclining test of a sister ship and it is shown to the satisfaction of the Administration that reliable stability information for the exempted ship can be obtained from such basic data, as defined in paragraph 1. Light weight survey shall be carried out upon completion and the ship shall be inclined whenever, in comparison with the data derived from the sister ship, a deviation from the lightship displacement exceeding 1% for ships of 160 m or more in length and 2% for ships of 50 m or less in length and as determined by linear interpolation for intermediate lengths or a deviation from the lightship longitudinal centre of gravity exceeding 0.5% of L_s is found.

Where the deviation is within these limits the actual lightship weight and longitudinal centre of gravity derived from the lightship check should be used in conjunction with the higher of either the lead ship's vertical centre of gravity or the calculated value. (Calculated value (VCG) must be corrected assuming the weight deviation at the most unfavourable position.)

If the differences between lightship particular for sister vessels are within 0.5% of lightship mass of first vessel and the difference in LCG is within 0.5% of L_s of first vessel, the lightship particulars of the first vessels in a series may be used for the sister vessel. Identical final stability documentation to that of the first vessel may then be accepted for the sister vessel. This will normally be accepted

6.3 The Administration may also allow the inclining test of an individual ship or class of ships especially designed for the carriage of liquids or ore in bulk to be dispensed with when reference to existing data for similar ships clearly indicates that, due to the ship's proportions and arrangements, more than sufficient metacentric height will be available in all probable loading conditions.

6.4 Where any alterations are made to a ship so as to materially affect the stability information supplied to the master, amended stability information shall be provided. If necessary the ship shall be re-inclined. The ship shall be re-inclined if anticipated deviations exceed one of the following values:

6.4.1 The deviation of lightship displacement should not exceed 2%,

6.4.2 The deviation of lightship longitudinal centre of gravity should not exceed 1% of the L_s of the ship.

7. List of Documents to be Submitted

The following documentation must be submitted to **TL** for approval:

- Preliminary stability booklet
- Inclining test report
- Final stability booklet

In case of a sister ship built from the same plans, lightweight survey procedure, lightweight survey report and final stability booklet are sufficient for evidence of adequate stability.

7.1 Preliminary stability booklet

TL requires the submission of provisional stability documentation for examination in advance. Preliminary stability booklet includes stability information for all possible loading conditions for that particular ship type

based on estimated lightship data.

7.2 Final stability booklet

Final stability booklet based on the results of the inclining test or the lightweight survey is to be submitted for approval.

If preliminary stability booklet has already been submitted and the difference between the estimated values of the lightship data and those obtained from the inclining test is less than:

- 2% for the displacement, and,
- 1% of the length between perpendiculars for the longitudinal position of the center of gravity and, the determined vertical position of the center of gravity is not greater than the previously estimated value,

TL reserves the right to accept the preliminary stability booklet as the final stability booklet.

8. Stability Booklet

8.1 Stability data and associated plans should be drawn up in the working language of the ship and any other language **TL** may require. Reference is also made to the International Safety Management (ISM) Code, adopted by the Organization by Resolution A.741(18). All translations of the stability booklet should be approved.

8.2 Each ship should be provided with a stability booklet, approved by **TL**, which contains sufficient information to enable the master to operate the ship in compliance with the applicable requirements contained in this Section. **TL** may have additional requirements. On a mobile offshore drilling unit, the stability booklet may be referred to as an operating manual. The stability booklet may include information on longitudinal strength. These Rules addresses only the stability related contents of the booklet (Refer to Regulation II-1/22 of the 1974 SOLAS Convention, as amended, Regulation 10 of the International Convention on Load Lines, 1966 or the Protocol of 1988 as amended, as applicable and Regulation III/10 of the 1993 Torremolinos Protocol. To ensure that ships are provided with meaningful information which accords with the sense of Regulation 10(2) a document containing such information is to be prepared on the basis of MSC Circular 920).

8.3 Ships carrying timber deck cargoes

8.3.1 Comprehensive stability information should be supplied which takes into account timber deck cargo. Such information should enable the master, rapidly and simply, to obtain accurate guidance as to the stability of the ship under varying conditions of service. Comprehensive rolling period tables or diagrams have proved to be very useful aids in verifying the actual stability conditions (Refer to Regulation II-1/22 of the 1974 SOLAS Convention, as amended, and Regulation 10(2) of the International Convention on Load Lines, 1966 or the Protocol of 1988 as amended, as applicable.

8.3.2 The Administration may deem it necessary that the master be given information setting out the changes in deck cargo from that shown in the loading conditions, when the permeability of the deck cargo is significantly different from 25%.

8.3.3 Conditions should be shown indicating the maximum permissible amount of deck cargo having regard to the lightest stowage rate likely to be met in service.

8.4 The format of the stability booklet and the information included will vary dependent on the ship type and operation. In developing the stability booklet, consideration should be given to including the following information (Refer to 2008 IS Code and MSC Circular 920 for further details):

8.4.1 A general description of the ship including;

- Ship’s name and type/purpose of ship;
- Name of builder and yard number;
- Date of build/conversion (keel laying or delivery);
- Particulars of classification;

- Nationality, port of registry and official number;
- Principal dimensions;
- Minimum recommended draught at FP
- Other information, if deemed necessary; and
- IMO Number.

8.4.2 Instructions on the use of the booklet.

8.4.3 General arrangement plans showing watertight compartments, closures, vents, down-flooding angles, permanent ballast, allowable deck loadings and freeboard diagrams.

8.4.4 Hydrostatic curves or tables and cross curves of stability calculated on a free-trimming basis, for the ranges of displacement and trim (where the operational trim range exceeds +/- 0.5% of *Ls*.) anticipated in normal operating conditions.

8.4.5 Capacity plan or tables showing capacities and centers of gravity for each cargo stowage space.

8.4.6 Tank sounding tables showing capacities, centers of gravity, and free surface data for each tank.

8.4.7 Information on loading restrictions,

- Maximum allowable load on double bottom,
- Maximum specific gravity allowed in liquid cargo tanks,
- Maximum filling level or percentage in liquid cargo tanks,
- Curves or tables of minimum operational metacentric height (GM) versus draught which assures compliance with the relevant intact and damage stability requirements (those limiting curves shall extend over the full range of operational trims), alternatively corresponding curves or tables of the maximum allowablevertical centre of gravity (KG) versus draught, or with the equivalents of either of these curves), when applicable

8.4.8 Standard operating conditions and examples for developing other acceptable loading conditions using the information contained in the stability booklet.

8.4.9 A brief description of the stability calculations done including assumptions.

8.4.10 General precautions for preventing unintentional flooding.

8.4.11 Information concerning the use of any special cross-flooding fittings with descriptions of damage conditions which may require cross-flooding.

8.4.12 Any other necessary guidance for the safe operation of the ship under normal and emergency conditions.

8.4.13 A table of contents and index for each booklet.

8.4.14 Inclining test report for the ship, or:

8.4.14.1 Where the stability data is based on a sister ship, the inclining test report of that sister ship along with the lightship measurement report for the ship in question; or

8.4.14.2 Where lightship particulars are determined by other methods than from inclining of the ship or its sister, a summary of the method used to determine those particulars.

8.4.15 Recommendation for determination of ship's stability by means of an in-service inclining test.

8.4.16 Specification of stability criteria taken for stability assessment and the ship stability short characteristics.

8.4.17 Guidance on loading, weather and other restrictions associated with design features or ship's operation, necessary to ensure the safety of the ship as regards stability. The stability booklet should contain a note for the master to avoid initial heel greater than 1

degree. A steady heeling angle may have major influence to the stability of the vessel especially in case of damage.

8.4.18 Instructions concerning the proper operation of anti-rolling devices and antiheeling system in port, as well as information on operational limits associated with the use of these arrangements and systems.

8.4.19 Plan of permanent ballast, where provided.

8.5 As an alternative to the stability booklet mentioned in 8.1, a simplified booklet in an approved form containing sufficient information to enable the master to operate the ship in compliance with the applicable provisions of the criteria as may be provided at the discretion of the Administration concerned.

9 Calculation of Stability Curves

9.1 General

Hydrostatic and stability curves should be prepared for the trim range of operating loading conditions taking into account the change in trim due to heel (free trim hydrostatic calculation). The calculations should take into account the volume to the upper surface of the deck sheathing. Furthermore, appendages and sea chests need to be considered when calculating hydrostatics and cross curves of stability. In the presence of port-starboard asymmetry, the most unfavourable righting lever curve should be used.

9.2 Superstructures, deckhouses, etc., which may be taken into account

9.2.1 Enclosed superstructures complying with regulation 3(10)(b) of the 1966 Load Line Convention and 1988 Protocol as amended may be taken into account.

9.2.2 Additional tiers of similarly enclosed superstructures may also be taken into account. As guidance windows (pane and frame) that are considered without deadlights in additional tiers above the second tier if considered buoyant should be designed with strength to sustain a safety margin (As a guidance for the Administrations a safety margin of 30% should be applied) with regard to the required strength of the surrounding structure.

9.2.3 Deckhouses on the freeboard deck may be taken into account, provided that they comply with the conditions for enclosed superstructures laid down in regulation 3(10)(b) of the 1966 Load Line Convention and 1988 Protocol relating thereto, as amended.

9.2.4 Where deckhouses comply with the above conditions, except that no additional exit is provided to a deck above, such deckhouses should not be taken into account; however, any deck openings inside such deckhouses should be considered as closed even where no means of closure are provided.

9.2.5 Deckhouses, the doors of which do not comply with the requirements of regulation 12 of the 1966 Load Line Convention and 1988 Protocol as amended should not be taken into account; however, any deck openings inside the deckhouse are regarded as closed where their means of closure comply with the requirements of regulations 15, 17 or 18 of the 1966 Load Line Convention and 1988 Protocol as amended.

9.2.6 Deckhouses on decks above the freeboard deck should not be taken into account, but openings within them may be regarded as closed.

9.2.7 Superstructures and deckhouses not regarded as enclosed can, however, be taken into account in stability calculations up to the angle at which their openings are flooded (at this angle, the static stability curve should show one or more steps, and in subsequent computations the flooded space should be considered non-existent).

9.2.8 In cases where the ship would sink due to flooding through any openings, the stability curve should be cut short at the corresponding angle of flooding and the ship should be considered to have entirely lost its stability.

9.2.9 Small openings such as those for passing wires or chains, tackle and anchors, and also holes of scuppers, discharge and sanitary pipes should not be considered as open if they submerge at an angle of inclination more than 30°. If they submerge at an angle

of 30° or less, these openings should be assumed open if the Administration considers this to be a source of significant flooding.

9.2.10 Trunks may be taken into account. Hatchways may also be taken into account having regard to the effectiveness of their closures.

9.3 Calculation of stability curves for ships carrying timber deck cargoes In addition to the provisions given above, the Administration may allow account to be taken of the buoyancy of the deck cargo assuming that such cargo has a permeability of 25% of the volume occupied by the cargo. Additional curves of stability may be required if the Administration considers it necessary to investigate the influence of different permeabilities and/or assumed effective height of the deck cargo.

10. General Criteria

10.1 General

10.1.1 All criteria shall be applied for all conditions of loading as set out in item B.2

10.1.2 Free surface effects (B.3) shall be accounted for in all conditions of loading as set out in item B.2.

10.1.3 Where anti-rolling devices are installed in a ship, the Administration shall be satisfied that the criteria can be maintained when the devices are in operation and that failure of power supply or the failure of the device(s) will not result in the vessel being unable to meet the relevant provisions of this subsection.

10.1.4 A number of influences such as icing of topsides, water trapped on deck, etc., adversely affect stability and the Administration is advised to take these into account, so far as is deemed necessary.

10.1.5 Provisions shall be made for a safe margin of stability at all stages of the voyage, regard being given to additions of weight, such as those due to absorption of water and icing (details regarding ice accretion are given in B.4 Ice accredition) and to losses of weight such as those due to consumption of fuel and stores.

10.1.6 If curves or tables of minimum operational metacentric height (GM) or maximum centre of gravity (VCG) are used to ensure compliance with the relevant intact stability criteria those limiting curves shall extend over the full range of operational trims, unless the Administration agrees that trim effects are not significant. When curves or tables of minimum operational metacentric height (GM) or maximum centre of gravity (VCG) versus draught covering the operational trims are not available, the master must verify that the operating condition does not deviate from a studied loading condition, or verify by calculation that the stability criteria are satisfied for this loading condition taking into account trim effects.

10.2 General Intact Stability Criteria Based on GZ Curve

10.2.1 The area under the righting lever curve (GZ curve) shall not be less than 0.055 meter-radians up to ϕ = 30° angle of heel and not less than 0.09 meter radians up to ϕ = 40° or the angle opf down-flooding ϕ_f , if this angle is less than 40°. Additionally, the area under the GZ curve between the angles of heel of 30° and 40° or between 30° and ϕ_f, if this angle is less than 40°, shall not be less than 0.03 meter-radians.

10.2.2 The righting lever GZ shall be at least 0.2 m at an angle of heel equal to or greater than 30°.

10.2.3 The maximum righting lever shall occur at an angle of heel not less than 25°. When the righting lever curve has a shape with two maximums, the first is to be located at a heel angle not less than 25°

For certain ships the requirement contained in the above paragraph may not be practicable. Such ships are typically of wide beam and small depth, indicatively B/D ≥ 2.5. For such ships Administrations may apply the following alternative criteria:

10.2.3.1 The maximum righting lever (GZ) should occur at an angle of heel not less than 15°;
and

10.2.3.2 The area under the curve of righting levers (GZ curve) should not be less than 0.070 metre-radians

up to an angle of 15° when the maximum righting lever (GZ) occurs at 15° and 0.055 metre-radians up to an angle of 30° when the maximum righting lever (GZ) occurs at 30° or above. Where the maximum righting lever (GZ) occurs at angles of between 15° and 30°, the corresponding area under the righting lever curve should be:

$$0.055 + 0.001\,(30° - \phi_{max}) \text{ metre-radians.}$$

10.2.4 The initial metacentric height GM_0 shall not be less than 0.15 m.

11. Severe Wind and Rolling Criterion (Weather Criterion)

11.1 The ability of a ship to withstand the combined effects of beam wind and rolling shall be demonstrated, with reference to the Figure 26.1 as follows:

11.1.1 The ship is subjected to a steady wind pressure acting perpendicular to the ship's centerline which results in a steady wind heeling lever (l_{w1}).

11.1.2 From the resultant angle of equilibrium (φ_0), the ship is assumed to roll owing to wave action to an angle of roll (φ_1) to windward. The angle of heel under action of steady wind (φ_0) should not exceed 16° or 80% of the angle of deck edge immersion, whichever is less.

11.1.3 The ship is then subjected to a gust wind pressure which results in a gust wind heeling lever (l_{w2}).

11.1.4 Under these circumstances, **area b** shall be equal to or greater than **area a**, as indicated in Figure 26.1 below:

where the angles in Figure 26.1 are defined as follows:

φ_0 = Angle of heel under action of steady wind,

φ_1 = Angle of roll to windward due to wave action,

φ_2 = Angle of down-flooding (ϕ_f) or 50° or ϕ_c, whichever is less.

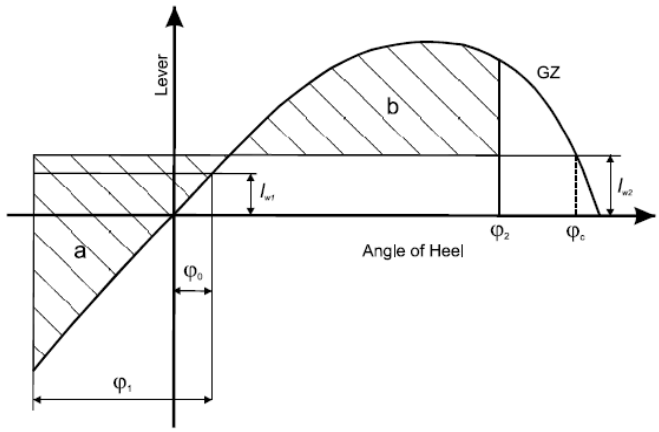

Figure 26.1 Severe wind and rolling

where:

φ_f = Angle of heel at which openings in the hull, superstructures or deckhouses which cannot be closed weathertight immerse. In applying this criterion, small openings through which progressive flooding cannot take place need not be considered as open,

φ_c = Angle of second intercept between wind heeling lever l_{w2} and GZ curve.

11.2 The wind heeling levers l_{w1} and l_{w2} are constant values at all angles of inclination and shall be calculated as follows:

$$l_{w1} = \frac{P \cdot A \cdot Z}{1000 \cdot g \cdot \Delta} \quad [m]$$

$$l_{w2} = 1.5 \cdot l_{w1} \quad [m]$$

where:

P = Wind pressure of 504 Pa. The value of P used for ships in restricted service may be reduced subject to the approval of the Administration,

A = Projected lateral area of the portion of the ship and deck cargo above the waterline [m^2],

Z = Vertical distance from the center of A to the center of the underwater lateral area or approximately to a point at one half the mean draught [m],

Δ = Displacement [t],

g = Gravitational acceleration of 9.81 m/s^2.

11.3 Alternative means for determining the wind heeling lever (l_{w1}) may be accepted, to the satisfaction of the Administration as an equivalent to calculation in 11.2 When such alternative tests are carried out, reference shall be made based on "Interim Guidelines for alternative assessment of the weather criterion (MSC.1/Circ.1200)". The wind velocity used in the tests shall be 26 m/s in full scale with uniform velocity profile. The value of wind velocity used for ships in restricted services may be reduced to the satisfaction of the Administration.

11.4 The angle of roll (φ_1) shall be calculated as follows:

$$\varphi_1 = 109 \cdot k \cdot X_1 \cdot X_2 \cdot \sqrt{r \cdot s} \quad [\text{degrees}]$$

where:

X_1 = Factor as shown in Table 26.1.

X_2 = Factor as shown in Table 26.2.

k = Factor as follows:

k = 1.0 for round-bilged ship having no bilge or bar keels.

k = 0.7 for a ship having sharp bilges.

k = As shown in Table 26.3 for a ship having bilge keels, a bar keel or both.

$$r = 0.73 + 0.6\ OG/d$$

with:

$$OG = KG - d$$

d = Mean moulded draught of the ship [m].

s = Factor as shown in Table 26.4, where T is the ship roll natural period.

In absence of sufficient information, the following approximate formula can be used:

Rolling period;

$$T = \frac{2 \cdot C \cdot B}{\sqrt{GM}} \quad [s]$$

where:

$$C = 0.373 + 0.023\ (B/d) - 0.043\ (L_{WL} / 100)$$

The symbols in Tables 26.1, 26.2, 26.3 and 26.4 and the formula for the rolling period are defined as follows:

L_{WL} = Length of the ship at waterline [m].

B = Moulded breadth of the ship [m].

d = Mean moulded draught of the ship [m].

C_B = Block coefficient .

A_k = Total overall area of bilge keels, or area of the lateral projection of the bar keel, or sum of these areas [m²].

GM = Metacentric height corrected for free surface effect [m].

Intermediate values in these Tables shall be obtained by linear interpolation.

Note:

The angle of roll for ships with anti-rolling devices should be determined without taking into account the operation of these devices unless the Administration is satisfied with the proof that the devices are effective even with sudden shutdown of their supplied power.

Table 26.1 Values of X_1

B/d	X_1
<= 2.4	1.00
2.5	0.98
2.6	0.96
2.7	0.95
2.8	0.93
2.9	0.91
3.0	0.90
3.1	0.88
3.2	0.86
3.3	0.84
3.4	0.82
>= 3.5	0.80

Table 26.2 Values of X_2

C_B	X_2
<=0.45	0.75
0.50	0.82
0.55	0.89
0.60	0.95
0.65	0.97
>=0.70	1.00

Table 26.3 Values of k

$(A_k \cdot 100 / L_{WL} \cdot B)$	k
0.0	1.00
1.0	0.98
1.5	0.95
2.0	0.88
2.5	0.79
3.0	0.74
3.5	0.72
>= 4.0	0.70

11.5 The Tables and formulae described in 11.4 are based on data from ships having:

11.5.1 B/d smaller than 3.5

11.5.2 (KG/d-1) between -0.3 and 0.5

Table 26.4 Values of s

T_1	s
<=6	0.100
7	0.098
8	0.093
12	0.065
14	0.053
16	0.044
18	0.038
>=20	0.035

11.5.3 T smaller than 20 s.

For ships with parameters outside of the above limits the angle of roll (φ_1) may be determined with model experiments of a subject ship with the procedure described in MSC.1/Circ.1200 as the alternative. In addition, the Administration may accept such alternative determinations for any ship, if deemed appropriate.

C. Additional Criteria for Certain Types of Ships

Additional stability requirements for certain ship types are outlined in this Item. For those ships which are not mentioned herein, reference regarding stability shall be made relevant codes and conventions of SOLAS.

1. Passenger Ships

Passenger ships shall comply with the requirements of B.10.2 and B.11 in addition;

1.1 The angle of heel on account of crowding of passengers to one side as defined below shall not exceed 10°.

1.1.1 A minimum weight of 75 kg shall be assumed for each passenger except that this value may be increased subject to the approval of the Administration In addition, the mass and distribution of the luggage shall be approved by the Administration.

1.1.2 The height of the center of gravity for passengers shall be assumed equal to:

1.1.2.1 1 m. Above deck level for passengers standing upright. Account may be taken, if necessary, of camber and sheer of deck.

1.1.2.2 0.3 m. Above the seat in respect of seated passengers.

1.1.2.3 Passengers and luggage shall be considered to be in the spaces normally at their disposal, when assessing compliance with the criteria given in B.10.2.

1.1.3 Passengers without luggage shall be considered as distributed to produce the most unfavorable combination of passenger heeling moment and/or initial metacentric height, which may be obtained in practice, when assessing compliance with the criteria given in 1.1 and 1.2, respectively. In this connection, a value higher than four persons per square meter is not necessary.

1.2 In addition, the angle of heel on account of turning shall not exceed 10° when calculated using the following formula:

$$M_R = 0.200 \cdot \frac{v_0^2}{L_{WL}} \cdot \Delta \cdot \left(KG - \frac{d}{2} \right)$$

where:

M_R = Heeling moment [kN.m],

v_o = Service speed [m/s],

L_{WL} = Length of ship at waterline [m],

Δ = Displacement [t],

d = Mean draught [m],

KG = Height of center of gravity above baseline [m].

2. Oil Tankers of 5000 DWT and Above

Oil tankers of 5000 tonnes deadweight and upwards shall comply with the the requirements of Section 28, D.

3. Cargo Ships Carrying Timber Deck Cargoes

Cargo ships carrying timber deck cargoes shall comply with the requirements of B.10.2 and B.11 unless **TL** is satisfied with the application of alternative provision 3.2.

3.1 Scope

The provisions given hereunder apply to all ships of 24 m in length and over engaged in the carriage of timber deck cargoes. Ships that are provided with, and make use of, their timber load line shall also comply with the requirements of Regulations 41 to 45 of the 1966 Load Line Convention.

3.2 Alternative stability criteria

For ships loaded with timber deck cargoes and provided that the cargo extends longitudinally between superstructures (where there is no limiting superstructure at the after end, the timber deck cargo shall extend at least to the after end of the aftermost hatchway) transversely for the full beam of ship, after due allowance for a rounded gunwale, not exceeding 4% of the breadth of the ship and/or securing the supporting uprights and which remains securely fixed at large angles of heel may be : (Refer to Regulation 44(2) of the International Convention on Load Lines, 1966 or the Protocol of 1988 relating thereto as amended, as applicable):

3.2.1 The area under the righting lever curve (GZ curve) shall not be less than 0.08 meter-radians up to ϕ = 40° or the angle of flooding if this angle is less than 40°.

3.2.2 The maximum value of the righting lever (GZ) shall be at least 0.25 m.

3.2.3 At all times during a voyage, the metacentric height GM_0 shall not be less than 0.1 m, taking into account the absorption of water by the deck cargo and/or ice accretion on the exposed surfaces.

3.2.4 When determining the ability of the ship to withstand the combined effects of beam wind and rolling

according to B.11 , the 16° limiting angle of heel under action of steady wind shall be complied with, but the additional criterion of 80% of the angle of deck edge immersion may be ignored.

4. Cargo Ships Carrying Grain in Bulk

The intact stability of ships engaged in the carriage of grain shall comply with the requirements of the International Code for the Safe Carriage of Grain in Bulk adopted by Resolution MSC.23(59).

5. High-speed Craft

High-speed craft, constructed on or after 1 January 1996, to which Chapter X of the 1974 SOLAS Convention applies, shall comply with stability requirements of the 1994 HSC Code (Resolution MSC.36(63)). Any high-speed craft to which Chapter X of the 1974 SOLAS Convention applies, irrespective of its date of construction, which has undergone repairs, alterations or modifications of major character; and a high-speed craft constructed on or after 1 July 2002, shall comply with stability requirements of the 2000 HSC Code (Resolution MSC.97(73) including the amendments adopted at its 79th session in December 2004, through Resolution MSC.175(79) and at its 82nd session in December 2006, through Resolution MSC.222(82))

D. Recommended Criteria for Certain Types of Ships

1. General

1.1 Purpose

The purpose of this Item is to:

1.1.1 Recommend stability criteria and other measures for ensuring the safe operation of certain types of ships to minimize the risk to such ships, to the personnel on board and to the environment.

1.1.2 Provide guideline for stability information, operational provisions against capsizing, icing considerations, considerations for watertight integrity and the determination of lightship parameters.

1.2 Application

1.2.1 This part contains recommended intact stability criteria for certain types of ships and other marine vehicles not included in the above-mentioned mandatory requirements.

1.2.2 **TL** may impose additional requirements regarding the design aspects of ships of novel design or ships not otherwise covered within.

1.2.3 The criteria stated in this part should give guidance to Administrations if no national requirements are applied.

2. Fishing Vessels

The provisions given hereunder apply to decked seagoing fishing vessels as defined in definitions. The stability criteria given in 2.2 and 2.3 below should be complied with for all conditions of loading as specified in B.2.10, unless **TL** is satisfied that operating experience justifies departures there from.

2.1 General precautions against capsizing

Apart from general precautions referred to in G.1, G.2 and G.3, the following measures should be considered as preliminary guidance on matters influencing safety as related to stability:

2.1.1 All fishing gear and other heavy material should be properly stowed and placed as low in the vessel as possible;

2.1.2 Particular care should be taken when pull from fishing gear might have a negative effect on stability, e.g., when nets are hauled by power-block or the trawl catches obstructions on the sea-bed. The pull of the fishing gear should be from as low a point on the vessel, above the waterline, as possible;

2.1.3 Gear for releasing the deck load in fishing vessels which carry the catch on deck, e.g., herring, should be kept in good working condition;

2.1.4 When the main deck is prepared for carrying deck load by dividing it with pound boards, there should be slots between them of suitable size to allow easy flow of water to freeing ports, thus preventing trapping of water;

2.1.5 To prevent a shift of the fish load carried in bulk, portable divisions in the holds should be properly installed;

2.1.6 Reliance on automatic steering may be dangerous as this prevents changes to course which may be needed in bad weather;

2.1.7 Necessary care should be taken to maintain adequate freeboard in all loading conditions, and where load line regulations are applicable they should be strictly adhered to at all times; and

2.1.8 Particular care should be taken when the pull from fishing gear results in dangerous heel angles. This may occur when fishing gear fastens onto an underwater obstacle or when handling fishing gear, particularly on purse seiners, or when one of the trawl wires tears off. The heel angles caused by the fishing gear in these situations may be eliminated by employing devices which can relieve or remove excessive forces applied through the fishing gear. Such devices shoul not impose a danger to the vessel through operating in circumstances other than those for which they were intended.

2.2 Recommended general criteria

2.2.1 The general intact stability criteria given in B.10.2.1 to 10.2.3 should apply to fishing vessels having a length of 24 m and over, with the exception of requirements on the initial metacentric height GM, (B.10.2.4) which for fishing vessels should not be less than 0.35 m for single-deck vessels. In vessels with complete superstructure or vessels of 70 m in length and over the metacentric height may be reduced to the satisfaction of the Administration but in no case should be less than 0.15 m. For further details refer to Regulation III/2 of the 1993 Torremolinos Protocol.

2.2.2 Where arrangements other than bilge keels are provided to limit the angle of roll, the Administration should be satisfied that the stability criteria referred to in 2.2.1 above are maintained in all operating conditions.

2.3 Severe wind and rolling criterion (weather criterion) for fishing vessels

2.3.1 **TL** may apply the provisions of B.11 to fishing vessels of 45 m length and over.

2.3.2 For fishing vessels in the length range between 24 m and 45 m, **TL** may apply the provisions of B.11. Alternatively the values of wind pressure (see B.11.2) may be taken from the following table:

h(m)	1	2	3	4	5	≥ 6
P(Pa)	316	386	429	460	485	504

where h is the vertical distance from the center of the projected vertical area of the vessel above the waterline, to the waterline.

2.4 Recommendation for an interim simplified stability criterion for decked fishing vessels under 30 m in length

2.4.1 For decked vessels with a length less than 30 m, the following approximate formula for the minimum metacentric height GM_{min} (in meters) for all operating conditions should be used as the criterion:

$$GM_{min} = 0.53 + 2B\left[0.075 - 0.37\left(\frac{f}{B}\right) + 0.82\left(\frac{f}{B}\right)^2\right.$$

where:

L = Is the length of the vessel on the waterline in maximum load condition [m],

l_s = Is the actual length of enclosed superstructure extending from side to side of the vessel [m].

B = Is the extreme breadth of the vessel on the waterline in maximum load condition [m],

D = Is the depth of the vessel measured vertically amidships from the base line to the top of the upper deck at side [m],

f = Is the smallest freeboard measured vertically from the top of the upper deck at side to the actual waterline [m].

The formula is applicable for vessels having:

2.4.1.1 f/B between 0.02 and 0.20.

2.4.1.2 l_s/L smaller than 0.60.

2.4.1.3 B/D between 1.75 and 2.15.

2.4.1.4 Sheer fore and aft at least equal to or exceeding the standard sheer prescribed in Regulation 38(8) of the International Convention on Load Lines, 1966 or the Protocol of 1988 as amended, as applicable.

2.4.1.5 Height of superstructure included in the calculation is not less than 1.8 m.

For ships with parameters outside the above limits the formula should be applied with special care.

2.4.2 The above formula is not intended as a replacement for the basic criteria given in 2.3 and 2.4 but is to be used only if circumstances are such that cross curves of stability, KM curve and subsequent GZ curves are not and cannot be made available for judging a particular vessel's stability.

2.4.3 The calculated value of GM, should be compared with actual GM values of the vessel in all loading conditions. If an inclining experiment based on estimated displacement, or another approximate method of determining the actual GM is used, a safety margin should be added to the calculated GM_{min}.

3. Pontoons

3.1 Application

The provisions given hereunder apply to seagoing pontoons. A pontoon is considered to be normally:

3.1.1 Non self-propelled.

3.1.2 Unmanned.

3.1.3 Carrying only deck cargo.

3.1.4 Having a block coefficient of 0.9 or greater.

3.1.5 Having a breadth/depth ratio of greater than 3.0.

3.1.6 Having no hatchways in the deck except small manholes closed with gasketed covers.

3.2 Stability drawings and calculations

The following information is typical of that required to be submitted to the Administration for approval:

3.2.1 Lines drawing;

3.2.2 Hydrostatic curves;

3.2.3 Cross curves of stability;

3.2.4 Report of draught and density readings and calculation of lightship displacement and longitudinal centre of gravity;

3.2.5 Statement of justification of assumed vertical centre of gravity; and

3.2.6 Simplified stability guidance such as a loading diagram, so that the pontoon may be loaded in compliance with the stability criteria.

3.3 Concerning the performance of calculations

The following guidance is suggested:

3.3.1 No account should be taken of the buoyancy of deck cargo (except buoyancy credit for adequately secured timber);

3.3.2 Consideration should be given to such factors as water absorption (e.g., timber), trapped water in cargo (e.g., pipes) and ice accretion;

3.3.3 In performing wind heel calculations:

3.3.3.1 The wind pressure should be constant and for

general operations be considered to act on a solid mass extending over the length of the cargo deck and to an assumed height above the deck;

3.3.3.2 The centre of gravity of the cargo should be assumed at a point mid-height of the cargo; and

3.3.3.3 The wind lever should be taken from the centre of the deck cargo to a point at one half the mean draught;

3.3.4 Calculations should be performed covering the full range of operating draughts; and

3.3.5 The down-flooding angle should be taken as the angle at which an opening through which progressive flooding may take place is immersed. This would not be an opening closed by a watertight manhole cover or a vent fitted with an automatic closure.

3.4 Intact stability criteria

3.4.1 The area under the righting lever curve up to the angle of maximum righting lever should not be less than 0.08 meter-radians.

3.4.2 The static angle of heel due to a uniformly distributed wind load of 540 Pa (wind speed 30 m/s) should not exceed an angle corresponding to half the freeboard for the relevant loading condition, where the lever of wind heeling moment is measured from the centroid of the windage area to half the draught.

3.4.3 The minimum range of stability should be:

For L ≤ 100 m	20°
For L ≥ 150 m	15°
For 100<L<150	by interpolation.

3.5 Additional intact stability criteria for ships with service notation “pontoon - crane”

3.5.1 Application

The requirements of this item apply to ships with the service notation pontoon - crane and specify the criteria these ships are to satisfy during cargo lifting in addition to those in item 3.4

3.5.2 Intact stability criteria during cargo lifting

The following intact stability criteria are to be complied with:

- $\theta_C \leq 15°$
- $GZ_C \leq 0.6\ GZ_{MAX}$
- $A_1 \geq 0.4\ A_{TOT}$

where:

θ_C = Heeling angle of equilibrium, corresponding to the first intersection between heeling and righting arms (see Figure 26.2)

GZ_C = Defined in Figure 26.2

GZ_{MAX} = Defined in Figure 26.2

A_1 = Area, in m.rad, contained between the righting lever and the heeling arm curves, measured from the heeling angle θ_C to the heeling angle equal to the lesser of:

- heeling angle θ_R of loss of stability, corresponding to the second intersection between heeling and righting arms (see Figure 26.2)
- down-flooding angle θ_F, corresponding to flooding of unprotected openings (see Figure 26.2)

A_{TOT} = Total area, in m.rad, below the righting lever curve.

In the above formula, the heeling arm, corresponding to the cargo lifting, is to be obtained, in m, from the following formula:

$$b = \frac{Pd - Zz}{\Delta}$$

where:

P = Cargo lifting mass, in t

d = Transversal distance, in m, of lifting cargo to the longitudinal plane (see Figure 26.2)

Z = Mass, in t, of ballast used for righting the pontoon, if applicable (see Figure 26.2)

z = Transversal distance, in m, of the centre of gravity of Z to the longitudinal plane (see Figure 26.2)

Δ = Displacement, in t, at the loading condition considered.

The above check is to be carried out considering the most unfavourable situations of cargo lifting combined with the lesser initial metacentric height GM, corrected according to the requirements in B.3.

The residual freeboard of the unit during lifting operations in the most unfavourable stability condition is to be not less than 0.30 m. However, the heeling of the unit is not to produce in the lifting devices higher loads than those envisaged by the Manufacturer, generally expected to be 5° in the boom plane and 2° transversally in the case of a crane.

The vertical position of the centre of gravity of cargo lifting is to be assumed in correspondence of the suspension point.

3.5.3 Intact stability criteria in the event of sudden loss of cargo during lifting

This additional requirement is compulsory when counterweights or ballasting of the ship are necessary or when deemed necessary by the Society taking into account the ship dimensions and the weights lifted.

The case of a hypothetical loss of cargo during lifting due to a break of the lifting cable is to be considered.

In this case, the following intact stability criteria are to be complied with:

- $\frac{A_2}{A_1} \geq 1$

- $\theta_2 - \theta_3 \geq 20°$

where:

A_1 = Area, in m.rad, contained between the righting lever and the heeling arm curves, measured from the heeling angle θ_1 to the heeling angle θ_C (see Figure 26.3),

A_2 = Area, in m.rad, contained between the righting lever and the heeling arm curves, measured from the heeling angle θ_C to the heeling angle θ_2 (see Figure 26.3)

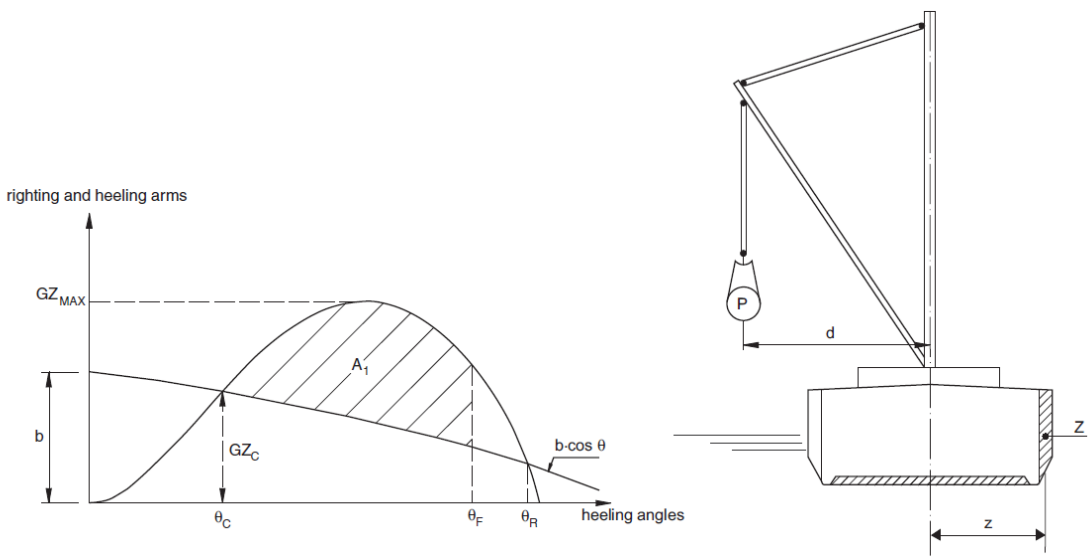

Figure 26.2 Cargo Lifting

A_3 = Area, in m.rad, contained between the righting lever and the heeling arm curves, measured from the heeling angle θ_C to the heeling angle θ_3 (see Figure 26.3)

θ_1 = Heeling angle of equilibrium during lifting (see Figure 26.3)

θ_2 = Heeling angle corresponding to the lesser of θ_R and θ_F

θ_C = Heeling angle of equilibrium, corresponding to the first intersection between heeling and righting arms (see Figure 26.3)

θ_3 = Maximum heeling angle due to roll, at which $A_3 = A_1$, to be taken not greater than 30° (angle in correspondence of which the loaded cargo on deck is assumed to shift (see Figure 26.3)

θ_R = Heeling angle of loss of stability, corresponding to the second intersection between heeling and righting arms (see Figure 26.3).

θ_F = Down-flooding angle at which progressive flooding may occur (see Figure 26.3)

In the above formulae, the heeling arm, induced on the ship by the cargo loss, is to be obtained, in m, from the following formula:

$$b = \frac{Zz}{\Delta}\cos\theta$$

where Z, z and Δ are defined in item 3.5.2.

4. Containerships Greater than 100 m

4.1 Application

These requirements apply to containerships greater than 100 m in length as defined in Definitions. They may also be applied to other cargo ships in this length range with considerable flare or large water plane areas. Administration may apply the following criteria instead of those in B.10.2.

Note: Since the criteria in this section were empirically developed with the data of containerships less than 200 m in length, they should be applied to ships beyond such limits with special care.

4.2 Intact stability

4.2.1 The area under the righting lever curve (GZ curve) should not be less than 0.009/C meter-radians up to ϕ = 30° angle of heel, and not less than 0.016/C meter-radians up to ϕ = 40° or the angle of flooding ϕ_f (as defined in B.10.2) if this angle is less than 40°.

4.2.2 Additionally, the area under the righting lever curve (GZ curve) between the angles of heel of 30° and 40° or between 30° and ϕ_f, if this angle is less than 40°, should not be less than 0.006/C meter-radians.

4.2.3 The righting lever GZ should be at least 0.033/C m at an angle of heel equal or greater than 30°.

4.2.4 The maximum righting lever GZ should be at least 0.042/C m.

4.2.5 The total area under the righting lever curve (GZ curve) up to the angle of flooding ϕ_f should not be less than 0.029/C meter-radians.

4.2.6 In the above criteria the form factor C should be calculated using the formula and Figure 26.4:

$$C = \frac{d \cdot D'}{B_m^2}\sqrt{\frac{d}{KG}}\left(\frac{C_B}{C_W}\right)^2\sqrt{\frac{100}{L}}$$

where:

d = Mean draught [m],

D' = Moulded depth of the ship, corrected for defined parts of volumes within the hatch coamings according to the formula:

$$D' = D + h\left(\frac{2b - B_D}{B_D}\right)\left(\frac{2\sum l_H}{L}\right)$$

as defined in Figure 26.4;

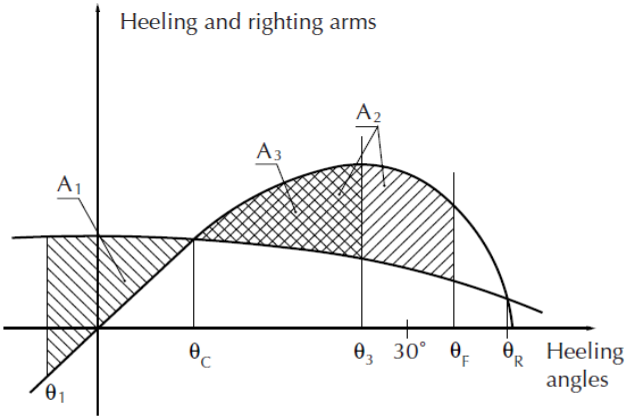

A_1: Area between θ_1 and θ_C
A_2: Area between θ_C and θ_2 (in the figure $\theta_2 = \theta_F$)
A_3: Area between θ_C and θ_3
$A_3 = A_1$

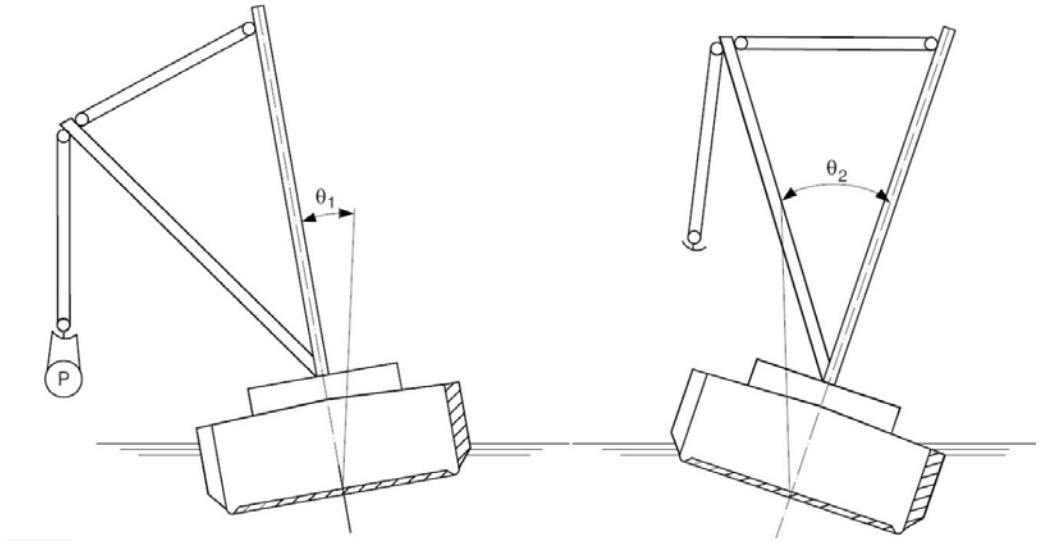

Figure 26.3 Cargo loss

D = Moulded depth of the ship [m],

B_D = Moulded breadth of the ship [m],

KG = Height of the center of mass above base, corrected for free surface effect, not be taken as less than d [m],

C_B = Block coefficient.

C_W = Water plane coefficient.

l_H = Length of each hatch coaming within L/4 forward and aft from amidships [m],

b = Mean width of hatch coamings within L/4 forward and aft from amidships [m],

h = Mean height of hatch coamings within L/4 forward and aft from amidships [m],

L = Length of the ship [m],

B = Breadth of the ship on the waterline [m],

B_m = Breadth of the ship on the waterline at half mean draught [m].

The shaded areas in Figure 26.4 represent partial volumes within the hatch coamings considered contributing to resistance against capsizing at large heeling angles when the ship is on a wave crest.

4.2.7 The use of electronic loading and stability instrument is encouraged in determining the ship's trim and stability during different operational conditions.

5. Offshore Supply Vessels

5.1 Application

5.1.1 The provisions given hereunder apply to offshore supply vessels, as defined in Definitions, of 24 m in length and over. The alternative stability criteria contained in 5.5 below apply to vessels of not more than 100 m. in length.

5.1.2 For a vessel engaged in near-coastal voyages, as defined in Definitions, the principles given in 5.2 should guide the Administration in the development of its national standards. Relaxations from the requirements may be permitted by the Administration for vessels engaged in near-coastal voyages off its own coasts provided the operating conditions are, in the opinion of the Administration, such, as to render compliance with the provisions of the criteria unreasonable or unnecessary.

5.1.3 Where a ship other than an offshore supply vessel, as defined in Definitions, is employed on a similar service, the Administration should determine the extent to which compliance with the provisions of the criteria is required.

5.2 Principles governing near-coastal voyages

5.2.1 The Administration defining near-coastal voyages for the purpose of the criteria outlined herein should not impose design and construction standards for a vessel entitled to fly the flag of another State and engaged in such voyages in a manner resulting in a more stringent standard for such a vessel than for a vessel entitled to fly its own flag. In no case should the Administration impose, in respect of a vessel entitled to fly the flag of another State, standards in excess of the **criteria** for a vessel not engaged in near-coastal voyages.

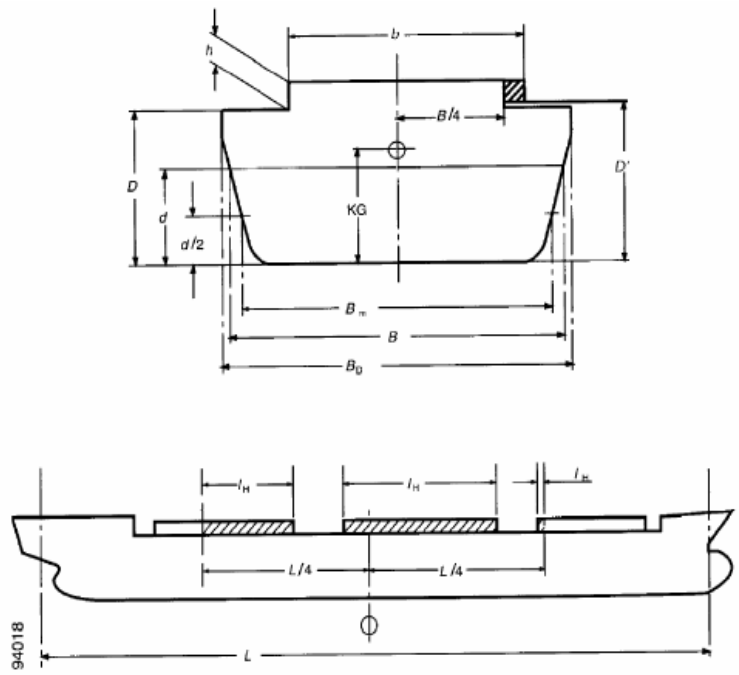

Figure 26.4

5.2.2 With respect to a vessel regularly engaged in near-coastal voyages off the coast of another State Administration should prescribe design and construction standards for such a vessel at least equal to those prescribed by the Government of the State off whose coast the vessel is engaged, provided such standards do not exceed the criteria in respect of a vessel not engaged in near-coastal voyages.

5.2.3 A vessel which extends its voyages beyond a near-coastal voyage should comply with the present criteria.

5.3 Constructional precautions against capsizing

5.3.1 Access to the machinery space should, if possible, be arranged within the forecastle. Any access to the machinery space from the exposed cargo deck should be provided with two weathertight closures. Access to spaces below the exposed cargo deck should preferably be from a position within or above the superstructure deck.

5.3.2 The area of freeing ports in the side bulwarks of the cargo deck should at least meet the requirements of Regulation 24 of the International Convention on Load Lines, 1966 or the Protocol of 1988 relating thereto, as amended, as applicable. The disposition of the freeing ports should be carefully considered to ensure the most effective drainage of water trapped in pipe deck cargoes or in recesses at the after end of the forecastle. In vessels operating in areas where icing is likely to occur, no shutters should be fitted in the freeing ports.

5.3.3 **TL** should give special attention to adequate drainage of pipe stowage positions having regard to the individual characteristics of the vessel. However, the area provided for drainage of the pipe stowage positions should be in excess of the required freeing port area in the cargo deck bulwarks and should not be fitted with shutters.

5.3.4 A vessel engaged in towing operations should be provided with means for quick release of the towing hawser.

5.4 Operational procedures against capsizing

5.4.1 The arrangement of cargo stowed on deck should be such as to avoid any obstruction of the freeing ports or of the areas necessary for the drainage of pipe stowage positions to the freeing ports.

5.4.2 A minimum freeboard at the stern of at least 0.005 L should be maintained in all operating conditions.

5.5 Stability Criteria

5.5.1 The stability criteria given in item B.10.2 should apply to all offshore supply vessels except those having characteristics which render compliance with item B.10.2 impracticable.

5.5.2 The following equivalent criteria should be applied where a vessel's characteristics render compliance with item B.10.2 impracticable:

5.5.2.1 The area under the curve of righting levers (GZ curve) should not be less than 0.07 metre-radians up to an angle of 15° when the maximum righting lever (GZ) occurs at 15° and 0.055 metre-radians up to an angle of 30° when the maximum righting lever (GZ) occurs at 30° or above. Where the maximum righting lever (GZ) occurs at angles of between 15° and 30°, the corresponding area under the righting lever curve should be:

$0.055 + 0.001\,(30° - \phi_{max})$ metre-radians;

ϕ_{max} is the angle of heel in degrees at which the righting lever curve reaches its maximum.

5.5.2.2 The area under the righting lever curve (GZ curve) between the angles of heel of 30°and 40°, or between 30°and ϕ_f if this angle is less than 40°, should be not less than 0.03 metre-radians;

5.5.2.3 The righting lever (GZ) should be at least 0.2 m at an angle of heel equal to or greater than 30°;

5.5.2.4 The maximum righting lever (GZ) should occur at an angle of heel not less than 15°;

5.5.2.5 The initial transverse metacentric height (GMo) should not be less than 0.15 m; and

5.5.2.6 Reference is made also to B.10.1.3 to B.10.1.5 and G.1.

5.6 For severe wind and rolling criterion (weather criterion) B.11 shall be satisfied.

6. Special Purpose Ships

6.1 Application

The provisions given hereunder apply to special purpose ships, as defined in Definitions, of not less than 500 gross tonnage. The Administration may also apply these provisions as far as reasonable and practicable to special purpose ships of less than 500 gross tonnage.

6.2 Stability criteria

The intact stability of special purpose ships should comply with the provisions given in B.10.2 except that the alternative criteria given in 5.5 which apply to offshore supply vessels may be used for special purpose ships of less than 100 m in length of similar design and characteristics.

6.3 For severe wind and rolling criterion (weather criterion) B.11 shall be satisfied.

E. Subdivision and Damage Stability of Cargo and Passenger Ships

1. General

1.1. Application

The requirements of this Section apply to cargo ships of 80 m. and more and to all passenger ships regardless of length, as well as those ships covered by other damage stability regulations in conventions or codes.

Note:

This Section refers to Chapter II-1 of SOLAS as amended and the related Explanatory Notes. Alternative arrangements will be accepted for a particular ship or group of ships, if they have been acknowledged by the competent Administration as providing at least the same degree of safety.

1.1.1 All passenger vessels and all cargo vessels with Ls ≥ 80 m excluding those ships covered by other damage stability regulations in conventions and codes have to fulfill the stability requirements of part B-1 of SOLAS as amended in conjunction with Resolution MSC.281(85) Explanatory Notes to the SOLAS Chapter II-1 Subdivision and Damage Stability Regulations .

See also IMO MSC/Circ.998 and IACS unified interpretation “Timber deck cargo in the context of damage stability requirements” (UI SC161).

1.1.2 Oil Tankers of 150 GT and more have to fulfill the stability requirements of specified in regulation 28 of Annex I to Convention MARPOL 73/78 with Protocol 1978 and Protocol 1997, as further amended.

1.1.3 Bulk Carriers with the length L ≥ 150 m of: single skin construction, double-side skin construction in which any part of longitudinal bulkhead is located within B/5 or 11.5 m (whichever is less), inboard from the ship’s side at right angle to the centre line at the assigned summer load waterline,designed to carry solid bulk cargoes having a density of 1000 kg/m3 and above, are to comply with the requirements for damage stability, specified in SOLAS XII/4, as amended. They are to comply also with the requirements of regulations 5 to 14 of the above-mentioned Convention.

1.1.4 Special Purpose Ships

Special purpose ships are to comply with the Code of Safety for Special Purpose Ships, Chapter 2, introduced by IMO Resolution MSC.266(84), as may be amended.

1.1.5 Fishing Vessels

Fishing vessels with the length L >100 m, with the total number of persons carried >100 are to comply with the requirements for: stability parameters of a damaged ship in the final stage of flooding any one compartment, specified in regulation 14, Chapter III of Attachment 1 to the 1993 Torremolinos Protocol (relating to Torremolinos International Convention for the Safety of Fishing Vessels, 1977).

1.1.6 Chemical Tankers

Chemical tankers are to comply with the requirements specified in Chapter 2 of the International Code for the Construction and Equipment of Ships Carrying Dangerous Chemicals in Bulk (IBC Code) and Türk Loydu rules, Part C Chapter 8 Section 2.

1.1.7. Gas Tankers

Gas tankers are to comply with the requirements specified in Chapter 2 of the International Code for the Construction and Equipment of Ships Carrying Liquefied Gases in Bulk (IGC Code) and Türk Loydu rules, Part C Chapter 10 Section 2.

1.1.8 Ships of Type "A" and Ships of Type "B" with Reduced Freeboard

1.1.8.1 Type 'A' ships if over 150 m in length to which a freeboard less than type 'B' has been assigned are to be comply with the requirements specified in regulation 27 of the International Convention on Load Lines, 1966 as amended.

1.1.8.2 Type 'B' ships with the length L > 100 m, with reduced freeboard, are to comply with the relevant requirements of Regulation 27,

1.1.9 Supply Vessels

1.1.9.1 Supply vessels with the length 24 m < L< 100 m are to comply with the requirements specified in Chapter 3 of Guidelines for the Design and Construction of Offshore Supply Vessels, introduced by IMO Resolution MSC.235(82) amended by Resolution MSC.335(90).

1.1.9.2 The requirements for supply vessels with the length L > 100 m are specified separately by the administration .

1.1.10 Regional Requirements for Damage Stability of Ro-Ro Passenger Ships

All ro-ro passenger ships operating to or from a port a Member State of the European Union on a regular service, regardless of their flag, when engaged of international voyages, are to comply with the provisions of Directive 2003/25/EC of the European Parliament and of the Council of 14 April 2003, as amended by Commission Directive 2005/12/EC of 8 February 2005 on specific stability requirements for ro-ro passenger ships.

For ro-ro passenger ships undertaking international voyages between or to or from ports in Northwest Europe and the Baltic Sea, the Agreement Concerning Specific Stability Requirements for Ro-Ro Passenger Ships Undertaking Regular Scheduled International Voyages between or to or from Designated Ports in NorthWest Europe and the Baltic Sea (the Stockholm Agreement of 28 February 1996) is to apply.

1.2 Character of Classification

Ships for which damage stability according to a convention or code has been proven will be assigned the symbol FS for characterizing proof of damage stability. The following data will be entered into an appendix to the Certificate:

1.2.1 Code for the specification of the proof of damage stability according to the **TL** Rules for Classification and Surveys , Section 2.7.

1.3 Documents for approval

The following documents are to be submitted:

- Drawings showing the external openings and the closing devices thereof
- Drawings showing the watertight subdivision as well as internal openings and the closing devices there of
- Damage stability calculation in accordance with SOLAS as amended and the related Explanatory Notes if applicable
- Damage stability calculations according to any other convention or code which is applicable for the vessel

- Damage control plan containing all data essential for maintaining the survival capability

2. Double Bottom

2.1 For all passenger vessels and all cargo vessels of 500 GT and more excluding tankers the arrangement shall comply with Chapter II-1 of SOLAS in the following manner;

2.2 A double bottom shall be fitted extending from the collision bulkhead to the after peak bulkhead, as far as this is practicable and compatible with the design and proper working of the ship.

2.3 Where a double bottom is required to be fitted the inner bottom shall be continued out to the ship's sides in such a manner as to protect the bottom to the turn of the bilge. Such protection will be deemed satisfactory if the inner bottom is not lower at any part than a plane parallel with the keel line and which is located not less than a vertical distance h measured from the keel line, as calculated by the formula:

$$h = B/20$$

However, in no case is the value of h to be less than 760 mm, and need not be taken as more than 2000 mm.

2.4 Small wells constructed in the double bottom in connection with drainage arrangements of holds, etc., shall not extend downward more than necessary. In no case shall the vertical distance from the bottom of such a well to a plane coinciding with the keel line be less than 500 mm.

2.5 In the case of unusual bottom arrangements in a passenger ship or a cargo ship, it shall be demonstrated that the ship is capable of withstanding bottom damages as specified in Chapter II-1 of SOLAS as amended.

3. Watertight Bulkheads and Decks

3.1 For watertight bulkheads Section 11 and for decks Section 7.D is to be observed.

3.2 The scantlings of watertight bulkheads and decks, forming the boundaries of watertight compartments assumed flooded in the damage stability analysis, shall be based on pressure heights corresponding to 1 m above the deepest final waterline of the damage cases contributing to the attained subdivision index A.

3.3 The number of openings in watertight subdivisions is to be kept to a minimum compatible with the design and proper working of the ship. Where penetrations of watertight bulkheads and internal decks are necessary for access, piping, ventilation, electrical cables, etc., arrangements are to be made to maintain the watertight integrity. The Administration may permit relaxations in the water tightness of openings above the freeboard deck, provided that it is demonstrated that any progressive flooding can be easily controlled and that the safety of the ship is not impaired.

3.4 Doors provided to ensure the watertight integrity of internal openings which are used while at sea are to be sliding watertight doors (see the **TL** Rules for Machinery Installations, Section 10, A.5) capable of being remotely closed from the bridge and are also to be operable locally from each side of the bulkhead.

Indicators are to be provided at the control position showing whether the doors are open or closed, and an audible alarm is to be provided at the door closure. The power, control and indicators are to be operable in the event of main power failure. Particular attention is to be paid to minimize the effect of control system failure. Each power-operated sliding watertight door shall be provided with an individual hand-operated mechanism. It shall be possible to open and close the door by hand at the door itself from both sides.

3.5 Access doors and access hatch covers normally closed at sea, intended to ensure the watertight integrity of internal openings, shall be provided with means of indication locally and on the bridge showing whether these doors or hatch covers are open or closed. A notice is to be affixed to each such door or hatch cover to the effect that it is not to be left open.

3.6 Watertight doors or ramps of satisfactory

construction may be fitted to internally subdivide large cargo spaces, provided that the Administration is satisfied that such doors or ramps are essential. These doors or ramps may be hinged, rolling or sliding doors or ramps, but shall not be remotely controlled, see interpretation of regulations of Part B-1 of SOLAS Chapter II-1 (MSC/Circ. 651). Should any of the doors or ramps be accessible during the voyage, they shall be fitted with a device which prevents unauthorized opening.

3.7 Other closing appliances which are kept permanently closed at sea to ensure the watertight integrity of internal openings shall be provided with a notice which is to be affixed to each such closing appliance to the effect that it is to be kept closed.

Manholes fitted with closely bolted covers need not be so marked.

3.8 For openings in watertight bulkheads below the bulkhead deck in passenger ships refer to Chapter II-1 of SOLAS as amended.

4. External Openings

4.1 All external openings leading to compartments assumed intact in the damage analysis, which are below the final damage waterline, are required to be watertight. Such openings shall, except for cargo hatch covers, be fitted with indicators on the bridge.

4.2 Openings in the shell plating below the deck limiting the vertical extent of damage shall be fitted with a device that prevents unauthorized opening, if they are accessible during the voyage.

4.3 Other closing appliances which are kept permanently closed at sea to ensure the watertight integrity of external openings shall be provided with a notice affixed to each appliance to the effect that it is to be kept closed. Manholes fitted with closely bolted covers need not be so marked.

4.4 For openings in the shell plating below the bulkhead deck of passenger ships and the freeboard deck of cargo ships refer to Chapter II-1 SOLAS as amended.

5. Cross-Flooding Arrangements

5.1 Where the damage stability calculation requires the installation of cross-flooding arrangements in order to avoid high asymmetrical flooding, these arrangements shall work automatically as far as possible. Non-automatic controls for cross-flooding fittings are to be capable of being operated from the bridge or another central location. The position of each closing device has to be indicated on the bridge and at the central operating location (see also the **TL** Rules for Machinery Installations, Section 10,A.5., and Electrical Installations, Section 9,D.5.). The sectional areas of the cross-flooding fittings are to be determined in such a way that the time for equalization does not exceed 10 minutes (refer to Resolution MSC.362(92) Revised Recommendation On A Standard Method For Evaluating Cross-Flooding Arrangements). Particular attention is to be paid to the effects of the cross-flooding arrangements upon the stability in intermediate stages of flooding.

5.2 Suitable information concerning the use of the closing devices installed in cross-flooding arrangements shall be supplied to the master of the ship.

5.3 When determining the bulkhead scantlings of tanks, connected by cross-flooding arrangements, the increase in pressure head at the immerged side that may occur at maximum heeling in the damaged condition shall be taken into account.

6. Damage Control Plans

The damage control plan is intended to provide ship's officers with clear information on the ship's watertight subdivision and equipment related to maintaining the boundaries and effectiveness of the subdivision so that, in the event of damage to the ship causing flooding, proper precautions can be taken to prevent progressive flooding through openings therein and effective action can be taken quickly to mitigate and, where possible, recover the ship's loss of stability.

Damage control plans should be in printed form. The use of on-board computers, with damage stability software developed for the specific ship, and familiar to properly trained ship's officers can provide a rapid means to

supplement the information in the plan for effective damage control.

6.1 Damage control plans

The damage control plan should be of a scale adequate to show clearly the required content of the plan. The plan should include inboard profile, plan views of each deck and transverse sections to the extent necessary to show the following:

6.1.1 The watertight boundaries of the ship.

6.1.2 The locations and arrangements of cross-flooding systems, blow-out plugs and any mechanical means to correct list due to flooding, together with the locations of all valves and remote controls, if any.

6.1.3 The locations of all internal watertight closing appliances. The locations of watertight closing appliances which are not allowed to be opened during the navigation and of those watertight closing appliances which are allowed to be opened during navigation should be clearly indicated.

6.1.4 The locations of all doors in the shell of the ship, including position indicators, leakage detection and surveillance devices

6.1.5 The locations of all external watertight closing appliances in cargo ships, position indicators and alarms.

6.1.6 The locations of all weathertight closing appliances in local subdivision boundaries above the bulkhead deck and on the lowest exposed weather decks, together with locations of controls and position indicators, if applicable.

6.1.7 The locations of all bilge and ballast pumps, their control positions and associated valves.

6.1.8 For cargo ships, the damage control plan should be permanently exhibited or readily available on the navigation bridge. Furthermore, the damage control plan should be permanently exhibited or readily available in the cargo control room, all ship's office or other suitable location.

F. Onboard Stability Instruments

The use of onboard stability computers as defined by IACS Unified Requirement L5 is not required by Class. The requirements in this section concerning stability apply to stability software onboard ships contracted for construction on or after 1st July 2005.

A stability instrument installed onboard should cover all stability requirements applicable to the ship. This rules which requires only software approval, applies to onboard computers which are provided with software capable of performing stability calculations for the vessel.The software is subject to approval by **TL**. Active and passive systems are defined in 2. These requirements cover passive systems and the off-line operation mode of active systems only (refer to the Guidelines for the approval of stability instruments (MSC.1/Circ.1229))

Note : *All oil tankers shall be fitted with a stability instrument, capable of verifying compliance with intact and damage stability requirements, refer to Section 28 D 2.6, Chapter 8 Section 2, Chapter 10 Section 2.*

1. General

1.1 The scope of stability calculation software should be in accordance with the approved stability booklet and should at least include all information and perform all calculations or checks as necessary to ensure compliance with the applicable stability requirements.

1.2 An approved stability instrument is not a substitute for the approved stability booklet, and is used as a supplement to the approved stability booklet to facilitate stability calculations.

1.3 The input/output information should be easily comparable with the approved stability booklet so as to avoid confusion and possible misinterpretation by the operator relative to the approved stability information.

1.4 An operation manual is to be provided for the stability instrument.

1.5 The language in which the stability calculation results are displayed and printed out as well as the operation manual is written should be the same as used in the ship's approved stability booklet. **TL** may require a translation into a language considered appropriate.

1.6 The stability instrument is ship specific equipment and the results of the calculations are only applicable to the ship for which it has been approved.

1.7 In case of modifications of the ship which cause alterations in the stability booklet, the specific approval of any original stability calculation software is no longer valid. The software is to be modified accordingly and re-approved.

1.8 Any change in software version related to the stability calculation should be reported to and be approved by **TL**.

2. Data Entry System

2.1 A passive system requires manual data entry.

2.2 An active system replaces partly the manual entry with sensors reading and entering the contents of tanks, etc.

2.3 Any integrated system which controls or initiates actions based on the sensor-supplied inputs is not within the scope of this section except the part calculating the stability.

3. Types of Stability Software

Three types of calculations performed by stability software are acceptable depending upon a vessel's stability requirements:

3.1 Type 1

Software calculating intact stability only (for vessels not required to meet a damage stability criterion).

3.2 Type 2

Software calculating intact stability and checking damage stability on basis of a limit curve (e.g., for vessels applicable to SOLAS part B-1 damage stability calculations, etc.) or previously approved loading conditions.

3.3 Type 3

Software calculating intact stability and damage stability by direct application of pre-programmed damage cases for each loading condition (for some tankers etc.). The results of the direct calculations performed by the stability instrument could be accepted by **TL** even if they differ from the required minimum GM or maximum VCG stated in the approved stability booklet.

Such deviations could be accepted under the condition that all relevant stability requirements will be complied with by the results of the direct calculations.

4. Functional Requirements

4.1 The stability instrument should present relevant parameters of each loading condition in order to assist the master in his judgement on whether the ship is loaded within the approved limits. The following parameters should be presented for a given loading condition:

4.1.1 Detailed deadweight data items including center of gravity and free surfaces, if applicable.

4.1.2 Light ship data

4.1.3 Trim and list.

4.1.4 Draught at the draught marks and perpendiculars.

4.1.5 Summary of loading condition displacement; VCG, LCG, if applicable TCG, VCB, LCB, TCB, LCF, GM and GM_L.

4.1.6 Table showing the righting lever versus heeling angle including trim and draught.

4.1.7 Down-flooding angle and corresponding down-flooding opening.

4.1.8 Compliance with stability criteria: Listings of all calculated stability criteria, the limit values, the obtained values and the conclusions (criteria fulfilled or not fulfilled).

4.2 If direct damage stability calculations are performed, the relevant damage cases according to the applicable rules should be pre-defined for automatic check of a given loading condition.

4.3 A clear warning should be given on screen and in hard copy printout if any of the loading limitations are not complied with.

4.4 The data are to be presented on screen and in hard copy printout in a clear unambiguous manner.

4.5 The date and time of a saved calculation should be part of the screen display and hard copy printout.

4.6 Each hard copy printout should contain identification of the calculation program including version number.

4.7 Units of measurement are to be clearly identified and used consistently within a loading calculation.

4.8 Acceptable Tolerances

Depending on the type and scope of programs, the acceptable tolerances should be determined differently. Depending on the type and the scope of the stability program, the acceptable tolerances are to be determined differently according to 4.8.1 and 4.8.2. Deviations from these tolerances shall not be accepted unless **TL** considers that there is a satisfactory explanation for the differences and that there will be no adverse effect on the safety of the ship.

Examples for pre-programmed input data include the following:

- Hydrostatic data:

Displacement, LCB, LCF, VCB, KMT, and MCT versus draught.

- Stability data:

KN or MS values at appropriate heel/trim angles versus displacement, stability limits.

- Compartment data:

Volume, LCG, VCG, TCG and FSM/Grain heeling moments versus level of the compartment's contents.
Examples of output data include the following:

Hydrostatic data:

Displacement, LCB, LCF, VCB, KMt and MCT versus draught as well as actual draughts, trim.

Stability data:

FSC (free surface correction), GZ-values, KG, GM, KG/GM limits, allowable grain heeling moments, derived stability criteria, e.g. areas under the GZ curve, weather criteria.

Compartment data:

Calculated Volume, LCG, VCG, TCG and FSM/ Grain heeling moments vs level of the compartment’s contents.

The computational accuracy of the calculation program results shall be within the acceptable tolerances specified in 4.8.1 and 4.8.2, of the results using an independent program or the approved stability information with identical input.

4.8.1 Programs which use only pre-programmed data from the approved stability information as the basis for stability calculations, shall have zero tolerances for the printouts of input data.

4.8.2 Output data tolerances are to be close to zero, however, small differences associated with calculation rounding or abridged input data are acceptable. Additionally differences associated with the

use of hydrostatic and stability datafor trims that differ from those in the approved stability information, are acceptable subject to review by **TL**.

4.8.3 Programs which use hull form models as their basis for stability calculations, shall have tolerances for the printouts of basic calculated data established against either data from the approved stability information or data obtained using the approval authority's model. Acceptable tolerances shall be in accordance with Table 26.7.

5. Approval Procedure

5.1 Conditions of approval of the stability instrument.

The software approval includes:

5.1.1 Verification of type approval, if any.

5.1.2 Verification that the data used is consistent with the current condition of the ship (refer to 5.2).

5.1.3 Verification and approval of the test conditions.

5.1.4 Verification that the software is appropriate for the type of ship and stability calculations required.

The satisfactory operation of the stability instrument is to be verified by testing upon installation (refer to 7).

A copy of the approved test conditions and the operation manual for the stability instrument are to be available on board.

5.2 Specific approval

5.2.1 The accuracy of the computational results and actual ship data used by the calculation program for the particular ship on which the program will be installed should be to the satisfaction of **TL**.

5.2.2 Upon application for data verification, minimum of four loading conditions should be taken from the ship's approved stability booklet, which are to be used as the test conditions. For ships carrying liquids in bulk, at least one of the conditions should include partially filled tanks. For ships carrying grain in bulk, one of the grain loading conditions should include a partially filled grain compartment. Within the test conditions each compartment should be loaded at least once. The test conditions normally are to cover the range of load draughts from the deepest envisaged loaded condition to the light ballast condition and should include at least one departure and one arrival condition.

5.2.3 The following data, submitted by the applicant, should be consistent with arrangements and most recently approved lightship characteristics of the ship according to current plans and documentation on file, subject to possible further verification on board:

5.2.3.1 Identification of the calculation program including version number. Main dimensions, hydrostatic particulars and, if applicable, the ship's profile.

5.2.3.2 The position of the forward and aft perpendiculars, and if appropriate, the calculation method to derive the forward and aft draughts at the actual position of the ship's draught marks.

5.2.3.3 Ship's lightweight and center of gravity derived from the most recently approved inclining experiment or light weight survey.

5.2.3.4 Lines plan, offset tables or other suitable presentation of hull form data including all relevant appendages, if necessary to model the ship.

5.2.3.5 Compartment definitions, including frame spacing, and centers of volume, together with capacity tables (sounding/ullage tables), free surface corrections, if appropriate.

5.2.3.6 Cargo and consumables distribution for each loading condition.

Verification by **TL** does not absolve the shipowner of responsibility for ensuring that the information programmed into the stability instrument is consistent with the current condition of the ship and approved stability booklet.

Table 26.7 Acceptable tolerances

Hull Form Dependent	**Tolerances**
Displacement	2%
Longitudinal centre of buoyancy from AP	1% / 50 cm max
Vertical centre of buoyancy	1% / 5 cm max
Transverse centre of buoyancy	0.5% of B / 5 cm max
Longitudinal centre of flotation from AP	1% / 50 cm max
Moment to trim 1 cm	2%
Transverse metacentric height	1% / 5 cm max
Longitudinal metacentric height	1% / 50 cm max
Cross curves of stability	5 cm
Compartment Dependent	**Tolerances**
Volume or deadweight	2%
Longitudinal centre of gravity from AP	1% / 50 cm max
Vertical centre of gravity	1% / 5 cm max
Transverse centre of gravity	0.5% of B / 5 cm max
Free surface moment	2%
Shifting moment	5%
Level of contents	2%
Trim and Stability	**Tolerances**
Draughts (forward, aft, mean)	%1/ 5 cm max
GMT	%1 / 5 cm max
GZ values	5% / 5 cm max
FS correction	2 %
Downflooding angles	2°
Equilibrium angles	1°
Distance to unprotected openings or margin line from WL, if applicable	+/- 5% / 5 cm max
Area under righting arm curve	5 % or 0.0012 mrad

Deviation in % =[(base value - applicant 's value)/ base value]*100

The "base value" may be from the approved stability information or the ***TL*** *computer model.*

5.3 General Approval (optional)

5.3.1 Upon application to **TL** for general approval of the calculation program, the Society may provide the applicant with test data consisting of two or more design data sets, each of which is to include a ship's hull form data, compartmentation data, lightship characteristics and deadweight data, in sufficient detail to accurately define the ship and it's loading condition. Acceptable hull form and compartmentation data may be in the for of surface coordinates for modeling the hull form and compartment boundaries, e.g: a table of offsets, or in the form of pre-calculated tabular data, e.g: hydrostatic tables, capacity tables, etc., depending upon the form of data used by the software being submitted for approval. Alternatively, the general approval may be given based on at least two test ships agreed upon between the **TL** and the applicant.

5.3.2 In general, the software is to be tested for two types of ships for which approval is requested, with at least one design data set for each of the two types. Where approval is requested for only one type of ship, a minimum of two data sets for different hull forms of that type of ship are required to be tested. For calculation software which is bases on the input of hull form data, design data sets shall be provided for three types of ships for which the software is to be approved, or a minimum of three data sets for different hull forms if approval is requested for only one type of ship. Representative ship types which require different design data sets due to their hull forms, typical arrangements, and nature of cargo include: tanker, bulk carrier, container ship, and other dry cargo and passenger ships.

5.3.3 The test data sets shall be used by the applicant to run the calculation program for the test ships. The results obtained (together with the hydrostatic data and cross-curve data developed by the program, if appropriate) shall be submitted to **TL** for the assessment of the program's computational accuracy. **TL** shall perform parallel calculations using the same data sets and a comparison of these results will be made against the applicant's submitted program's results.

5.3.4 Upon satisfactory completion, a respective certificate of acceptance will be issued which is valid only for the identified, specified version of the software and has a period of validity of 5 years.

5.3.5 Documentation Required for General Approval

5.3.5.1 For the purpose of checking the software of intact and damaged stability programs **TL** has developed a so-called "test-ship" enabling requirements for special programs to be tested by means of reference calculations.

In this connection the principal dimensions of the testship, as well as the arrangement of cargo and ballast water tanks and additional points of immersion were fixed in accordance with a realistic design; however, in order to confine the input to a minimum, some simplifications were made. These input data are to be used for calculating a given number of loading conditions under aspects of intact and damaged stability.

Used for calculating a given number of loading conditions under aspects of intact and damaged stability.

5.3.5.2 For this purpose the following particulars will be submitted by TL to the software provider:

- Lines plan, scale 1 : 50, with principal dimensions
- Subdivision plan
- Light ship data and principal dimensions
- Table of side contour; the vessel has neither sheer nor beam
- Table of immersion points with relevant tank numbers
- Table showing co-ordinates of deck at side
- Description of cargo tanks

- Table of tanks with details for each tank

- Weight distributions of test loading conditions

5.3.5.3 Apart from this, the following information is to be used by the software provider:

a) Intact stability criteria:

- As per IS Code Part A Chapter 2 and 3.

b) Damage assumptions:

The sub-compartments of the respective testship are to be assumed as being damaged

c) Damage stability:

as per IMO Resolution criteria (MSC.5 (48), Appendix 1 etc.)

5.3.5.4 After calculation, the following particulars are to be submitted by the software provider:

- Hydrostatic curves (T = 3,0 m to 10,0 m in steps of 0,02 m)

– Cross-curves of stability (fixed trim, ϕ=10° to 70° in steps of 10°)

– Table of all tanks and sub-compartments offering the same information as that contained in the **TL** table

– Printed intact and damage stability results of 12 test loading conditions containing the following data:

– Intact stability:

displacement, VCG, LCG, mean draught, trim TA, TF, LCB, LCF, ETM, KM, VCG', GM', uprighting levers at 0°, 10°, 20°, 30°, 40°, 50° and 60°, range of stability, area under lever arm curve up to 30°, up to 40° and between 30 and 40°

– Damaged stability:

displacement, VCG, LCG, TCG, draught forward, centre aft, GM', at ϕ=0°, lever arm in damaged condition at 0°, 10°, 20°, 30°, 40°, and 50°, points of immersion with minimum freeboard and pertinent x-coordinate, minimum freeboard of margin line with x-co-ordinate; angle of position of equilibrium, lever at angle of position of equilibrium + 20°, area within this range and maximum lever within this range

All particulars are to be submitted on DIN-A4 size sheets.

6. Operation Manual

6.1 A simple and straightforward operation manual written in the same language as the stability booklet is to be provided, containing descriptions and instructions, as appropriate, for at least the following:

6.1.1 Installation.

6.1.2 Function keys.

6.1.3 Menu displays.

6.1.4 Input and output data.

6.1.5 Required minimum hardware to operate the software.

6.1.6 Use of the test loading conditions.

6.1.7 Computer-guided dialogue steps.

6.1.8 List of warnings.

A operation manual in electronic format may be provided in addition to the written manual.

7. Installation Testing

7.1 To ensure correct working of the stability instrument after the final or updated software has been installed, it is the responsibility of the ship's master to have test calculations carried out according to the following pattern in the presence of a **TL** surveyor. From the approved test conditions at least one load case (other than lightship) should be calculated.

Note:

Actual loading condition results are not suitable for checking the correct working of the stability instrument.

7.2 Normally, the test conditions are permanently stored in the stability instrument. Steps to be performed:

7.2.1 Retrieve the test load case and start a calculation run. Compare the stability results with those in the documentation.

7.2.2 Change several items of deadweight (tank weights and the cargo weight) sufficiently to change the draught or displacement by at least 10%. The results are to be reviewed to ensure that they differ in a logical way from those of the approved test condition.

7.2.3 Revise the above modified load condition to restore the initial test condition and compare the results. The relevant input and output data of the approved test condition are to be replicated.

7.2.4 Alternatively, one or more test conditions should be selected and the test calculations performed by entering all deadweight data for each selected test condition into the program as if it were a proposed loading. The results should be verified as identical to the results in the approved copy of the test conditions.

8. Periodical Testing

8.1 It is the responsibility of the ship's master to check the accuracy of the stability instrument at each annual survey by applying at least one approved test condition. If a **TL** surveyor is not present for the stability instrument check, a copy of the test condition results obtained by this check is to be retained on board as documentation of satisfactory testing for a **TL** surveyor's verification.

8.2 At each renewal survey this checking for all approved test loading conditions is to be done in the presence of a **TL** surveyor.

8.3 The testing procedure should be carried out in accordance with 7.

9. Other Requirements

9.1 Protection against unintentional or unauthorized modification of programs and data should be provided.

9.2 The program should monitor operation and activate an alarm when the program is incorrectly or abnormally used.

9.3 The program and any data stored in the system should be protected from corruption by loss of power.

9.4 Error messages with regard to limitations such as filling a compartment beyond capacity or more than once, or exceeding the assigned load line, etc., should be included.

9.5 If any software related to stability measures such as sea keeping abilities of the vessel, evaluation of in-service inclining experiments and processing the results for further calculation, as well as the evaluation of roll period measurements is installed on board, such software should be reported to **TL** for consideration.

9.6 Program functionalities should include mass and moment calculations with numerical and graphical presentation of the results, such as initial stability values, righting lever curve, areas under the righting lever curve and range of stability.

9.7 All input data from automatically measuring sensors, such as gauging devices or draught reading systems should be presented to the user for verification. The user should have the possibility to override faulty readings manually.

G. Operational Provisions Against Capsizing

1. General precautions against capsizing

1.1 Compliance with the stability criteria does not ensure immunity against capsizing, regardless of the circumstances, or absolve the master from his responsibilities. Masters should therefore exercise prudence and good seamanship having regard to the

season of the year, weather forecasts and the navigational zone and should take the appropriate action as to speed and course warranted by the prevailing circumstances (refer to the Revised Guidance to the master for avoiding dangerous situations in adverse weather and sea conditions, MSC.1/Circ.1228).

1.2 Care should be taken that the cargo allocated to the ship is capable of being stowed so that compliance with the criteria can be achieved. If necessary, the amount should be limited to the extent that ballast weight may be required.

1.3 Before a voyage commences, care should be taken to ensure that the cargo, cargo handling cranes and sizeable pieces of equipment have been properly stowed or lashed so as to minimize the possibility of both longitudinal and lateral shifting, while at sea, under the effect of acceleration caused by rolling and pitching (refer to the Guidelines for the preparation of the Cargo Securing Manual, MSC.1/Circular.1353).

1.4 A ship, when engaged in towing operations, should possess an adequate reserve of stability to withstand the anticipated heeling moment arising from the tow line without endangering the towing ship. Deck cargo on board the towing ship should be so positioned as not to endanger the safe working of the crew on deck or impede the proper functioning of the towing equipment and be properly secured. Tow line arrangements should include towing springs and a method of quick release of the tow.

1.5 The number of partially filled or slack tanks should be kept to a minimum because of their adverse effect on stability. The negative effect on stability of filled pool tanks should be taken into consideration.

1.6 The stability criteria contained in this document set minimum values, but no maximum values are recommended. It is advisable to avoid excessive values of metacentric height, since these might lead to acceleration forces which could be prejudicial to the ship, its complement, its equipment and to safe carriage of the cargo. Slack tanks may, in exceptional cases, be used as a means of reducing excessive values of metacentric height. In such cases, due consideration should be given to sloshing effects.

1.7 Regard should be paid to the possible adverse effects on stability where certain bulk cargoes are carried. In this connection, attention should be paid to the IMO Code of Safe Practice for Solid Bulk Cargoes.

2. Operational precautions in heavy weather

2.1 All doorways and other openings, through which water can enter into the hull or deckhouses, forecastle, etc., should be suitably closed in adverse weather conditions and accordingly all appliances for this purpose should be maintained on board and in good condition.

2.2 Weathertight and watertight hatches, doors, etc., should be kept closed during navigation, except when necessarily opened for the working of the ship and should always be ready for immediate closure and be clearly marked to indicate that these fittings are to be kept closed except for access. Hatch covers and flush deck scuttles in fishing vessels should be kept properly secured when not in use during fishing operations. All portable deadlights should be maintained in good condition and securely closed in bad weather.

2.3 Any closing devices provided for vent pipes to fuel tanks should be secured in bad weather.

2.4 Fish should never be carried in bulk without first being sure that the portable divisions in the holds are properly installed.

3. Ship handling in heavy weather

3.1 In all conditions of loading necessary care should be taken to maintain a seaworthy freeboard.

3.2 In severe weather, the speed of the ship should be reduced if propeller emergence, shipping of water on deck or heavy slamming occurs.

3.3 Special attention should be paid when a ship

is sailing in following, quartering or head seas because dangerous phenomena such as parametric resonance, broaching to, reduction of stability on the wave crest, and excessive rolling may occur singularly, in sequence or simultaneously in a multiple combination, creating a threat of capsize. A ship's speed and/or course should be altered appropriately to avoid the above-mentioned phenomena (refer to the Revised Guidance to the master for avoiding dangerous situations in adverse weather and sea conditions, MSC.1/Circ.1228).

3.4 Reliance on automatic steering may be dangerous as this prevents ready changes to course which may be needed in bad weather.

3.5 Water trapping in deck wells should be avoided. If freeing ports are not sufficient for the drainage of the well, the speed of the ship should be reduced or the course changed, or both. Freeing ports provided with closing appliances should always be capable of functioning and are not to be locked.

3.6 Masters should be aware that steep or breaking waves may occur in certain areas, or in certain wind and current combinations (river estuaries, shallow water areas, funnel shaped bays, etc.). These waves are particularly dangerous, especially for small ships.

3.7 In severe weather, the lateral wind pressure may cause a considerable angle of heel. If anti-heeling measures (e.g., ballasting, use of anti-heeling devices, etc.) are used to compensate for heeling due to wind, changes of the ship's course relative to the wind direction may lead to dangerous angles of heel or capsizing. Therefore, heeling caused by the wind should not be compensated with anti-heeling measures, unless, subject to the approval by the Administration, the vessel has been proven by calculation to have sufficient stability in worst case conditions (i.e. improper or incorrect use, mechanism failure, unintended course change, etc.). Guidance on the use of anti-heeling measures should be provided in the stability booklet.

3.8 Use of operational guidelines for avoiding dangerous situations in severe weather conditions or an on-board computer based system is recommended. The method should be simple to use.

3.9 High-speed craft should not be intentionally operated outside the worst intended conditions and limitations specified in the relevant certificates, or in documents referred to therein.

SECTION 27

BULK CARRIERS, ORE CARRIERS AND SHIPS WITH STRENGTHENINGS FOR BULK CARGO AND HEAVY CARGO

A. Strengthenings for Bulk Cargo and Heavy Cargo

1. General

1.1 For ships, occasionally or regularly carrying heavy cargo, such as iron, ore, phosphate etc., and not intended to get the notation **"BULK CARRIER"** (see B.) or **"ORE CARRIER"** (see C.) affixed to their character of classification strengthenings according to the following regulations are recommended.

1.2 Ships complying with these requirements will get the following notation affixed to their character of classification **"STRENGTHENED FOR HEAVY CARGO".**

1.3 It is recommended to provide adequate strengthening or protection of structural elements within the working range of grabs. For assignment of the Notation “G” into the certificate behind the character of classification, refer also to item B.10.

Note

*Multi-purpose vessels which occasionally carry dry cargoes in bulk and are not determined as bulk carriers in accordance with **SOLAS**, Ch. IX, Reg. 1.6 have to fulfil the regulations of resolution MSC.277 (85).*

2. Double Bottom

2.1 Where longitudinal framing is adopted for the double bottom, the spacing of plate floors should, in general, not be greater than the height of the double bottom. The scantlings of the inner bottom longitudinals are to be determined for the load of the cargo according to Section 8, C.2.

For the longitudinal girder system, see Section 8, B.3.5.5.

2.2 Where transverse framing is adopted for the double bottom, plate floors according to Section 8, B.3.4 are to be fitted at every frame in way of the cargo holds.

2.3 For strengthening of inner bottom, deep tank tops etc. in way of grabs, see Section 7, B.7.

2.4 In the drawings to be submitted, details are to be given regarding the loads resulting from the cargo, upon which the calculations are based.

3. Longitudinal Strength

The longitudinal strength of the ship must comply with the requirements of Section 6 irrespective of the ship's length.

B. Bulk Carriers

1. General

1.1 Bulk carrier means a ship which is constructed generally with single deck, top-side tanks and hopper side tanks in cargo spaces, and is intended primarily to carry dry cargo in bulk, and includes such types as ore carriers and combination carriers.

1.2 For hull structural design of bulk carriers with **L** ≥ 90 m. contract for construction of which was signed on April 1,2006 and after, the IACS Common Structural Rules for Bulk Carriers and Oil Tankers, Part 1 and Part 2, Chapter 1 are applicable.

In addition to **BULK CARRIER** these ships will be assigned the Notation **CSR**.

1.3 Bulk carriers built in accordance with the following requirements will get the notation **"BULK CARRIER"** affixed to their character of classification. Entries will be made into the certificate as to whether specified cargo holds may be empty in case of alternating loading. Additional indications of the types of cargo for which the ship is strengthened may be entered into the certificate.

1.4 Multi-purpose vessels which occasionally carry dry cargoes in bulk and are not determined as bulk carriers in accordance with SOLAS, Ch. IX, Reg. 1.6 have to fulfill the regulations of resolution MSC.277 (85).

1.5 The requirements of Sections 1 to 26 apply to bulk carriers unless otherwise mentioned in this Section.

1.6 For bulk carriers carrying also oil in bulk also Section 28, J applies.

1.7 Where reduced freeboards according to **ICLL** shall be assigned, the respective requirements of the Load Line Convention are to be observed.

1.8 For dewatering requirements of forward spaces of bulk carriers, see Chapter 4, Machinery Installations, Section 16.

1.9 For water ingress detection systems of bulk carriers, see Chapter 5, Electrical Installations, Section 18.

2. Materials and Protection

2.1 Materials and grades of steel are to comply with the requirements of Section 3.A.

2.2 For the protection of the steelwork, at the time of new construction, all internal and external surfaces of hatch coamings and hatch covers, and all internal surfaces of the cargo holds, excluding the flat tank top areas and the hopper tanks sloping plating approximately 300 mm below the side shell frame and brackets, are to have an efficient protective coating (epoxy coating or equivalent) applied in accordance with the manufacturer's recommendation. In the selection of coating due consideration is to be given by the owner to intended. (see Fig. 27.1).

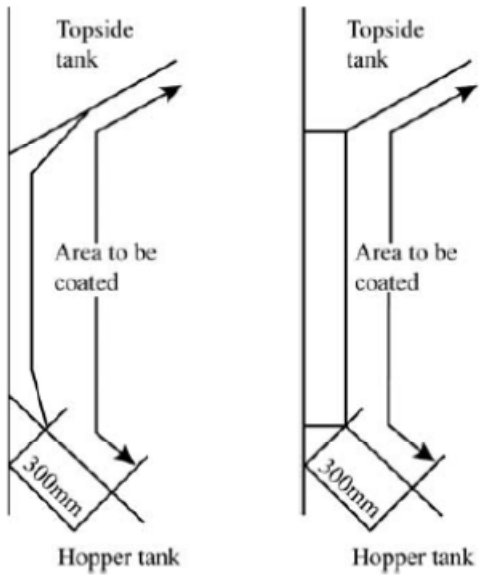

3. Structural Arrangement

3.1 A ship is considered in this Section a "Single Side Skin Bulk Carrier" when one or more cargo holds are bound by the side shell only or by two watertight boundaries, one of which is the side shell, which are less than 1000 mm apart. The distance between the watertight boundaries is to be measured perpendicular to the side shell.

When the distance is 1000 mm. or above in cargo length area, such a ship is considered a "Double Side Skin Bulk Carrier". A typical midship section is given in Fig. 27.2.

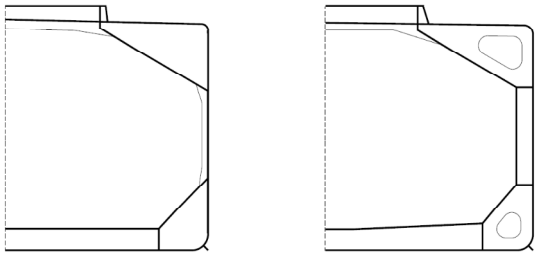

Fig 27.2 Single and double skin bulk carrier

3.2 All bulk carriers, ore carriers and combination carriers are to be fitted with an enclosed forecastle on the freeboard deck. The structural arrangements and scantlings of the forecastle are to comply with the requirements of Section 13.

The forecastle is to be located on the freeboard deck with its aft bulkhead fitted in way or aft of the forward bulkhead of the foremost hold (see Fig. 27.3).

However, if this requirement hinders hatch cover operation, the aft bulkhead of the forecastle may be fitted forward of the forward bulkhead of the foremost cargo hold provided the forecastle length is not less than 7% of ship length abaft the forward perpendicular where the ship length and forward perpendicular are defined in the International Convention on Load Line 1966 and its Protocol 1988.

The forecastle height, H_F [m], above the main deck is not to be less than the greater of:

- The standard height of a superstructure as specified in the **ICLL**, or

- H_c + 0,5 [m]

H_c = Height of the forward transverse hatch coaming of cargo hold No. 1 [m]

In order to use the reduced design loads for the forward transverse hatch coaming and hatch cover stoppers (see G.) of the foremost cargo hold, the distances between all points of the aft edge of the forecastle deck and the hatch coaming plate, ℓ_F [m], are to comply with the following (see Figure 27.3):

$$\ell_F \leq 5\sqrt{H_F - H_c} \quad [m]$$

A breakwater is not to be fitted on the forecastle deck with the purpose of protecting the hatch coaming or hatch covers. If fitted for other purposes, it is to be located such that its upper edge at centre line is not less than HB / tan20^0 forward of the aft edge of the forecastle deck, where HB is the height of the breakwater above the forecastle (see Fig. 27.3):

H_B = Is the height of the breakwater above the forecastle.

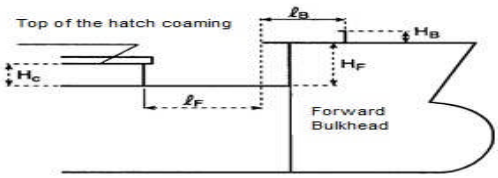

Figure 27.3 Dimensions of the forecastle

4. Longitudinal Strength

4.1 The reduction in scantling from the midship part to the end parts is to be effected as gradually as practicable. Attention is to be paid to the structural continuity in way of changes in the framing system, at the connections of primary supporting members or ordinary stiffeners and in way of the ends of the fore and aft parts and machinery space and in way of the ends of superstructures.

4.2 Longitudinal members are to be so arranged as to maintain the continuity of strength. Longitudinal members contributing to the hull girder longitudinal strength are to extend continuously for a sufficient distance towards the end of ship. In particular, the continuity of the longitudinal bulkheads, including vertical and horizontal primary supporting members, extended over the cargo hold area is to be ensured beyond the cargo hold area. Scarfing brackets are a possible means.

4.3 Primary supporting members are to be arranged in such a way that they ensure adequate continuity of strength. Abrupt changes in height or cross section are to be avoided.

4.4 Ordinary stiffeners contributing to the hull girder longitudinal strength are generally to be continuous when crossing primary supporting members.

4.5 Section 8, B.3 is to be considered for alternate loading condition

4.6 For ships of 150 m. in length and above, Section 6, G. and C is to be considered especially.

5. Scantlings of Bottom Structure

5.1 General

The scantlings of double bottom structures in way of the cargo holds are to be determined by means of direct calculations according to Section 8, B.3.

For ships according to Section 5, G, C has to be considered in addition.

5.2 Floors under corrugated bulkheads

Plate floors are to be fitted under the face plate strips of corrugated bulkheads. A sufficient connection of the corrugated bulkhead elements to the double bottom structure is to be ensured. Under the inner bottom, scallops in the above mentioned plate floors are to be restricted to those required for crossing welds.

The plate floors as well as the face plate strips are to be welded to the inner bottom according to the stresses to be transferred. In general, single bevel T-joints or double bevel T-joints are to be used.

5.3 Inner bottom and tank side slopes

5.3.1 The thickness of the inner bottom plating is to be determined according to Section 7, B.7.

When determining the load on inner bottom P_{SB}, a cargo density of more than 1 t/m^3 is to be used. Where P_{SB} is Bulk cargo pressure as defined in Section 5.

For determining scantlings of tank side slopes the load P_{SB} is not to be taken less than the load which results from an angle of heel of 20°.

5.3.2 For strengthening of inner bottom plating within the working range of grabs, refer to item 10.1.

5.3.3 Sufficient continuity of strength is to be provided for between the structure of the bottom wing tanks and the adjacent longitudinal structure.

6. Side Structures

6.1 Side Longitudinals, Longitudinal Stiffeners, Main Frames

The scantlings of side longitudinals are to be determined according to Section 8, C.2. The longitudinal stiffeners at the lower tank side slopes are to have the same section modulus as the side longitudinals. Their scantlings are also to be checked for the load according to 5.3.1. For the longitudinal stiffeners of the topside tanks within the upper flange Section 11, B.2.1.5 is to be considered.

6.2 Main frames and end connections

The section modulus of main frames of single side skin bulk carriers is to be increased by at least 20% above the value required by Section 8, C.

The section modulus W of the frame and bracket or integral bracket, and associated shell plating, at the locations shown in Fig. 27.4, is not to be less than twice the section modules W_F required for the frame midspan area.

The dimensions of the lower and upper brackets are not to be less than those shown in Fig. 27.5

Structural continuity with the upper and lower end connections of side frames is to be ensured within topsides and hopper tanks by connecting brackets as shown in Fig. 27.6.

Frames are to be fabricated symmetrical sections with integral upper and lower brackets and are to be arranged with soft toes.

The side frame flange is to be curved (not knuckled) at the connection with the end brackets. The radius of curvature is not to be less than r, in [mm], given by:

$$r = 0.4\frac{b_f^2}{t_f}$$

Where; b_f and t_f, are the flange width and thickness of the brackets, respectively, in [mm]. The end of the flange is to be sniped.

In ships with **L**<190 m. mild steel frames may be asymmetric and fitted with separate brackets. The face plate or flange of the bracket is to be snipped at both ends. Brackets are to be arranged with soft toes.

The web depth to thickness ratio of frames is not to be exceed the following values:

$\frac{h_w}{t_w} = 60 \cdot \sqrt{k}$ for symmetrically flanged frames

$\frac{h_w}{t_w} = 50 \cdot \sqrt{k}$ for asymmetrically flanged frames.

The outstanding flange b_1 is not to exceed $10 \cdot \sqrt{k}$ times the flange thickness, see Fig. 27.4.

In way of the foremost hold, side frames of asymmetrical section are to be fitted with tripping brackets at every two frames according to Section 8, C.1.5.5.

Where proof of fatigue strength according to Section 3, D is carried out for the main frames, this proof is to be based on the scantlings which do not include the 20 percent increase in section modules.

For bulk carrier ship configurations which incorporate hopper and topside tanks the minimum thickness of frame webs in cargo holds and ballast holds is not to be less than:

$t_{w,min}$ = C · (7.0 + 0.03 **L**) [mm]

C = 1.15 for the frame webs in way of the foremost hold.

C = 1.00 for the frame webs in way of other holds.

Where **L** need not be taken greater than 200 m.

The thickness of the brackets at the lower frame ends is not to be less than the required web thickness t_w of the frames or $t_{w,min}$ + 2.0 mm, whichever is the greater value.

The thickness of the frame upper bracket is not to be less than the greater of t_w and $t_{w,min}$

6.3 Minimum thickness of side shell plating

The thickness of side shell plating located between hopper and upper wing tanks is not to be less than $t_{p,min}$, in [mm], given by:

$$t_{p,min} = \sqrt{L} \text{ [mm]}$$

6.4 Weld connections of frames and end brackets

Double continuous welding is to be adopted for the connections of frames and brackets to side shell, hopper and upper wing tank plating and web to face plates.

For this purpose, the weld throat is to be (see Fig. 27.4).

- 0.44 · t in zone “a”
- 0.40 · t in zone “b”

Where t is the thinner of the two connected members.

Where the hull form is such to prohibit an effective fillet weld, edge preparation of the web of frame and bracket may be required, in order to ensure the same efficiency as the weld connection stated above.

7. Topside Tanks

7.1 The plate thickness of the topside tanks is to be determined according to Section 11, B.1.

7.2 Where the transverse stiffening system is applied for the longitudinal walls of the topside tanks and for the shell plating in way of the topside tanks, the stiffeners of the longitudinal walls are to be designed according to Section 11, B.2, the transverse frames at the shell according to Section 8, C.

7.3 The buckling strength of top side tank structure is to be examined in accordance with Section 3, C.

7.4 Sufficient continuity of strength is to be provided for between the structure of the topside tanks and the adjacent longitudinal structure.

8. Transverses in the Wing Tanks

Transverses in the wing tanks are to be determined according to Section 11, B.4 for the load resulting from the head of water or for the cargo load. The greater load is to be considered. The scantlings of the transverses in the lower wing tanks are also to be examined for the loads according to 5.3.1.

9. Cargo Hold Bulkheads

The following requirement apply to cargo hold bulkheads on the basis of the conditions according to Section 6, H.

For vertically corrugated transverse cargo hold bulkheads on ships according to Section 6, G. the requirements of E. apply in addition, where the strength in the hold flooded condition has to be ensured.

9.1 The scantlings of the cargo hold bulkheads are to be determined on the basis of the requirements for tank structures according to Section 12, B., where the load P_{ST} and P_{DT} according to Section 5, C and D is to be used.

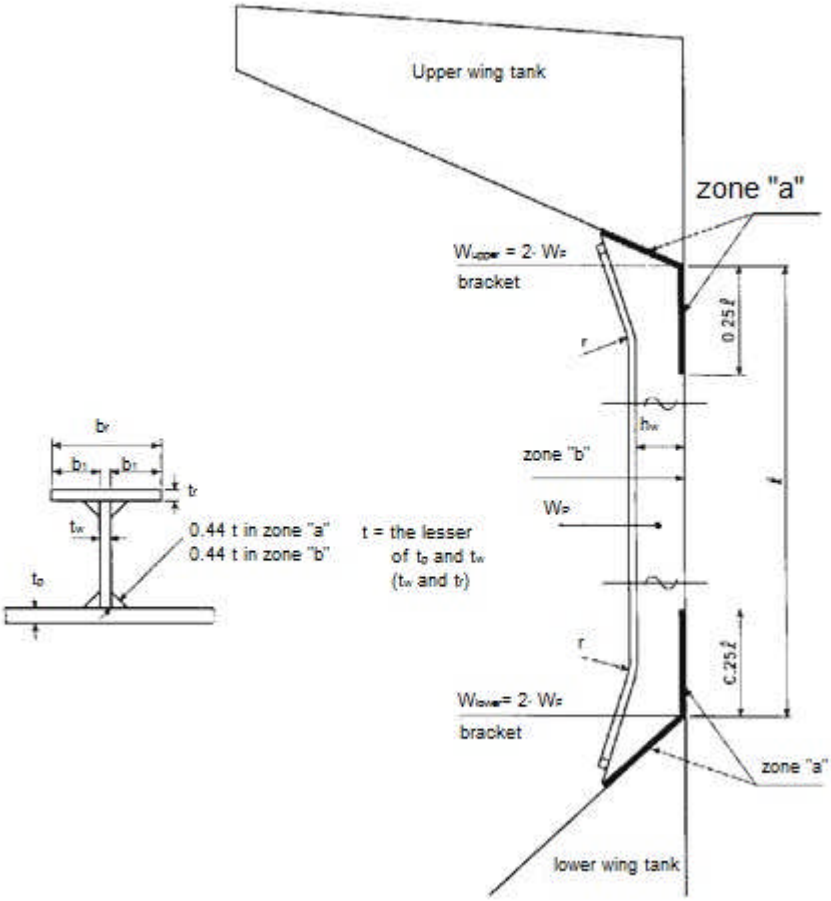

Figure 27.4 Side frame of single side skin bulk carrier

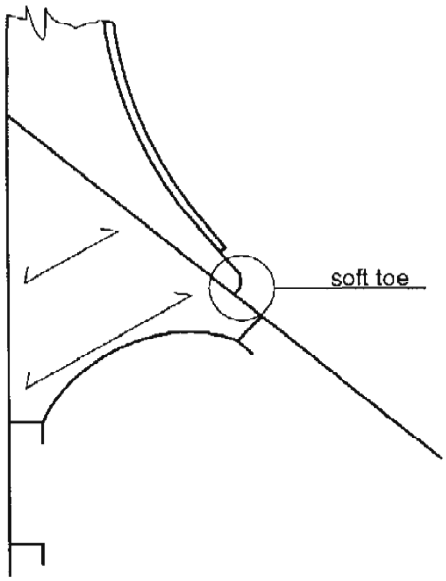

Figure 27.5 Dimensions of the upper and lower

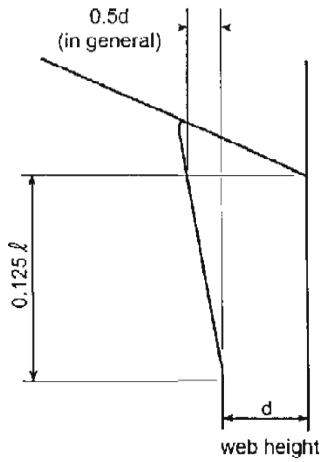

Figure 27.6 Connecting bracket in the hopper tank bracket of the side frames

9.2 The scantlings are not to be less than those required for watertight bulkheads according to Section 11, B. The plate thickness is in no case to be taken less than 9.0 mm.

9.3 The scantlings of the cargo hold bulkheads are to be verified by direct calculations.

9.4 Above vertically corrugated bulkheads, transverse girders with double webs are to be fitted below the deck, to form the upper edge of the corrugated bulkheads. They are to have the following scantlings:

- Web thickness = Thickness of the upper plate strake of the bulkhead
- Depth of web ≈ **B**/22
- Face plate (thickness) = 1.5 times the thickness of the upper plate strake of the bulkhead.

See also D, 4.1.3.

9.5 Vertically corrugated transverse cargo hold bulkheads are to have a plane stiffened strip of plating at the ship's sides. The width of this strip of plating is to be 0.15 **H** where the length of the cargo hold is 20 m. Where the length of the cargo hold is greater/smaller, the width of the strip of plating is to be increased/ reduced proportionally.

10. Structural Protection for Use of Grabs

10.1 The thickness of the inner bottom plating will be determined according to following formula if the notation “G” is entered into the certificate behind the character of classification.

$$t_G = 0.28(M_{GR} + 50)\sqrt{ks} \quad [\text{mm}]$$

Where; M_{GR} is the mass of unladen grab in tons, s is the spacing in m of ordinary stiffeners measured at mid-span and k is material factor according to Section 3, A.2.

However t_G shall not be greater than 30 mm. The stressing of horizontal plate fields depends mainly on the use of grabs, therefore, damage of plating cannot be excluded, even in case of compliance with the above provision.

10.2 The scantlings of the hatchway coaming plates are to be determined such as to ensure efficient protection against mechanical damage by grabs.

Wire rope grooving in way of cargo holds openings is to be prevented by fitting suitable protection such as half-round bar on the hatch side girders (i.e. upper portion of top side tank plates), hatch end beams in cargo hold and upper portion of hatch coamings.

The coaming plates are to have a minimum thickness of 15 mm. Stays shall be fitted at every alternate frame. The longitudinal hatchway coamings are to be extended in a suitable manner beyond the hatchway corners.

In way of the hatchway corners full penetration welding by means of double bevel T-joints or single bevel T-joints may be required for connecting the coaming with the deck plating. See also IACS Unified Interpretations SC 208.

10.3 Longitudinal bulkheads exposed to grabs have got a general corrosion addition according to Section 3, B.9 of t_k =2.5 mm.

11. Loading Information for Bulk Carriers, Ore Carriers and Combination Carriers

11.1 General, definitions

11.1.1 Bulk Carriers, Ore Carriers and Combination Carriers of 150 m. length and above are to be provided with an approved loading manual and an approved computer-based loading instrument.

11.1.2 **Loading manual** is a document which describes:

- The loading conditions on which the design of the ship has been based, including permissible limits of still water bending moments and shear forces

- The results of the calculations of still water bending moments, shear forces and where applicable,limitations due to torsional loads.

- For bulk carriers, envelope results and permissible limits of still water bending moments and shear forces in the hold flooded condition according to Section 6, G.

- The cargo hold(s) or combination of cargo holds might be empty at full draught. If no cargo hold is allowed to be empty at full draught, this is to be clearly stated in the loading manual;

- Maximum allowable and minimum required mass of cargo and double bottom contents of each hold as a function of the draught at mid-hold position.

- Maximum allowable and minimum required mass of cargo and double bottom contents of any two adjacent holds as a function of the mean draught may be calculated by averaging the draught of the two mid-hold positions.

- Maximum allowable tank top loading together with specification of the nature of cargo for cargoes other than bulk cargoes.

- Maximum allowable load on deck and hatch covers. If the vessel is not approved to carry load on deck or hatch covers, this is to be clearly stated in the loading manual;

- The maximum rate of ballast change together with the advice that a load plan is to be agreed with the terminal on the basis of the achievable rates of change of ballast.

11.1.3 Loading instrument is an approved computer system which in addition to the requirements given in Section 6, it shall ascertain as applicable that:

- Permissible mass of cargo and double bottom contents in way of each cargo hold as a function of the ship's draught at mid-hold position;

- Permissible mass of cargo and double bottom contents in way of any two adjacent cargo holds as a function of the mean draught in way of these holds;

- Permissible still water bending moment and shear forces in the hold flooded condition according to Section 6, G.

11.2 Conditions of approval of loading manuals

In addition to the requirements given in Section 6, the following loading conditions, subdivided into departure and arrival conditions as appropriate, are to be included in the Loading Manual:

- Alternate light and heavy cargo loading conditions at maximum draught, where applicable;

- Homogeneous light- and heavy cargo loading conditions at maximum draught;

- Ballast conditions including those conditions, where ballast holds are filled when the adjacent topwing-, hopper- and double bottom tanks are empty.

- Short voyage conditions where the vessel is to be loaded to maximum draught but with limited amount of bunkers;

- Multiple port loading/unloading conditions.

- Deck cargo conditions, where applicable;

- Typical loading sequences where the vessel is loaded from commencement of cargo loading to reaching full dead weight capacity, for homogeneous conditions, the relevant part load conditions and alternate conditions where applicable. Typical unloading sequences for these conditions shall also be included. The typical loading/ unloading sequences shall also be developed to not exceed applicable strength limitations. The typical loading sequences shall also be developed paying due attention to loading rate and the deballasting capability **(2)**.

- Typical sequences for change of ballast at sea, where applicable.

(2) *Reference is made to IACS Unified Requirements S1A Annex 1 and Annex 3.*

11.3 Condition of approval of loading instruments

The loading instrument and its operation manual are subjected to approval. In addition to the requirements given in Section 6, the approval is to include as applicable:

- Acceptance of actual hull girder bending moment limits for all read out points.
- Acceptance of actual hull girder shear force limits for all read out points.
- Acceptance of limits for mass of cargo and double bottom contents of each hold as a function of draught.
- Acceptance of limits for mass of cargo and double bottom contents in any two adjacent holds as a function of the mean draught in way of these holds.

C. Ore Carriers

1. General

1.1 Ore carriers are sea going self-propelled ships which are constructed generally with single deck, two longitudinal bulkheads and a double bottom throughout the cargo length area and intended primarily to carry ore cargoes in the centre holds only. Typical midship sections are given in Fig.27.7.

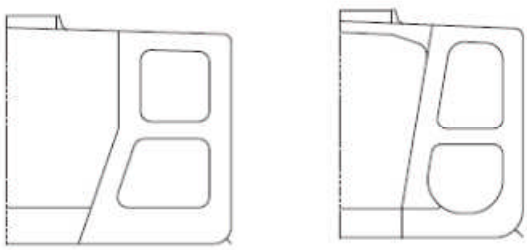

Figure 27.7 Typical Midship sections of Ore Carrier

1.2 Ships built in accordance with the following requirements will get the notation **"ORE CARRIER"** affixed to their character of classification. Entries will be made into the Certificate as to whether specified cargo holds may be empty in case of alternating loading. Additional indications of the types of cargo for which the ship is strengthened may be entered into the Certificate.

1.3 For ships subject to the provisions of this paragraph the requirements of A. are applicable unless otherwise mentioned in this sub-section.

1.4 Section 28, J. applies for ore carriers carrying also oil in bulk.

2. Double Bottom

2.1 The strength of the double bottom structure is to comply with the requirements given in A.5.

2.2 The bottom is to be framed longitudinally within the cargo region.

2.3 Solid floors are to be fitted in line with the transverse primary supporting members in wing tanks and intermediate floors are to be added at mid-span between primary supporting members.

2.4 Scarfing of the double bottom structure into the wing tanks is to be properly ensured. The inner bottom plating is generally to be prolonged within the wing tanks by adequately sized horizontal brackets in way of floors.

3. Transverse and Longitudinal Bulkheads

3.1 Where the form of construction used for transverse bulkheads in wing tanks is different from that used in centre holds, arrangements are to be made to ensure continuity of transverse strength through the longitudinal bulkhead.

3.2 The spacing of transverse bulkheads in the side tanks which are to be used as ballast tanks is to be determined according to Section 28, as for tankers. The spacing of transverse bulkheads in way of the cargo hold is to be determined according to Section 11.

3.3 Longitudinal bulkheads on ore carriers are to be plane with rolled or fabricated longitudinal stiffeners. The bulkhead may be sloped to form a hopper shape in the lower part of the hold or over its full depth.

3.4 Where the upper part of the bulkhead is vertical and the lower part sloped to form a hopper shape, the thickness of the bulkhead plating in way of the knuckle may be required to be increased to resist

transverse compressive buckling stresses. The knuckle is to be arranged in way of a longitudinal.

3.5 The scantlings of the side longitudinal bulkheads are to be at least equal to those required for tankers.

D. Evaluation of Allowable Hold Loading for Non-CSR Bulk Carriers Considering Hold Flooding

1. General

These requirements are to be applied to non-CSR bulk carriers of 150 m in length and upwards, intending to carry solid bulk cargoes having a density of 1.0 t/m^3 or above, and with,

- Single side skin construction, or
- Double side skin construction in which any part of longitudinal bulkhead is located within B/5 or 11.5 m, whichever is less, inboard from the ship's side at right angle to the centreline at the assigned summer load line

The loading in each hold is not to exceed the allowable hold loading in flooded condition, calculated as per 4, using the loads given in 2 and the shear capacity of the double bottom given in 3.

In no case is the allowable hold loading, considering flooding, to be greater than the design hold loading in the intact condition.

These requirements do not apply to CSR Bulk Carriers.

2. Load Model

2.1 General

The loads to be considered as acting on the double bottom are those given by the external sea pressures and the combination of the cargo loads with those induced by the flooding of the hold to which the double bottom belongs to.

The most severe combinations of cargo induced loads and flooding loads are to be used, depending on the loading conditions included in the loading manual:

- Homogeneous loading conditions,
- Non-homogeneous loading conditions,
- Packed cargo conditions (such as steel mill products).

For each loading condition, the maximum bulk cargo density to be carried is to be considered in calculating the allowable hold loading limit.

2.2 Inner bottom flooding head

The flooding head h_f (see Fig. 27.8) is the distance, in [m], measured vertically with the ship in the upright position, from the inner bottom to a level located at a distance d_f is in general:

- **H** for the foremost hold
- 0.9 · **H** for the other holds

For ships less than 50.000 tonnes deadweight with Type B freeboard, d_f is:

- 0.95 · **H** for the foremost hold
- 0.85 · **H** for the other hold

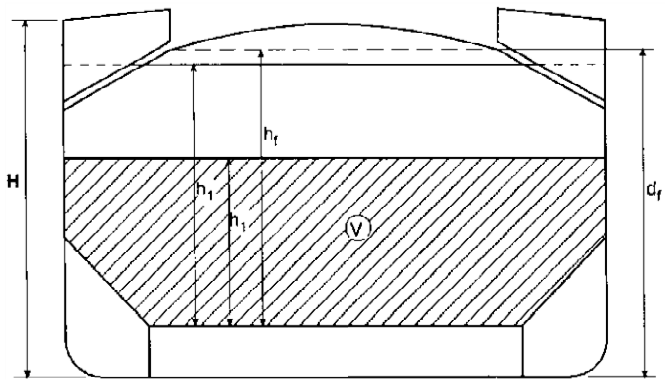

V = Volume of cargo

Figure 27.8 Flooding head h_f of the inner bottom

3. Shear Capacity of the Double Bottom

The shear capacity C of the double bottom is defined as the sum of the shear strength at each end of:

- All floors adjacent to both hoppers, less one half of the strength of the two floors adjacent to each stool, or transverse bulkhead if no stool is fitted (see Fig. 27.9)

- All double bottom girders adjacent to both stools, or transverse bulkheads if no stool is fitted.

Where in the end holds, girders or floors run out and are not directly attached to the boundary stool or hopper girder, their strength is to be evaluated for the one end only.

The floors and girders to be considered are those inside the hold boundaries formed by the hopper and stools (or transverse bulkheads if no stool is fitted). The hopper side girders and the floors directly below the connection of the bulkhead stools (or transverse bulkheads if no stool is fitted) to the inner bottom are not to be included.

When the geometry and/or structural arrangement of the double bottom are such to make the above assumptions inadequate, the shear capacity C of double bottom is to be calculated by direct calculations.

In calculating the shear strength, the net thickness of floors and girders is to be used. The net thickness t_{net}, in [mm], is given by :

$$t_{net} = t - 2.5 \text{ [mm]}$$

t = thickness, in [mm], of floors and girders.

3.1 Floor shear strength

The floor shear strength in way of the floor panel adjacent to hoppers S_{f1}, in [kN], and the floor shear strength in way of the openings in the outmost bay (i.e. that bay which is adjacent to the hopper) S_{f2}, in [kN], are given by the following expressions.

$$S_{f2} = 10^{-3} \cdot Af,h \cdot \frac{\tau_a}{\eta_2}$$

$$S_{f1} = 10^{-3} \cdot Af \cdot \frac{\tau_a}{\eta_1}$$

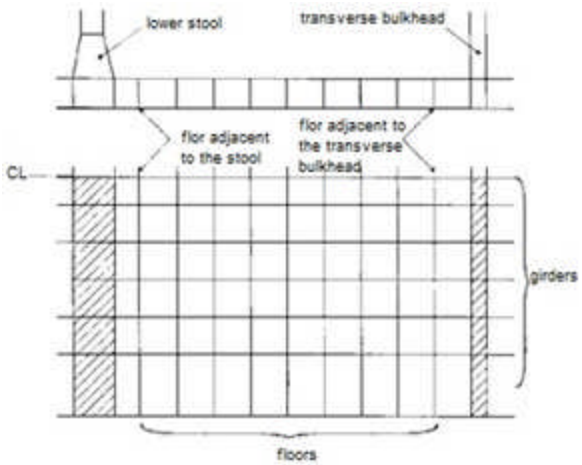

Figure 27.9 Girders and floors in the double bottom

A_f = Sectional area, in [mm^2], of the floor panel adjacent to hoppers,

$A_{f,h}$ = Net sectional area, in [mm^2], of the floor panel in way of the openings in the outmost bay (i.e. that bay which is adjacent to the hopper),

τ_a = Allowable shear stress, in [N/mm^2], to be taken equal to the lesser of.

$$\tau_a \frac{162 \cdot R_{eH}^{0.6}}{\left(\frac{a}{t_{net}}\right)^{0.8}} \quad \text{or} \quad \frac{R_{eH}}{\sqrt{3}}$$

For floors adjacent to the stools or transverse bulkheads, as identified in 3., τ_a may be taken as:

R_{eH} = Minimum upper yield stress, in [N/mm^2], of the hull structural steel,

a = Spacing of stiffening members, in [mm], of panel under consideration,

η_1 = 1.10,

η_2 = 1.20,

= 1.10 where appropriate reinforcement are fitted.

3.2 Girder shear strength

The girder shear strength in way of the girder panel adjacent to stools (or transverse bulkheads, if no stool is fitted) S_{g1}, in [kN], and the girder shear strength in way of the largest opening in the outmost bay (i.e. that bay which is closer to stool, or transverse bulkhead, if no stool is fitted) S_{g2}, in [kN], are given by

$$S_{g1} = 10^{-3} \cdot A_g \cdot \frac{\tau_a}{\eta_1}$$

$$S_{g2} = 10^{-3} \cdot A_{g,h} \cdot \frac{\tau_a}{\eta_2}$$

A_g = Minimum sectional area, in [mm^2], of the girder panel adjacent to stools (or transverse bulkheads, if no stool is fitted)

$A_{g,h}$ = Net sectional are, in [mm^2], of the girder panel in way of the largest opening in the outmost bay (i.e. that bay which is closer to stool, or transverse bulkhead, if no stool is fitted),

τ_a = Allowable shear stress, in [N/mm^2], as given in 3.1

η_1 = 1.10,

η_2 = 1.15,

= 1.10 where appropriate reinforcement are fitted.

4. Allowable Hold Loading

Calculating the allowable hold loading HL, in [t], the following condition must be complied with:

HL = The lesser of HL_1 and HL_2

$$HL_1 = \frac{\rho_c \cdot V}{F}$$

HL_2 = HL_{int}

HL_{int} = Max. perm. hold loading for intact condition,

F = 1.10 in general,

= 1.05 for steel mill products,

ρ_c = Cargo density, in [t/m^3], for bulk cargoes see 2.1,

For steel products, ρ_c is to be taken as the density of steel

V = Volume, in [m^3], occupied by cargo assumed flattened at a level h_1

$$h_1 = \frac{X}{\rho_c \cdot g}$$

For bulk cargoes, X is the lesser of X_1 and X_2 given by:

$$X_1 = \frac{Z + \rho \cdot g \cdot (E - h_f)}{1 + \frac{\rho}{\rho_c}(perm - 1)}$$

$$X_2 = Z + \rho \cdot g\,(E - h_f \cdot perm)$$

perm = Cargo permeability, (i.e. the ratio between the voids within the cargo mass and the volume occupied by the cargo); need not be taken greater than 0.3.

For steel products, X may be taken as X_1 using a value for perm according to the type of products (pipes, flat bars, coils etc.) harmonized with **TL**.

ρ = 1.025 [t/m^3] sea water density,

g = 9.81 [m/sn^2] gravitational acceleration,

E = (Nominal ship) immersion in [m] for flooded hold condition = d_f – 0.1 **H**

Z = The lesser of Z_1 and Z_2;

$$Z_1 = \frac{Ch}{A_{DB,h}} \; [kg/m^2]$$

$$Z_2 = \frac{Ce}{A_{DB,e}} \; [kg/m^2]$$

C_h = Shear capacity of the double bottom, in [kN], as defined in 3., considering, for each floor, the lesser of the shear strengths S_{f1} and S_{f2} (see 3.1) and, for each girder, the lesser of the shear strengths S_{g1} and S_{g2} (see 3.2).

C_e = Shear capacity of the double bottom, in [kN], as defined in 3., considering for each floor, the shear strength S_{f1} (see 3.1) and, for each girder, the lesser of the shear strength S_{g1} and S_{g2} (see 3.2).

$$A_{DB,h} = \sum_{i=1}^{n} S_i \cdot B_{DB,i} \quad [m^2]$$

$$A_{DB,e} = \sum_{i=1}^{n} S_i \cdot (B_{DB} - a_\ell) \quad [m^2]$$

n = Number of floors between stools (or transverse bulkheads, if no stool is fitted)

S_i = Spacing of ith-floor, in [m],

$B_{DB,i}$ = $B_{DB} - a_\ell$ For floors whose shear strength is given by S_{f1} (see 3.1),

$B_{DB,i}$ = $B_{DB,h}$ For floors whose shear strength is given by S_{f2} (see 3.1),

B_{DB} = Breadth of double bottom, in [m], between hoppers (see Fig. 27.10)

$B_{DB,h}$ = Distance, in [m], between the two considered openings (see Fig. 27.10),

a_ℓ = Spacing, in [m], of double bottom longitudinals adjacent to hoppers

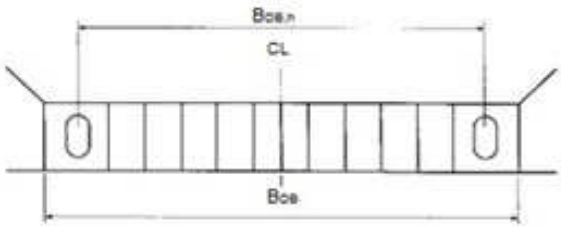

Figure 27.10 Effective distances B_{DB} and $B_{DB,h}$ for the calculation of shear capacity

E. Evaluation of Scantlings of Corrugated Transverse Watertight Bulkheads in Bulk Carriers in Non-CSR Bulk Carriers Considering Hold Flooding

1. Application and Definitions

These requirements are to be applied to non-CSR bulk carriers of 150 m in length and upwards, intending to carry solid bulk cargoes having a density of 1.0 t/m^3, or above, with vertically corrugated transverse watertight bulkheads, and with,

- Single side skin construction, or
- Double side skin construction in which any part of longitudinal bulkhead is located within B/5 or 11.5 m, whichever is less, inboard from the ship's side at right angle to the centreline at the assigned summer load line

The net thickness t_{net} is the thickness obtained by applying the strength criteria given in 4.

The required thickness is obtained by adding the corrosion addition t_k given in 6., to the net thickness t_{net}.

In this requirement, homogeneous loading condition means a loading condition in which the ratio between the highest and the lowest filling ratio, evaluated for each hold, does not exceed 1.20, to be corrected for different cargo densities.

These requirements do not apply to CSR Bulk Carriers.

2. Load Model

2.1 General

The loads to be considered as acting on the bulkheads are those given by the combination of the cargo loads with those induced by the flooding of one hold adjacent to the bulkhead under examination. In any case, the pressure due to the flooding water alone is to be considered.

The most severe combinations of cargo induced loads and flooding loads are to be used for the check of the

scantlings of each bulkhead, depending on the loading conditions included in the loading manual:

- Homogeneous loading conditions

- Non-homogeneous loading conditions

considering the individual flooding of both loaded and empty holds.

The specified design load limits for the cargo holds are to be represented by loading conditions defined in the loading manual.

Non-homogeneous part loading conditions associated with multiport loading and unloading operations for homogeneous loading conditions need not to be considered according to these requirements.

Holds carrying packed cargoes (e.g. steel products) are to be considered as empty holds for this application.

Unless the ship is intended to carry, in non-homogeneous conditions, only iron ore or cargo having bulk density equal to or greater than 1.78 [t/m^3] the maximum mass of cargo which may be carried in the hold shall also be considered to fill that hold up to the upper deck level.

2.2 Bulkhead corrugation flooding head

The flooding head h_f (see Fig. 27.11) is the distance, in [m], measured vertically with the ship in the upright position, from the calculation point to a level located at a distance d_f in [m], from the baseline:

d_f is in general;

- **H** For the aft transverse corrugated bulkhead of the foremost hold,

- 0.9 · **H** For the other bulkheads.

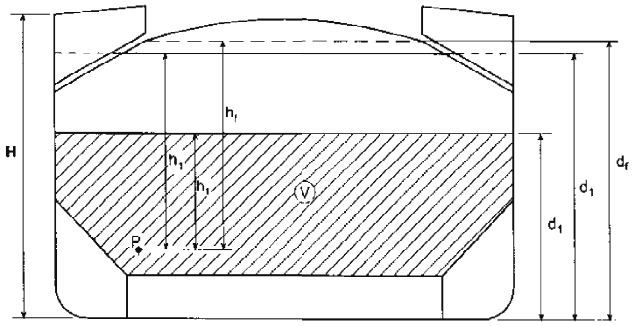

V = Volume of cargo
P = Calculation point

Figure 27.11 Flooding head h_f of a corrugated bulkhead

Where the ship is to carry cargoes having bulk density less than 1.78 [t/m^3] in non-homogeneous loading conditions, the following values can be assumed for d_f:

- 0.95 · **H** For the aft transverse corrugated bulkhead of the foremost hold

- 0.85 · **H** For the other bulkheads

For ships less than 50.000 tonnes deadweight with Type B freeboard d_f is:

- 0.95 · **H** For the aft transverse corrugated bulkhead of the foremost hold

- 0.85 · **H** For the other bulkheads

Where the ship is to carry cargoes having bulk density less than 1.78 [t/m^3] in non-homogeneous loading conditions, the following values can be assumed:

- 0.9 · **H** For the aft transverse corrugated bulkhead of the foremost hold

- 0.8 · H For the other bulkheads.

2.3 Pressure in the non-flooded bulk cargo loaded holds

At each point of the bulkhead in way of length ℓ according to Figure 27.12a and 27.12b the pressure p_c, in [kN/m^2], is given by:

$$p_c = \rho_c \cdot g \cdot h_1 \cdot n$$

ρ_c = Bulk cargo density, in [t/m^3],

g = 9.81 [m/sn^2], gravitational acceleration

h_1 = Vertical distance, in [m], from the calculation point to the horizontal plane corresponding to the level height of the cargo (see Fig. 27.11), located at a distance d_1 in [m], from the baseline.

n = $\tan^2\left(45^\circ - \frac{\gamma}{2}\right)$

γ = Angle of repose of the cargo, in degrees, that may generally be taken as 35° for iron ore and 25° for cement.

The force F_c, in [kN], acting on a corrugation is given by:

$$F_c = \rho_c \cdot g \cdot e_1 \frac{(d_1 - h_{DB} - h_{LS})^2}{2} \tan^2\gamma$$

e_1 = Spacing of corrugations, in [m] (see Fig. 27.12a),

h_{LS} = Mean height of the lower stool, in [m], from the inner bottom,

h_{DB} = Height of the double bottom, in [m].

2.4 Pressure in the flooded holds

2.4.1 Bulk cargo holds

Two cases are to be considered, depending on the values of d_1 and d_f.

2.4.1.1 $d_f \geq d_1$

At each point of the bulkhead located at a distance between d_1 and d_f from the baseline, the pressure $p_{c,f}$ in [kN/m^2], is given by:

$$p_{c,f} = \rho \cdot g \cdot h_f$$

ρ = 1.025 [t/m^3], sea water density

At each point of the bulkhead located at a distance lower than d_1 from the baseline, the pressure $p_{c,f}$ in [kN/m^2], is given by:

$$p_{c,f} = \rho \cdot g \cdot h_f + [\rho_c - \rho\,(1\text{-perm})] \cdot g \cdot h_1 \cdot \tan^2\gamma$$

perm = Permeability of cargo, to be taken as 0,3 for ore (corresponding bulk cargo density for iron ore may generally be taken as 3,0 [t/m^3]), coal cargoes and for cement (corresponding bulk cargo density for cement may generally be taken as 1.3 [t/m^3]).

The force $F_{c,f}$, in [kN], acting on a corrugation is given by:

$$F_{c,f} = e_1 \cdot \left[\rho \cdot g \cdot \frac{(d_f - d_1)^2}{2} + \frac{\rho \cdot g(d_f - d_1) + (p_{c,f})_{1e}}{2}(d_1 - h_{DB} - h_{LS})\right]$$

$(p_{c,f})_{1e}$ = Pressure, in [kN/m^2], at the lower end of the corrugation.

2.4.1.2 $d_f < d_1$

At each point of the bulkhead located at a distance between d_f and d_1 from the baseline, the pressure $p_{c,f}$ in [kN/m^2], is given by:

$$p_{c,f} = \rho_c \cdot g \cdot h_1 \cdot \tan^2\gamma$$

At each point of the bulkhead located at a distance lower than d_f from the baseline, the pressure $p_{c,f}$, in [kN/m^2] is given by:

$$p_{c,f} = \rho \cdot g \cdot h_f + [\rho_c \cdot h_1 - \rho\,(1\text{-perm}) \cdot h_f] \cdot g \cdot \tan^2\gamma$$

The force $F_{c,f}$, in [kN], acting on a corrugation is given by:

$$F_{c,f} = e_1 \cdot \left[\rho_C \cdot g \cdot \frac{(d_1 - d_f)^2}{2} \tan^2\gamma + \frac{\rho_C \cdot g\,(d_1 - d_f) \cdot \tan^2\gamma + (p_{c,f})_{1e}}{2} (d_f - h_{DB} - h_{LS}) \right]$$

2.4.2 Pressure in empty holds due to flooding water alone

At each point of the bulkhead, the hydrostatic pressure p_f induced by the flooding head h_f is to be considered.

The force F_f, in [kN], acting on a corrugation is given by:

$$F_f = e_1 \cdot \rho \cdot g \frac{(d_f - h_{DB} - h_{LS})^2}{2}$$

2.5 Resultant pressure and force

2.5.1 Homogeneous loading conditions

At each point of the bulkhead structures, the resultant pressure p, in [kN/m^2], to be considered for the scantlings of the bulkhead is given by:

$$p = p_{c,f} - 0.8 \cdot p_c$$

The resultant force, F, in [kN, acting on a corrugation is given by:

$$F = F_{c,f} - 0.8 \cdot F_c$$

2.5.2 Non homogeneous loading conditions

At each point of the bulkhead structures, the resultant pressure p, in [kN/m^2], to be considered for the scantlings of the bulkhead is given by:

$$p = p_{c,f}$$

The resultant force F, in [kN], acting on a corrugation is given by:

$$F = F_{c,f}$$

3. Bending Moment and Shear Force in the Bulkhead Corrugations

The bending moment M and the shear force Q in the bulkhead corrugations are obtained using the formulae given in 3.1 and 3.2. The M and Q values are to be used for the checks in 4.2.

3.1 Bending moment

The design bending moment M, in [kN · m], for the bulkhead corrugations is given by:

$$M = \frac{F \cdot \ell}{8}$$

F = Resultant force, in [kN], as given in 2.5

ℓ = Span of the corrugation, in [m], to be taken according to Fig. 27.12a and 27.12b.

3.2 Shear force

The shear force Q, in [kN], at the lower end of the bulkhead corrugations is given by:

$$Q = 0.8 \cdot F$$

F = As given in 2.5.

4. Strength Criteria

4.1 General

The following criteria are applicable to transverse bulkheads with vertical corrugations (see Fig. 27.12a). For ships of 190 m. of length and above, these bulkheads are to be fitted with a bottom stool, and generally with a top stool below deck. For smaller ships, corrugations may extend from inner bottom to deck. However, if any stools are fitted, they are to comply with the requirements in 4.1.1 and 4.1.2. See also B.8.4.

The corrugation angle Φ shown in Fig. 27.12a is not to be less than 55°.

Requirements for local net plate thickness are given in 4.7.

In addition, the criteria as given in 4.2 and 4.5 are to be complied with.

The thicknesses of the lower part of corrugations considered in the application of 4.2 and 4.3 are to be maintained for a distance from the inner bottom (if no lower stool is fitted) or the top of the lower stool not less than 0.15 · ℓ.

The thicknesses of the middle part of corrugations as considered in the application of 4.2 and 4.4 are to be maintained to a distance from the deck (if no upper stool is fitted) or the bottom of the upper stool not greater than 0.3 · ℓ.

The section modules of the corrugated in the remaining upper part of the bulkhead is not to be less than 75% of that required for the middle part, corrected for different yield stresses.

4.1.1 Lower stool

The height of the lower stool is generally to be not less than 3 times the depth of the corrugations. The thickness and material of the stool top plate is not to be less than those required for the bulkhead plating above. The thickness and material of the upper portion of vertical or sloping stool side plating within the depth equal to the corrugation flange width from the stool top is not to be less than the required flange plate thickness and material to meet the bulkhead stiffness requirement at lower end of corrugation. The thickness of the stool side plating and the section modulus of the stool side stiffeners is not to be less than those required according to Section 11, B. on the basis of the load model in 2. The ends of stool side vertical stiffeners are to be attached to brackets at the upper and lower ends of the stool.

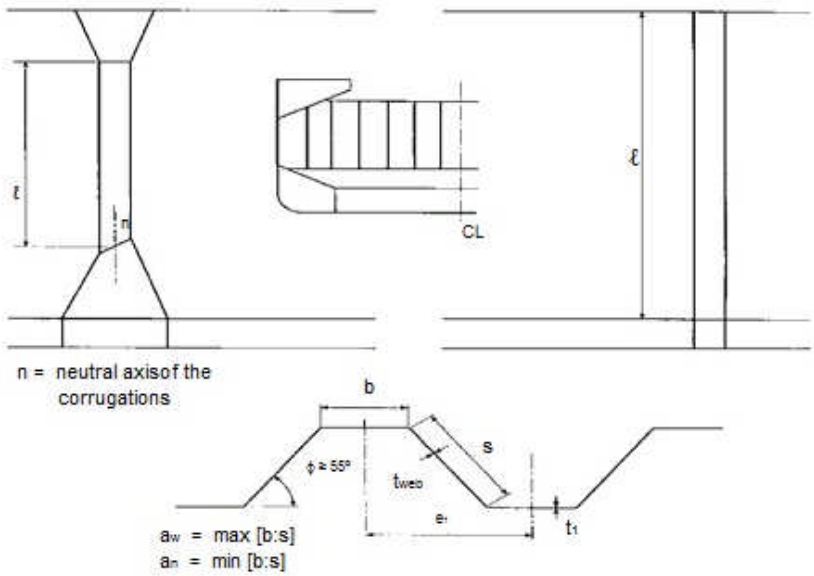

Figure 27.12a Span ℓ of the corrugation (longitudinal section)

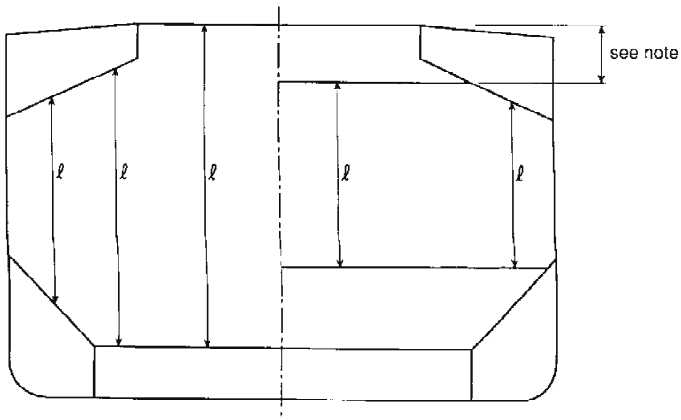

Note : For the definition of the internal end of the puper stool is not to be taken more than a distance from the deck at the centre line equal to

- 3 times the depth of corrugations, in general
- 2 times the depth of corrugations, for rectangular stool

Figure 27.12b Span ℓ of the corrugation (transverse section)

The distance form the edge of the stool top plate to the surface of the corrugation flange is to be not less than the corrugation flange plate thickness, measured from the intersection of the outer edge of corrugated flanges and the center line of the stool top plate, see Fig. 27.15. The stool bottom is to be installed in line with double bottom floors and is to have a width not less than 2.5 times the mean depth of the corrugation. The stool is to be fitted with diaphragms in line with the longitudinal double bottom girders for effective support of the corrugated bulkhead. Scallops in the brackets and diaphragms in way of the connections to the stool top plate are to be avoided.

Where corrugations are cut at the lower stool, corrugated bulkhead plating is to be connected to the stool top plate by full penetration welds. The stool side plating is to be connected to the stool top plate and the inner bottom plating by either full penetration or deep penetration welds, see Fig. 27.16. The supporting floors are to be connected to the inner bottom by either full penetration or deep penetration welds, see Fig. 27.16.

4.1.2 Upper stool

The upper stool, where fitted, is to have a height generally between 2 and 3 times the depth of corrugations. Rectangular stools are to have a height generally equal to 2 times the depth of corrugations, measured from the deck level and at hatch side girder. The upper stool is to be properly supported by girders or deep brackets between the adjacent hatch-end beams.

The width of the stool bottom plate is generally to be the same as that of the lower stool top plate. The stool top of non rectangular stools is to have a width not les then 2 times the depth of corrugations. The thickness and material of the stool bottom plate are to be the same as those of the bulkhead, plating below. The thickness of the lower portion of stool side plating is not to be less than 80% of that required for the upper part of the bulkhead plating where the same material is used. The thickness of the stool side plating and the section modules of the stool side stiffeners is not to be less than required according to Section 11, B. on the basis of the load model in 2. The ends of stool side stiffeners are to be attached to brackets at the upper and lower ends of the stool. Diaphragms are to be fitted inside the stool in line with and effectively attached to longitudinal deck girders extending to the hatch end coaming girders for effective support of the corrugated bulkhead. Scallops in the brackets and diaphragms in way of the connection to the stool bottom plate are to be avoided.

4.1.3 Alignment

At deck, if no stool is fitted, two transverse reinforced beams are to be fitted in line with the corrugation flanges.

At bottom, if no stool is fitted, the corrugation flanges are to be in line with the supporting floors. Corrugated bulkhead plating is to be connected to the inner bottom plating by full penetration welds. The plating of supporting floors is to be connected to the inner bottom by either full penetration or deep penetration welds, see Fig. 27.16. The thickness and material properties of the supporting floors are to be at least equal to those provided for the corrugation flanges.

Moreover, the cut-outs for connections of the inner bottom longitudinal to double bottom floors are to be closed by collar plates. The supporting floors are to be connected to each other by suitably designed shear plates.

Stool side plating is to align with the corrugation flanges and stool side vertical stiffeners and their brackets in lower stool are to align with the inner bottom longitudinal to provide appropriate load transmission between these stiffening members. Stool side plating is not to be knuckled anywhere between the inner bottom plating and the stool top.

4.2 Bending capacity and shear stress τ

The bending capacity is to comply with the following relationship:

M = Bending moment, in [kN · m], as given in 3.1

W_{1e} = Section modulus of one half pitch corrugation, in [cm^3],at the lower end of corrugations, to be calculated according to 4.3,

W_m = Section modulus of one half pitch corrugation, in [cm^3], at the mid-span of corrugations, to be calculated according to 4.4,

$\sigma_{a,1e}$ = Allowable stress, in [N/mm^2], as given in 4.5, for the lower end of corrugations

$\sigma_{a,m}$ = Allowable stress, in [N/mm^2], as given in 4.5, for the mid-span of corrugations.

In no case is W_m to be taken greater than the lesser of $1.15 \cdot W_{1e}$ and $1.15 \cdot W'_{1e}$ for calculation of the bending capacity, W'_{1e} being defined below.

In case shedders plates are fitted which:

- Are not knuckled,
- Are welded to the corrugations and the top of the lower stool by one side penetration welds or equivalent,
- Are fitted with a minimum slope of 45° and their lower edge is in line with the stool side plating,
- Have thicknesses not less than 75% of that provided by the corrugation flange,
- And material properties at least equal to those provided by the flanges,

or gusset plates are fitted which:

- Are in combination with shedder plates having thickness, material properties and welded connections in accordance with the above requirements,
- Have a height not less than half of the flange width,
- Are fitted in line with the stool side plating,
- Are generally welded to the top of the lower stool by full penetration welds, and to the corrugations and shedder plates by one side penetration welds or equivalent,
- Have thickness and material properties at least equal to those provided for the flanges,

the section modules W_{1e} in [cm^3], is to be taken not larger than the value W'_{1e} in [cm^3], given by:

$$W_{1e} = W_g + 10^3 \frac{Q \cdot h_g - 0.5 \cdot h_g^2 \cdot e_1 \cdot p_g}{\sigma_a}$$

W_g = Section modulus of one half pitch corrugation, in [cm^3], of the corrugations calculated, according to 4.4, in way of the upper end of shedder or gusset plates, as applicable

Q = Shear force, in [kN], as given in 3.2,

h_g = Height, in [m], of shedders or gusset plates, as applicable (see Figures 27.13 and 27.14),

e_1 = As given in 2.3,

p_g = Resultant pressure, in [kN/m^2], as defined in 2.5, calculated in way of the middle of the shedders or gusset plates, as applicable,

σ_a = Allowable stress, in [N/mm^2], as given in 4.5.

Stresses τ are obtained by dividing the shear force Q by the shear area. The shear area is to be reduced in order to account for possible non-perpendicularity between the corrugation webs and flanges. In general the reduced shear area may be obtained by multiplying the web sectional area by (sin Φ), Φ being the angle between the web and the flange (see Fig. 27.12a).

When calculating the section modulus and the shear area, the net plate thicknesses are to be used.

The section modulus of corrugations are to be calculated on the basis of the following requirements given in 4.3 and 4.4.

4.3 Section modules at the lower end of corrugations

The section modulus is to be calculated with the compression flange having an effective flange width b_{ef} not larger than as given in 4.6.1.

If the corrugation webs are not supported by local brackets below the stool top (or below the inner bottom) in the lower part, the section modules of the corrugations is to be calculated considering the corrugation webs 30% effective.

4.3.1 Provided that effective shedder plates, as defined in 4.2, are fitted (see Fig. 27.13), when calculating the section modulus of corrugations at the lower end (cross-section 1 in Fig. 27.13), the area of flange plates, in [cm^2], may be increased by

$$\Delta A_f = (2.5 \cdot b \cdot \sqrt{t_f \cdot t_{sh}}\ [cm^2]$$

(Not to be taken greater than $2.5 \cdot b \cdot t_f$)

b = Width, in [m], of the corrugation flange (see Fig. 27.12a),

t_{sh} = Net shedder plate thickness, in [mm],

t_f = Net flange thickness [mm].

4.3.2 Provided that effective gusset plates, as defined in 4.2, are fitted (see Fig. 27.14), when calculating the section modulus of corrugations at the lower end (cross-section 1 in Fig. 27.14), the area of flange plates, in [cm^2], may be increased by;

$$\Delta A_f = (7 \cdot h_g \cdot t_f)\ [cm^2]$$

h_g = Height of gusset plate in [m], see Fig. 27.14, not to be taken greater than:

$$h_g = \left(\frac{10}{7} \cdot a_{gu}\right)\ [m]$$

a_{gu} = Width of the gusset plates, in [m],

a_{gu} = $2e_1 - b$,

t_f = Net flange thickness, in [mm], based on the as built condition.

4.3.3 If the corrugation webs are welded to a sloping stool top plate which has an angle not less than 45° with the horizontal plane, the section modulus of the corrugations may be calculated considering the corrugation webs fully effective. In case effective gusset plates are fitted, when calculating the section modulus of corrugations the area of flange plates may be increased as specified in 4.3.2. No credit can be given to shedder plates only.

For angles less than 45°, the effectiveness of the web may be obtained by linear interpolation between %30 for 0° and 100% for 45°.

4.4 Section modules of corrugations at cross-sections other than the lower end

The section modulus is to be calculated with the corrugation webs considered effective and the compression flange having an effective flange width, b_{ef}, not larger than as given in 4.6.1.

4.5 Allowable stress check

The normal and shear stresses σ and τ are not to exceed the allowable values σ_a and τ_a, [N/mm^2], given by:

$$\sigma_a = R_{eH}$$

$$\tau_a = 0.5 \cdot R_{eH}$$

R_{eH} = The minimum upper yield stress, in [N/mm^2], of the hull structural steel.

4.6 Effective compression flange width and shear buckling check

4.6.1 Effective width of the compression flange of corrugations

The effective width b_{ef} in [m], of the corrugation flange is calculated according to Section 3, B.4.

4.6.2 Shear buckling

The buckling check for the web plates at the corrugation ends is to be performed according to Section 3, B.4. The buckling factor is to be taken as follows:

$$K = 6.34 \cdot \sqrt{3}$$

The shear stress τ, has to be taken according to 4.2 and safety factor S is 1.05.

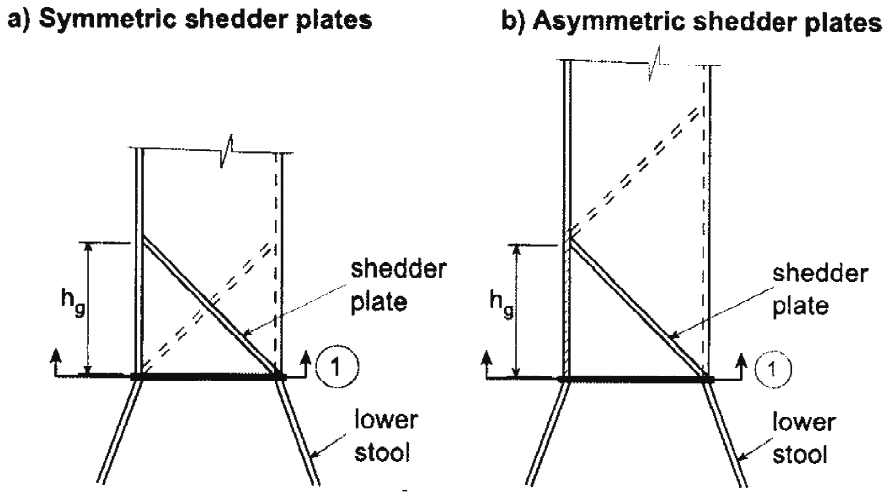

Figure 27.13 Shedder plates

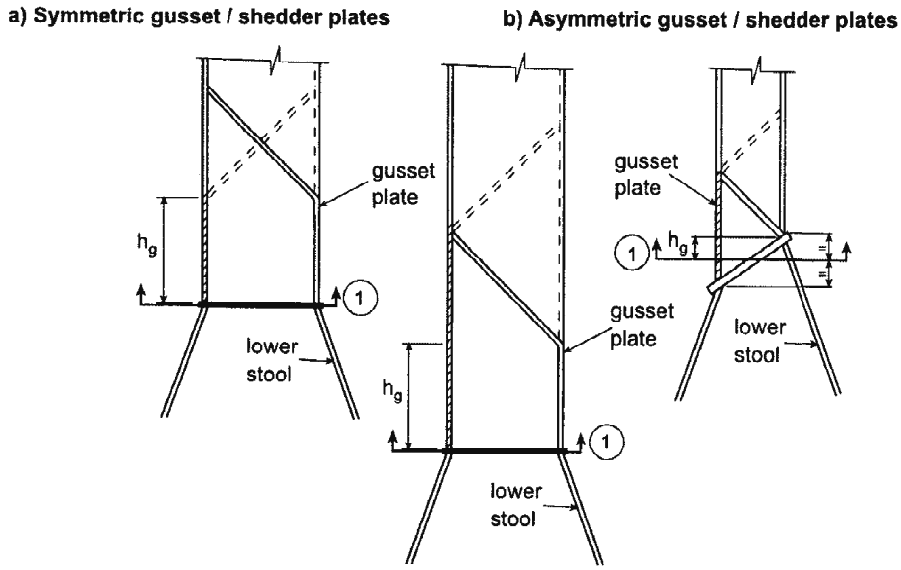

Figure 27.14 Gusset plates and shedder plates

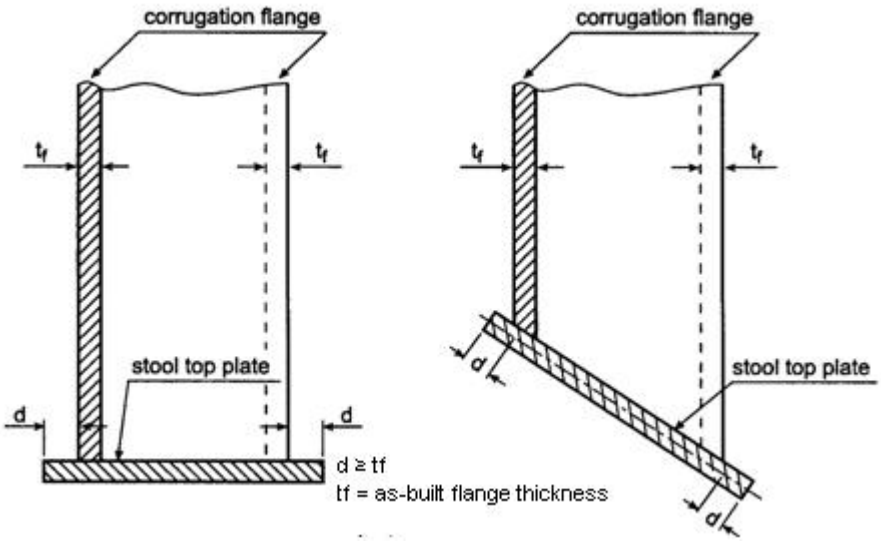

Fig. 27.15 Excess end d of the stool top plate

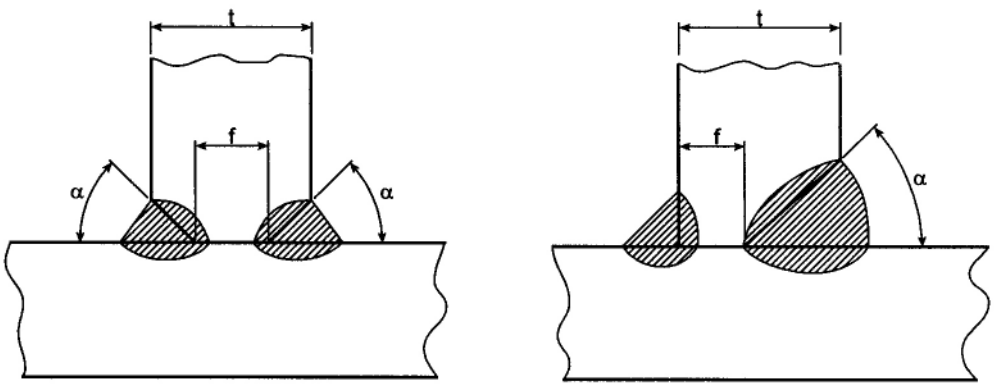

Root face f : 3 mm to t/3 mm

Groove angle α : 40° to 60°

Fig. 27.16 Connection by deep penetration welds

4.7 Local net plate thickness

The bulkhead local net plate thickness t_{net} in [mm], is given by:

$$t_{net} = 14.9 \cdot a_w \cdot \sqrt{\frac{1.05 \cdot p}{R_{eH}}}$$

a_w = Plate width [m], to be taken equal to the width of the corrugation flange or web, whichever is the greater see Fig. 27.12a,

p = Resultant pressure, in [kN/m^2], as defined in 2.5, at the bottom of each strake of plating; in all cases, the net thickness of the lowest strake is to be determined using the resultant, pressure at the top of the lower stool, or at the inner bottom, if no lower stool is fitted or at the top of shedders, if shedder or gusset/shedder plates are fitted.

For built-up corrugation bulkheads, when the thickness of the flange and web are different, the net thickness of the narrower plating is to be not less than $t_{net,n}$ in [mm], given by:

$$t_{net,n} = 14.9 \cdot a_n \cdot \sqrt{\frac{1.05 \cdot p}{R_{eH}}}$$

a_n = The width, in [m], of the narrower plating (see Fig. 27.12a).

The net thickness of the wider plating, in [mm], is not to be taken less than the maximum of the following values t_{w1} and t_{w2}:

$$t_{w1} = 14.9 \cdot a_w \cdot \sqrt{\frac{1,05 \cdot p}{R_{eH}}}$$

$$t_{w2} = \sqrt{\frac{440 \cdot a_w^2 \cdot 1.05 \cdot p}{R_{eH}} - t_{np}^2}$$

where; t_{np} ≤ actual net thickness of the narrower plating and not to be greater than t_{w1}.

5. Shedder and Gussed Plates

The thickness and stiffening of effective gusset and shedder plates, as defined in 4.3, is to be determined according to Section 11, B.1 and 2. on the basis of the load model in 2.

6. Corrosion Addition and Steel Renewal

The corrosion addition t_K is to be taken equal to 3.5 mm.

F. Harmonised Notations and Corresponding Design Loading Conditions for Bulk Carriers

1. Application

1.1 These requirements are applicable to bulk carriers as defined in B having a length L of 150 m or above. The consideration of the following requirements is recommended for ships having a length L < 150 m.

1.2 The loading conditions listed under 3. are to be checked regarding longitudinal strength as required by Section 6, local strength, capacity and disposition of ballast tanks and stability. The loading conditions listed under 4. are to be checked regarding local strength.

1.3 For the purpose of applying the conditions given in this document, maximum draught is to be taken as moulded summer load line draught.

1.4 These requirements are not intended to prevent any other loading conditions to be included in the loading manual for which calculations are to be submitted as required in Section 6, nor is it intended to replace in any way the required loading manual / instrument.

1.5 A bulk carrier may in actual operation be loaded differently from the design loading conditions specified in the loading manual, provided limitations for longitudinal and local strength as defined in the loading manual and loading instrument onboard and applicable stability requirements are not exceeded.

2. Harmonized Notations and Annotations

2.1 Notations

Bulk Carriers are to be assigned one of the following notations.

BC-A = for bulk carriers designed to carry dry bulk cargoes of cargo density 1.0 tonne/m^3 and above with specified holds empty at maximum draught in addition to **BC-B** conditions.

BC-B = for bulk carriers designed to carry dry bulk cargoes of cargo density of 1.0 tonne/m^3 and above with all cargo holds loaded in addition to **BC-C** conditions.

BC-C = for bulk carriers designed to carry dry bulk cargoes of cargo density less than 1.0 tonne/m^3.

2.2 Additional Notations

The following additional Notations are to be provided giving further detailed description of limitations to be observed during operation as a consequence of thedesign loading condition applied during the design in the following cases:

- **{maximum cargo density ... t/m^3}** for Notations **BC-A** and **BC-B** if the maximum cargo density is less than 3.0 tonnes/m^3

- **{no MP}** for all Notations when the vessel has not been designed for loading and unloading in multiple ports in accordance with the conditions specified in 5.3

- **{holds, a, b, ... may be empty}** for Notation **BC-A**

3. Design Loading Conditions (General)

3.1 BC-C

Homogeneous cargo loaded condition where the cargo density corresponds to all cargo holds, including hatchways, being 100 % full at maximum draught with all ballast tanks empty.

3.2 BC-B

As required for **BC-C**, plus:

Homogeneous cargo loaded condition with cargo density 3.0 tonnes/m^3, and the same filling ratio (cargo mass/hold cubic capacity) in all cargo holds at maximum draught with all ballast tanks empty.

In cases where the cargo density applied for this design loading condition is less than 3.0 tonnes/m^3, the maximum density of the cargo that the vessel is allowed to carry is to be indicated with the additional Notation **{maximum cargo density ... t/ m^3}**.

3.3 BC-A

As required for **BC-B**, plus:

At least one cargo loaded condition with specified holds empty, with cargo density 3.0 tonnes/m^3, and the same filling ratio (cargo mass/hold cubic capacity) in all loaded cargo holds at maximum draught with all ballast tanks empty.

The combination of specified empty holds shall be indicated with the additional Notation **{holds a, b, ... may be empty}**.

In such cases where the design cargo density applied is less than 3,0 tonnes/m^3, the maximum density of the cargo that the vessel is allowed to carry shall be indicated within the additional Notation, e.g. **{holds a, b, ... may be empty; maximum cargo density t/m^3}**.

3.4 Ballast conditions (applicable to all Notations)

3.4.1 Ballast tank capacity and disposition

All bulk carriers are to have ballast tanks of sufficient capacity and so disposed to at least fulfill the following requirements:

Normal ballast condition

Normal ballast condition for the purpose of these requirements is a ballast (no cargo) condition where:

- The ballast tanks may be full, partially full or empty. Where partially full option is exercised, the conditions in Section 6, H.3.1.1 are to be complied with

- Any cargo hold or holds adapted for the carriage of water ballast at sea are to be empty

- The propeller is to be fully immersed

- The trim is to be by the stern and is not to exceed 0.015 **L**, where L is the length between perpendiculars of the ship

In the assessment of the propeller immersion and trim, the draughts at the forward and after perpendiculars may be used.

Heavy ballast condition

Heavy ballast condition for the purpose of these requirements is a ballast (no cargo) condition where:

- The ballast tanks may be full, partially full or empty. Where partially full option is exercised, the conditions in Section 6, H.3.1.1 are to be complied with,

- At least one cargo hold adapted for carriage of water ballast at sea, where required or provided, is to be full,

- The propeller immersion I/D is to be at least 60 % where:

I = The distance from propeller centerline to the waterline

D = Propeller diameter, and

- The trim is to be by the stern and is not to exceed 0.015 L, where L is the length between perpendiculars of the ship,

- The moulded forward draught in the heavy ballast condition is not to be less than the smaller of 0.03 L or 8 m.

3.4.2 Strength requirements

All bulk carriers are to meet the following strength requirements:

Normal ballast condition:

- The structures of bottom forward are to be strengthened in accordance with the **TL** Rules against slamming for the condition at the lightest forward draught,

- The longitudinal strength requirements according to Section 6, B. are to be met for the condition of 3.4.1 for normal ballast, and

- In addition, the longitudinal strength requirements of according to Section 6, B. are to be met with all ballast tanks 100 % full.

Heavy ballast condition:

- The longitudinal strength requirements according to Section 6, B. are to be met for the condition of 3.4.1 for heavy ballast

- In addition, the longitudinal strength requirements according to Section 6, B. are to be met with all ballast tanks 100 % full and any one cargo hold adapted for the carriage of water ballast at sea, where provided, 100 % full

- Where more than one hold is adapted and designated for the carriage of water ballast at sea, it will not be required that two or more holds be assumed 100 % full simultaneously in the longitudinal strength assessment, unless such conditions are expected in the heavy ballast condition. Unless each hold is individually investigated, the designated heavy ballast hold and any/all restrictions for the use of other ballast hold(s) are to be indicated in the loading manual.

4. Departure and Arrival Conditions

Unless otherwise specified, each of the design loading conditions defined in 3.1 to 3.4 is to be investigated for the arrival and departure conditions as defined below.

Departure condition: with bunker tanks not less than 95 % full and other consumables 100 %

Arrival condition: with 10% of consumables

5. Design Loading Conditions (For Local Strength)

5.1 Definitions

The maximum allowable or minimum required cargo mass in a cargo hold, or in two adjacently loaded holds, is related to the net load on the double bottom. The net load on the double bottom is a function of draft, cargo mass in the cargo hold, as well as the mass of fuel oil and ballast water contained in double bottom tanks.

The following definitions apply:

M_H = The actual cargo mass in a cargo hold corresponding to a homogeneously loaded condition at maximum draught

M_{Full} = The cargo mass in a cargo hold corresponding to cargo with virtual density (homogeneous mass/hold cubic capacity, minimum 1.0 tonne/m^3) filled to the top of the hatch coaming. M_{Full} is in no case to be less than M_H.

M_{HD} = The maximum cargo mass allowed to be carried in a cargo hold according to design loading condition(s) with specified holds empty at maximum draught

5.2 General conditions applicable for all Notations

5.2.1 Any cargo hold is to be capable of carrying M_{Full} with fuel oil tanks in double bottom in way of the cargo hold, if any, being 100 % full and ballast water tanks in the double bottom in way of the cargo hold being empty, at maximum draught.

5.2.2 Any cargo hold is to be capable of carrying minimum 50 % of M_H, with all double bottom tanks in way of the cargo hold being empty, at maximum draught.

5.2.3 Any cargo hold is to be capable of being empty, with all double bottom tanks in way of the cargo hold being empty, at the deepest ballast draught.

5.3 Condition applicable for all Notations, except when Notation {no MP} is assigned

5.3.1 Any cargo hold is to be capable of carrying M_{Full} with fuel oil tanks in double bottom in way of the cargo hold, if any, being 100 % full and ballast water tanks in the double bottom in way of the cargo hold being empty, at 67 % of maximum draught.

5.3.2 Any cargo hold is to be capable of being empty with all double bottom tanks in way of the cargo hold being empty, at 83 % of maximum draught.

5.3.3 Any two adjacent cargo holds are to be capable of carrying M_{Full} with fuel oil tanks in double bottom in way of the cargo hold, if any, being 100 % full and ballast water tanks in the double bottom in way of the cargo hold being empty, at 67 % of the maximum draught. This requirement to the mass of cargo and fuel oil in double bottom tanks in way of the cargo hold applies also to the condition where the adjacent hold is fitted with ballast, if applicable.

5.3.4 Any two adjacent cargo holds are to be capable of being empty, with all double bottom tanks in way of the cargo hold being empty, at 75 % of maximum draught.

5.4 Additional conditions applicable for BC-A Notation only

5.4.1 Cargo holds, which are intended to be empty at maximum draught, are to be capable of being empty with all double bottom tanks in way of the cargo hold also being empty.

5.4.2 Cargo holds, which are intended to be loaded with high density cargo, are to be capable of carrying M_{HD} plus 10 % of M_H, with fuel oil tanks in the double bottom in way of the cargo hold, if any, being 100 % full and ballast water tanks in the double bottom being empty in way of the cargo hold, at maximum draught. In operation the maximum allowable cargo mass shall be limited to M_{HD}.

5.4.3 Any two adjacent cargo holds which according to a design loading condition may be loaded with the next holds being empty, are to be capable of carrying 10% of M_H in each hold in addition to the maximum cargo load according to that design loading condition, with fuel oil tanks in the double bottom in way of the cargo hold, if any, being 100 % full and ballast water tanks in the double bottom in way of the cargo hold being empty, at maximum draught. In operation the maximum allowable mass shall be limited to the maximum cargo load according to the design loading conditions.

5.5 Additional conditions applicable for ballast hold(s) only

5.5.1 Cargo holds, which are designed as ballast water holds, are to be capable of being 100 % full of ballast water including hatchways, with all double bottom tanks in way of the cargo hold being 100 % full, at any heavy ballast draught. For ballast holds adjacent to topside wing, hopper and double bottom tanks, it shall be strength wise acceptable that the ballast holds are filled when the topside wing, hopper and double bottom tanks are empty.

5.6 Additional conditions applicable during loading and unloading in harbour only

5.6.1 Any single cargo hold is to be capable of holding the maximum allowable seagoing mass at 67 % of maximum draught, in harbour condition.

5.6.2 Any two adjacent cargo holds are to be capable of carrying M_{Full} ,with fuel oil tanks in the double bottom in way of the cargo hold, if any, being 100 % full and ballast water tanks in the double bottom in way of the cargo hold being empty, at 67 % of maximum draught, in harbour condition.

5.6.3 At reduced draught during loading and unloading in harbour, the maximum allowable mass in a cargo hold may be increased by 15 % of the maximum mass allowed at the maximum draught in seagoing condition, but shall not exceed the mass allowed at maximum draught in the seagoing condition. The minimum required mass may be reduced by the same amount.

5.7 Hold mass curves

Based on the design loading criteria for local strength, as given in 5.2 to 5.6 (except 5.5.1) above, hold mass curves are to be included in the loading manual and the loading instrument, showing maximum allowable and minimum required mass as a function of draught in sea-going condition as well as during loading and unloading in harbour, see A.10.

At other draughts than those specified in the design loading conditions above, the maximum allowable and minimum required mass is to be adjusted for the change in buoyancy acting on the bottom. Change in buoyancy is to be calculated using water plane area at each draught.

Hold mass curves for each single hold, as well as for any two adjacent holds, are to be included.

G. Scantling of Hatch Covers and Hatch Coamings

1. Application

These requirements apply to all bulk carriers, ore carriers and combination carriers and are for all cargo hatch covers and hatch forward and side coamings on exposed decks in position 1, as defined in ICLL.

The strength requirements are applicable to hatch covers and hatch coamings of stiffened plate construction. The secondary stiffeners and primary supporting members of the hatch covers are to be continuous over the breadth and length of the hatch covers, as far as practical. When this is impractical, sniped end connections are not to be used and appropriate arrangements are to be adopted to ensure sufficient load carrying capacity.

The spacing of primary supporting members parallel to the direction of secondary stiffeners is not to exceed 1/3 of the span of primary supporting members.

The secondary stiffeners of the hatch coamings are to be continuous over the breadth and length of the hatch coamings.

These requirements are in addition to the requirements of the ICLL.

Material for the hatch covers and coamings is to be steel according to the requirements for ship's hull.

2. Hatch Cover Load Model

The pressure p, in kN/m2, on the hatch covers panels is given by:

For ships of 100 m in length and above

$$p = 34.3 + \frac{p_{FP} - 34.3}{0.25}\left(0.25 - \frac{x}{L}\right) \geq 34.3$$

for hatch ways located at the freeboard deck

where:

p_{FP} = Pressure at the forward perpendicular

= 49.1 + (L-100)a

a = 0.0726 for type B freeboard ships

0.356 for ships with reduced freeboard

L = Freeboard length, in m, as defined in Regulation 3 of Annex I to the 1966 Load Line Convention as modified by the Protocol of 1988, to be taken not greater than 340 m

x = Distance, in m, of the mid length of the hatch cover under examination from the forward end of L

Where a position 1 hatchway is located at least one superstructure standard height higher than the freeboard deck, the pressure p may be 34.3kN/m^2.

For ships less than 100 m in length:

$$p = 15.8 + \frac{L}{3}\left(1 - \frac{5}{3}\cdot\frac{x}{L}\right) - 3.6\cdot\frac{x}{L} \geq 0.195L + 14.9$$

for hatch ways located at the freeboard deck:

Where two or more panels are connected by hinges, each individual panel is to be considered separately.

3. Hatch cover strength criteria

3.1 Allowable stress checks

The normal and shear stresses σ and τ in the hatch cover structures are not to exceed the allowable values, σ_a and τ_a, in N/mm^2, given by:

σ_a = 0.8 σ_F

τ_a = 0.46σ_F

σ_F = being the minimum upper yield stress, in N/mm^2, of the material.

The normal stress in compression of the attached flange of primary supporting members is not to exceed 0.8 times the critical buckling stress of the structure according to the buckling check as given in 3.6

The stresses in hatch covers that are designed as a grillage of longitudinal and transverse primary supporting members are to be determined by a grillage or a FE analysis.

When a beam or a grillage analysis is used, the secondary stiffeners are not to be included in the attached flange area of the primary members.

When calculating the stresses σ and τ, the net scantlings are to be used.

3.2 Effective cross-sectional area of panel flanges for primary supporting members

The effective flange area Af, in cm^2, of the attached plating, to be considered for the yielding and buckling checks of primary supporting members, when calculated by means of a beam or grillage model, is obtained as the sum of the effective flange areas of each side of the girder web as appropriate:

$$A_f = \sum_{nf}(10b_{ef}t)$$

where:

nf = 2 if attached plate flange extends on both sides of girder web

= 1 if attached plate flange extends on one side of girder web only

t = Net thickness of considered attached plate, in mm

b_{ef} = Effective breadth, in m, of attached plate flange on each side of girder web

= b_p, but not to be taken greater than 0.165 *l*

b_p = Half distance, in m, between the considered primary supporting member and the adjacent one

l = Span, in m, of primary supporting members

3.3 Local net plate thickness

The local net plate thickness t, in mm, of the hatch cover top plating is not to be less than:

$$t = F_p \cdot 15.8 \cdot s\sqrt{\frac{p}{0.95\sigma_F}}$$

but to be not less than 1% of the spacing of the stiffener or 6 mm if that be greater. where:

Fp = Factor for combined membrane and bending response

= 1.50 in general

= 1.90 σ/σa, for σ/σa ≥ 0.8, for the attached plate flange of primary supporting members

s = Stiffener M_{fs} spacing, in m

p = Pressure, in kN/m^2 , as defined in 2.

σ = As defined in 3.5

σ_a = As defined in 3.1

3.4 Net scantlings of secondary stiffeners

The required minimum section modulus, Z, in cm^3, of secondary stiffeners of the hatch cover top plate, based on stiffener net member thickness, are given by:

$$Z = \sqrt{\frac{1000 \cdot l^2 \cdot s \cdot p}{12 \cdot \sigma_a}}$$

l = Secondary stiffener span, in m, to be taken as the spacing, in m, of primary supporting members or the distance between a primary supporting member and the edge support, as applicable. When brackets are fitted at both ends of all secondary stiffener spans, the secondary stiffener span may be reduced by an amount equal to 2/3 of the minimum brackets arm length, but not greater than 10% of the gross span, for each bracket.

s = Secondary stiffener spacing, in m

p = Pressure, in kN/m^2 , as defined in 2

σ_a = As defined in 3.1

The net section modulus of the secondary stiffeners is to be determined based on an attached plate width assumed equal to the stiffener spacing.

3.5 Net scantlings of primary supporting members

The section modulus and web thickness of primary supporting members, based on member net thickness, are to be such that the normal stress o in both flanges and the shear stress τ, in the web, do not exceed the allowable values σa and τa, respectively, defined in 3.1.

The breadth of the primary supporting member flange is to be not less than 40% of their depth for laterally

unsupported spans greater than 3.0 m. Tripping brackets attached to the flange may be considered as a lateral support for primary supporting members.

The flange outstand is not to exceed 15 times the flange thickness.

3.6 Critical buckling stress check

3.6.1 Hatch cover plating

The compressive stress σ in the hatch cover plate panels, induced by the bending of primary supporting members parallel to the direction of secondary stiffeners, is not to exceed 0.8 times the critical buckling stress σ_{C1}, to be evaluated as defined below:

$$\sigma_{C1} = \sigma_{E1} \qquad \text{when} \quad \sigma_{E1} \le \frac{\sigma_F}{2}$$

$$= \sigma_F\left[1 - \sigma_F/(4\sigma_{E1})\right] \text{when} \quad \sigma_{E1} > \frac{\sigma_F}{2}$$

where:

σ_F = Minimum upper yield stress, in N/mm^2, of the material

$$\sigma_{E1} = 3.6E\left(\frac{t}{1000s}\right)^2$$

E = Modulus of elasticity, in N/mm^2

= $2.06 \cdot 10^5$ for steel,

t = Net thickness, in mm, of plate panel,

s = Spacing, in m, of secondary stiffeners.

The mean compressive stress σ in each of the hatch cover plate panels, induced by the bending of primary supporting members perpendicular to the direction of secondary stiffeners, is not to exceed 0.8 times the critical buckling stress σ_{C2}, to be evaluated as defined below:

$$\sigma_{C2} = \sigma_{E2} \qquad \text{when} \quad \sigma_{E2} \le \frac{\sigma_F}{2}$$

$$= \sigma_F\left[1 - \sigma_F/(4\sigma_{E2})\right] \text{when} \quad \sigma_{E2} > \frac{\sigma_F}{2}$$

where:

$$\sigma_{E2} = 0.9mE\left(\frac{t}{1000s_s}\right)^2$$

$$m = c\left[1 + \left(\frac{S_s}{l_s}\right)^2\right]^2 \frac{2.1}{\Psi + 1.1}$$

s_s = Length, in m, of the shorter side of the plate panel

l_s = Length, in m, of the longer side of the plate panel

Ψ = Ratio between smallest and largest compressive stress

C = 1.3 when plating is stiffened by primary supporting members.

c = 1.21 when plating is stiffened by secondary stiffeners of angle or T type

c = 1.1 when plating is stiffened by secondary stiffeners of bulb type

c = 1.05 when plating is stiffened by flat bar

The biaxial compressive stress in the hatch cover panels, when calculated by means of FEM shell element model, is to be in accordance with each classification society's rule as deemed equivalent to the above criteria.

3.6.2 Hatch cover secondary stiffeners

The compressive stress σ in the top flange of secondary stiffeners, induced by the bending of primary supporting members parallel to the direction of secondary stiffeners, is not to exceed 0.8 times the critical buckling stress σ_{CS}, to be evaluated as defined below:

$$\sigma_{CS} = \sigma_{ES} \qquad \text{when} \quad \sigma_{ES} \le \frac{\sigma_F}{2}$$

$$= \sigma_F\left[1 - \sigma_F/(4\sigma_{ES})\right] \text{when} \quad \sigma_{ES} > \frac{\sigma_F}{2}$$

where:

σ_F = Minimum upper yield stress, in N/mm^2, of the material,

σ_{ES} = İdeal elastic buckling stress, in N/mm^2, of the secondary stiffener,

= Minimum between σ_{E3} and σ_{E4}

$$\sigma_{E3} = \frac{0.001E \cdot I_a}{Al^2}$$

I_a = Moment of inertia, in cm^4, of the secondary stiffener, including a top flange equal to the spacing of secondary stiffeners.

A = Cross-sectional area, in cm^2, of the secondary stiffener, including a top flange equal to the spacing of secondary stiffeners.

l = Span, in m, of the secondary stiffener.

$$\sigma_{E4} = \frac{\pi^2 E \cdot I_w}{10^4 I_p l^2}\left(m^2 + \frac{K}{m^2}\right) + 0.385 \cdot E\frac{I_t}{I_p}$$

$$K = \frac{C l^4}{\pi^4 E I_w} 10^6$$

m = Number of half waves, given by the following table:

	0<K<4	4<K<36	36<K<144	$(m-1)^2m^2<K\le m^2(m+1)^2$
m	1	2	3	m

I_w = Sectorial moment of inertia, in cm^6, of the secondary stiffener about its connection with the plating

$$= \frac{h_w^3 t_w^3}{36} 10^{-6}$$ for flat bar secondary stiffeners

$$= \frac{t_f b_f^3 h_w^2}{12} 10^{-6}$$ for “Tee” secondary stiffeners

$$= \frac{b_f^3 h_w^2}{12(b_f + h_w)^2}\left[t_f\left(b_f^2 + 2b_f h_w + 4h_w^2\right) + 3t_w b_f h_w\right] 10^{-6}$$

for angles and bulb secondary stiffeners

I_p = polar moment of inertia, in cm^4, of the secondary stiffener about its connection with the plating

$$= \frac{h_w^3 \cdot t_w}{3} 10^{-4}$$ for flat bar secondary stiffeners.

$$= \left(\frac{h_w^3 \cdot t_w}{3} + h_w^2 b_f t_f\right) 10^{-4}$$ for flanged secondary stiffeners.

I_t = St Venant's moment of inertia, in cm4, of the secondary stiffener without top flange

$$= \frac{h_w \cdot t_w^3}{3} 10^{-4}$$ for flat bat secondary stiffeners

$$= \frac{1}{3}\left[h_w \cdot t_w^3 + b_f t_f^3\left(1 - 0.63\frac{t_f}{b_f}\right)\right] 10^{-4}$$ for flanged secondary stiffeners

h_w, t_w = Height and net thickness, in mm, of the secondary stiffener, respectively,

b_f, t_f = Width and net thickness, in mm, of the secondary stiffener bottom flange, respectively,

s = Spacing, in m, of secondary stiffeners,

C = Spring stiffness exerted by the hatch cover top plating.

$$= \frac{k_p E t_p^3}{3s\left(1 + \frac{1.33 k_p h_w \cdot t_p^3}{1000 s t_w^3}\right)} 10^{-3}$$

$k_p = 1 - \eta_p$ to be taken not less than zero;

$\eta_p = \frac{\sigma}{\sigma_{E1}}$ for flanged secondary stiffeners, k_p need not be taken less than 0.1

σ = As defined in 3.5

σ_{E1} = As defined in 3.6.1

t_p = Net thickness, in mm, of the hatch cover plate panel.

For flat bar secondary stiffeners and buckling stiffeners, the ratio h/t_W is to be not greater than $15.k^{0.5}$, where:

h, t_W = Height and net thickness of the stiffener, respectively

k = $235/\sigma_F$

σ_F = Minimum upper yield stress, in N/mm^2, of the material.

3.6.3 Web panels of hatch cover primary supporting members

This check is to be carried out for the web panels of primary supporting members, formed by web stiffeners or by the crossing with other primary supporting members, the face plate (or the bottom cover plate) or the attached top cover plate.

The shear stress τ in the hatch cover primary supporting members web panels is not to exceed 0.8 times the critical buckling stress τ_C , to be evaluated as defined below:

$$\tau_C = \tau_E \quad \text{when} \quad \tau_E \le \frac{\tau_F}{2}$$

$$= \tau_F\left[1 - \tau_F/(4\tau_E)\right] \text{when} \quad \tau_E > \frac{\tau_F}{2}$$

where:

$$\tau_F = \frac{\sigma_F}{\sqrt{3}}$$

$$\tau_E = 0.9 k_t E\left[\frac{t_{pr,n}}{1000d}\right]^2$$

$t_{pr,n}$ = Net thickness, in mm, of primary supporting member

k_t = $5.35 + 4.0 / (a / d)^2$

a = greater dimension, in m, of web panel of primary supporting member

d = smaller dimension, in m, of web panel of primary supporting member.

For primary supporting members parallel to the direction of secondary stiffeners, the actual dimensions of the panels are to be considered.

For primary supporting members perpendicular to the direction of secondary stiffeners or for hatch covers built without secondary stiffeners, a presumed square panel of dimension d is to be taken for the determination of the stress τ_C. In such a case, the average shear stress τ between the values calculated at the ends of this panel is to be considered.

3.7 Deflection limit and connections between hatch cover panels

Load bearing connections between the hatch cover panels are to be fitted with the purpose of restricting the relative vertical displacements.

The vertical deflection of primary supporting members is to be not more than 0.0056 l, where l is the greatest span of primary supporting members.

3.8 Corrosion addition and steel renewal of Hatch Covers

For all the structure (plating and secondary stiffeners) of single skin hatch covers, the corrosion addition ts is to be 2.0 mm.

For double skin hatch covers, the corrosion addition is to be:

- 2.0 mm for the top and bottom plating
- 1.5 mm for the internal structures.

For single skin hatch covers and for the plating of double skin hatch covers, steel renewal is required where the gauged thickness is less than tnet + 0.5 mm. Where the gauged thickness is within the range tnet + 0.5 mm and tnet + 1.0 mm, coating (applied in accordance with the coating manufacturer's requirements) or annual gauging may be adopted as an alternative to steel renewal. Coating is to be maintained in GOOD condition, as defined in Section 22.

For the internal structure of double skin hatch covers, thickness gauging is required when plating renewal is to be carried out or when this is deemed necessary, at the discretion of **TL** Surveyor, on the basis of the plating corrosion or deformation condition. In these cases, steel renewal for the internal structures is required where the gauged thickness is less than tnet.

4. Hatch Coamings and Local Details

4.1 Load model

The pressure pcoam, in kN/m^2, on the No. 1 forward transverse hatch coaming is given by:

p_{coam} = 220, when a forecastle is fitted in accordance with A.3.2.

= 290 in the other cases

The pressure p_{coam}, in kN/m^2, on the other coamings is given by:

p_{coam} = 220

4.2 Local net plate thickness

The local net plate thickness t, in mm, of the hatch coaming plating is given by:

$$t = 14.9s\sqrt{\frac{P_{coam}}{\sigma_{a,coam}} S_{coam}}$$

where:

s = Secondary stiffener spacing, in m,

p_{coam} = Pressure, in kN/m^2, as defined in 4.,

S_{coam} = Safety factor to be taken equal to 1.15,

$\sigma_{a,coam}$ = 0.95 σF

The local net plate thickness is to be not less than 9.5 mm.

4.3 Net scantlings of longitudinal and transverse secondary stiffeners

The required section modulus Z, in cm^3, of the longitudinal or transverse secondary stiffeners of the hatch coamings, based on net member thickness, is given by:

$$Z = \frac{1000S_{coam} l^2 s p_{coam}}{m c_p \sigma_{a,coam}}$$

m = 16 in general

= 12 for the end spans of stiffeners sniped at the coaming corners

S_{COAM} = Safety factor to be taken equal to 1.15

l = Span, in m, of secondary stiffeners

s = Spacing, in m, of secondary stiffeners

p_{coam} = Pressure in kN/m^2 as defined in 4.1

c_p = Ratio of the plastic section modulus to the elastic section modulus of the secondary stiffeners with an attached plate breadth, in mm, equal to 40 t, where t is the plate net thickness,

= 1.16 in the absence of more precise evaluation,

$\sigma_{a,coam}$ = 0.95 σF

4.4 Net scantlings of coaming stays

The required minimum section modulus, Z, in cm^3, and web thickness, t_w, in mm of coamings stays designed as beams with flange connected to the deck or sniped and fitted with a bracket (see Figures 1 and 2 in Fig. 27.17) at their connection with the deck, based on member net thickness,are given by:

$$Z = \frac{1000 H_c^2 s p_{coam}}{2\sigma_{a,coam}}$$

$$t_w = \frac{1000 H_c s p_{coam}}{h \tau_{a,coam}}$$

H_C = Stay height, in m

s = Stay spacing, in m

h = Stay depth, in mm, at the connection with the deck

p_{coam} = Pressure, in kN/m^2, as defined in 4.1

$\sigma_{a,coam}$ = 0.95 σF

$\tau_{a,coam}$ = 0.5 σF

For calculating the section modulus of coaming stays, their face plate area is to be taken into account only when it is welded with full penetration welds to the deck plating and adequate underdeck structure is fitted to support the stresses transmitted by it.

For other designs of coaming stays, such as, for examples, those shown in Figures 3 and 4 in Fig.27.17, the stress levels in 3.1 apply and are to be checked at the highest stressed locations.

4.5 Local details

The design of local details is to comply with **TL** requirement for the purpose of transferring the pressures on the hatch covers to the hatch coamings and, through them, to the deck structures below. Hatch coamings and supporting structures are to be adequately stiffened to accommodate the loading from hatch covers, in longitudinal, transverse and vertical directions.

Underdeck structures are to be checked against the load transmitted by the stays, adopting the same allowable stresses specified in 4.4.

Unless otherwise stated, weld connections and materials are to be dimensioned and selected in accordance with **TL** requirements.

Double continuous welding is to be adopted for the connections of stay webs with deck plating and the weld throat is to be not less than 0.44 t_W, where t_W is the gross thickness of the stay web.

Toes of stay webs are to be connected to the deck plating with deep penetration double bevel welds extending over a distance not less than 15% of the stay width.

4.6 Corrosion addition and steel renewal of Hatch coamings

For the structure of hatch coamings and coaming stays, the corrosion addition t_s is to be 1.5 mm.

Steel renewal is required where the gauged thickness is less than t_{net} + 0.5 mm. Where the gauged thickness is within the range t_{net} + 0.5 mm and t_{net} + 1.0 mm, coating (applied in accordance with the coating manufacturer's requirements) or annual gauging may be adopted as an alternative to steel renewal. Coating is to be maintained in GOOD condition, as defined in Section 22**.**

5. Closing Arrangements

5.1 Securing devices

The strength of securing devices is to comply with the following requirements:

Panel hatch covers are to be secured by appropriate devices (bolts, wedges or similar) suitably spaced alongside the coamings and between cover elements.

Arrangement and spacing are to be determined with due attention to the effectiveness for weather-tightness, depending upon the type and the size of the hatch cover, as well as on the stiffness of the cover edges between the securing devices.

The net sectional area of each securing device is not to be less than:

$$A = \frac{1.4 \cdot a}{f} \quad \left(cm^2\right)$$

where:

a = Spacing in m of securing devices, not being taken less than 2 m

f = $(\sigma_Y / 235)e$

σ_Y = Specified minimum upper yield stress in N/mm^2 of the steel used for fabrication, not to be taken greater than 70% of the ultimate tensile strength.

e = 0.75 for $\sigma_Y > 235$

= 1.0 for $\sigma_Y \leq 235$

Rods or bolts are to have a net diameter not less than 19 mm for hatchways exceeding 5 m^2 in area.

Between cover and coaming and at cross-joints, a packing line pressure sufficient to obtain weathertightness is to be maintained by the securing devices.

For packing line pressures exceeding 5 N/mm, the cross section area is to be increased in direct proportion. The packing line pressure is to be specified.

The cover edge stiffness is to be sufficient to maintain adequate sealing pressure between securing devices. The moment of inertia, I, of edge elements is not to be less than:

I = $6 \cdot p \cdot a^4$ (cm^4)

p = Packing line pressure in N/mm, minimum 5 N/mm.

a = Spacing in m of securing devices.

Securing devices are to be of reliable construction and securely attached to the hatchway coamings, decks or covers. Individual securing devices on each cover are to have approximately the same stiffness characteristics.

Where rod cleats are fitted, resilient washers or cushions are to be incorporated.

Where hydraulic cleating is adopted, a positive means is to be provided to ensure that it remains mechanically locked in the closed position in the event of failure of the hydraulic system.

5.2 Stoppers

Hatch covers are to be effectively secured, by means of stoppers, against the transverse forces arising from a pressure of 175 kN/m^2.

With the exclusion of No.1 hatch cover, hatch covers are to be effectively secured, by means of stoppers, against the longitudinal forces acting on the forward end arising from a pressure of 175 kN/m^2.

No. 1 hatch cover is to be effectively secured, by means of stoppers, against the longitudinal forces acting on the forward end arising from a pressure of 230 kN/m^2.

This pressure may be reduced to 175 kN/m^2 when a forecastle is fitted in accordance with A, 3.2

The equivalent stress:

- In stoppers and their supporting structures, and
- Calculated in the throat of the stopper welds is not to exceed the allowable value of 0.8 σ_Y.

5.3 Materials and welding

Stoppers or securing devices are to be manufactured of materials, including welding electrodes, meeting relevant **TL** requirements.

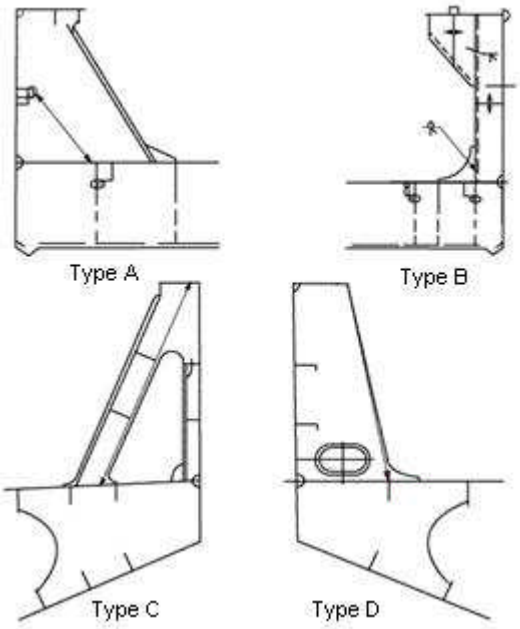

Fig. 27.17 Typical coaming stays

SECTION 28

OIL TANKERS

A. General

1. Classification

1.1 The classification notation **"OIL TANKER"** if engaged in the trade of carrying oil or **"PRODUCT TANKER"** if engaged in the trade of carrying oil other than crude oil is to be assigned to tankers built in accordance with the requirements of this section. The term "oil" refers to petroleum products having flash points at or below 60ºC , closed cup test and whose Reid vapour pressure is below that of atmospheric pressure. Unless specially mentioned in this Section, the requirements of Sections 1÷21 apply.

For double hull oil tankers and product carriers with **L**≥150 m. the IACS Common Structural Rules for Bulk Carriers and Oil Tankers, Part 1 and Part 2, Chapter 2 are applicable.

1.2 For the purpose of this Section "oil" means petroleum in any form including crude oil, refined products, sludge and oil refuse (see also product-list 1 at the end of this Section).

1.3 Products listed in the product-list 2 (at the end of this Section) are permitted to be carried in tankers complying with the regulations of this Section. Products whose Reid vapour pressure is above that of atmospheric pressure may only be carried where the cargo tank vents are fitted with pressure/vacuum relief valves and the tanks have been dimensioned for the set pressure of the pressure relief valves.

1.4 Oil tankers or product tankers are to be assigned the symbol **FS** related with damage stability according to MARPOL 73/78 Annex I.

1.5 For tankers intended to carry liquid cargoes with a flashpoint (closed cup test) above 60ºC only, the requirements of this Section concerning safety, need not be complied with.

1.6 Where cargo is intended to be heated Section 12, A.8. is also to be observed.

1.7 Oil or other flammable liquids are not permitted to be carried in fore- or afterpeak.

1.8 It is assumed that the provisions of Annex I and, as far as applicable, of Annex II of **MARPOL 73/78** are to be complied with.

Tankers not complying with the requirements of Annex I of **MARPOL** are not to be assigned the notation **"OIL TANKER"** or **"PRODUCT TANKER".**

2. Other Class Notations

2.1 "BULK CARRIER OR OIL TANKER" (or **"BULK CARRIER OR PRODUCT TANKER")** notation is to be assigned to single deck ships, having double skin construction with a double bottom, hopper side and topside tanks and intended for the carriage of oil or dry cargoes in bulk.

The regulations specified in G. are to be observed.

2.2 "ORE CARRIER OR OIL TANKER" (or **"ORE CARRIER OR PRODUCT TANKER")** notation is to be assigned to single deck ships, having two longitudinal bulkheads and a double bottom and double skin construction and intended for the carriage of oil or ore cargoes in bulk.

The regulations specified in G. are to be observed.

2.3 Where it is intended to carry liquids having a flashpoint (closed cup test) above 60ºC only, the following notation is to be given:

"Not suitable for cargo with flashpoints of 60ºC and less".

2.4 Where special structural measures (separation of piping, tank coating, etc.) permit simultaneous carriage of various oils and oil products, the following remark may be entered in the Certificate:

"Suitable for the carriage of various oil products".

2.5 Where the cargo tanks are not segregated from other spaces in fore and aft ship the following remark is to be entered in the Certificate:

"No cofferdams at the forward and/or aft ends".

B. Definitions

1. Terms

1.1 Accommodation spaces are those spaces used for public spaces, corridors, lavatories, cabins, offices, hospitals, cinemas, games and hobbies rooms, barber shops, pantries containing no cooking appliances and similar spaces. Public spaces are those portions of the accommodation spaces which are used for halls, dining rooms, lounges and similar permanently enclosed spaces.

1.2 Cargo area is that part of the ship that contains cargo tanks, slop tanks, cargo pump rooms including pump rooms, cofferdams, ballast or void spaces adjacent to cargo tanks or slop tanks and also deck areas throughout the entire length and breadth of the part of the ship over the above-mentioned spaces.

Where independent tanks are installed in hold spaces, cofferdams, ballast or void spaces at the after end of the aftermost hold space or at the forward end of the forwardmost hold space are excluded from the cargo area.

1.3 Cargo deck means an open deck within the cargo area,

1.3.1 Which forms the upper crown of a cargo tank or

1.3.2 Above which cargo tanks, tank hatches, tank cleaning hatches, tank gauging openings and inspection holes as well as pumps, valves and other appliances and fittings required for loading and discharging are fitted.

1.4 Cargo pump room is a space containing pumps and their accessories for the handling of products covered by this Section

1.5 Cargo service spaces are spaces within the cargo area used for workshops, lockers and store rooms of more than 2 m^2 in area used for cargo handling equipment.

1.6 Clean ballast means the ballast in a tank which since oil was last carried therein, has been so cleaned that the effluent there from if it were discharged from a ship which is stationary into clean calm water on a clear day would not produce visible traces of oil on the surface of the water or on adjoining shore lines or cause a sludge or emulsion to be deposited beneath the surface of the water or upon adjoining shore lines. If the ballast is discharged through an oil discharge monitoring and control system approved by **TL**, evidence based on such a system to the effect that the oil content of the effluent did not exceed 15 parts per million is to be determinative that the ballast was clean, notwithstanding the presence of visible traces.

1.7 Cofferdam is the isolating space between two adjacent steel bulkheads or decks. This space may be a void space or a ballast space.

The following spaces may also serve as cofferdams: oil fuel tanks as well as cargo pump rooms and pump rooms not having direct connection to the machinery space, passage ways and accommodation spaces. The clear spacing of cofferdam bulkheads is not to be less than 600 mm.

1.8 Control stations are those spaces in which ship's radio or main navigating equipment or the emergency source of power is located or where the fire-recording or fire-control equipment is centralized. This does not include special fire-control equipment which can be most practically located in the cargo area.

1.9 Crude oil is any oil occurring naturally in the earth whether or not treated to render it suitable for transportation and includes:

1.9.1 Crude oil from which certain distillate fractions have been removed, and

1.9.2 Crude oil to which certain distillate fractions may have been added.

1.10 Crude oil tanker means an oil tanker engaged in the trade of carrying crude oil.

1.11 Flashpoint is the temperature in degrees [ºC]

at which a product will give off enough flammable vapour to be ignited.

1.12 **Flame arrester** is a device through which an external flame front cannot propagate and ignite an internal gas mixture.

1.13 **Hazardous area** area in which an explosive gas atmosphere is or may be expected to be present, in quantities such as to require special precautions for the construction, installation and use of electrical apparatus.

1.14 **Hold space** is a space enclosed by the ship's structure in which an independent cargo tank is situated.

1.15 **Machinery spaces** are all machinery spaces of Category A and all other spaces containing propelling machinery, boilers, oil fuel units, steam and internal combustion engines, generators and major electrical machinery, oil filling stations, refrigerating, stabilizing, ventilation and air conditioning machinery, and similar spaces; and trunks to such spaces.

1.16 **Machinery spaces of Category A** are those spaces and trunks to such spaces which contain:

1.16.1 Internal combustion machinery used for main propulsion; or

1.16.2 Internal combustion machinery used for purposes other than main propulsion where such machinery has in the aggregate a total power output of not less than 375 kW; or

1.16.3 Any oil-fired boiler or oil fuel unit.

1.17 **Non-hazardous area** is an area not considered to be hazardous.

1.18 **Oil fuel unit** is the equipment used for the preparation of oil fuel for delivery to an oil-fired boiler, or equipment used for the preparation for delivery of heated oil to an internal combustion engine and includes any oil pressure pumps, filters and heaters dealing with oil at a pressure of more than 1.8 bar (gauge).

1.19 **Pump room** is a space, located in the cargo area, containing pumps and their accessories for the handling of ballast and oil fuel.

1.20 **Segregated ballast tanks** are tanks which are completely separated from the cargo oil and fuel oil systems and which are permanently allocated to the carriage of ballast or cargoes other than oil or noxious substance as defined in MARPOL 73/78.

1.21 **Service spaces** are those spaces used for galleys, pantries containing cooking appliances, lockers, mail and specie rooms, store-rooms, workshops other than those forming part of machinery spaces and similar spaces and trunks to such spaces.

1.22 **Slop tanks** are tanks particularly designated for the collection of tank draining, tank washing and other oily mixtures.

1.23 **Spaces not normally entered** are cofferdams, double bottoms, duct keels, pipe tunnels, stool tanks, spaces containing cargo tanks and other spaces where cargo may accumulate.

1.24 **Void space** is an enclosed space in the cargo area external to a cargo tank other than a hold space, ballast space, oil fuel tank, cargo pump room, pump room, or any space in normal use by personnel.

C. Ship Arrangement

1. Location and Separation of Spaces

1.1 Cargo tank area

1.1.1 Cargo tanks are to be segregated from accommodation, service and machinery spaces by means of cofferdams or any other similar compartments.

1.1.2 On oil and chemical tankers, fuel tanks located with a common boundary to cargo tanks shall not be situated within the cargo tank block. Such tanks may, however, be situated at the forward and aft ends of the cargo tank block instead of cofferdams. Fuel tanks shall extend neither fully nor partly into cargo or slop tanks.

They may however be accepted when located as independent tanks on open deck in the cargo area subject to spill and fire safety considerations. Fuel tanks are not permitted to extend into the protective area of cargo tanks required by MARPOL Annex I and the IBC code. For chemical tankers due attention has to be paid to restrictions on cargoes that can be located adjacent to fuel tanks.

The arrangement of independent fuel tanks and associated fuel piping systems, including the pumps, can be as for fuel tanks and associated fuel piping systems located in the machinery spaces. For electrical equipment, requirements to hazardous area classification must however be taken into account.

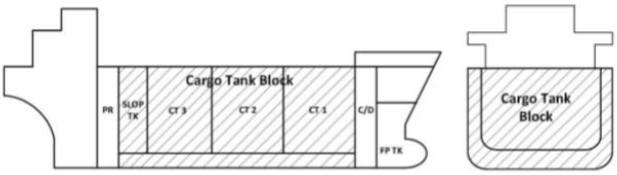

Cargo tank block is the part of the ship extending from the aft bulkhead of the aftmost cargo or slop tank to the forward bulkhead of the forward most cargo or slop tank, extending to the full depth and beam of the ship, but not including the area above the deck of the cargo or slop tank.

1.1.3 Double bottom tanks situated under cargo tanks are not to be used as fuel oil bunker tanks.

1.2 Pump rooms

Cargo pump rooms are to be separated from other spaces by gastight bulkheads.

1.3 Machinery spaces

Machinery spaces are to be positioned aft of cargo tanks and slop tanks; they are also to be situated aft of cargo pump-rooms and cofferdams, but not necessarily aft of the oil fuel tanks. Any machinery space is to be isolated from cargo tanks and slop tanks by cofferdams, cargo pump-rooms, oil fuel tanks or ballast tanks. Pump-rooms containing pumps and their accessories for ballasting those spaces situated adjacent to cargo tanks and slop tanks and pumps for oil fuel transfer are to be considered as equivalent to a cargo pump-room within the context of this regulation, provided that such pump-rooms have the same safety standard as that required for cargo pump-rooms. **(1)** However, the lower portion of the pump-room may be recessed into machinery spaces of category A to accommodate pumps, provided that the deck head of the recess is in general not more than one third of the moulded depth above the keel, except that in the case of ships of not more than 25 000 dwt, where it can be demonstrated that for reasons of access and satisfactory piping arrangements this is impracticable, a recess in excess of such height, but not exceeding one half of the moulded depth above the keel may be permitted.

1.4 Accommodation spaces, service spaces and control stations

1.4.1 Accommodation spaces, main cargo control stations and service spaces (excluding isolated cargo handling gear lockers) are to be positioned aft of all cargo tanks, slop tanks and spaces which isolate cargo or slop tanks from machinery spaces but not necessarily aft of the oil fuel bunker tanks and ballast tanks, but are to be arranged in such a way that a single failure of a deck or bulkhead will not permit the entry of gas or fumes from the cargo tanks or slop tanks into an accommodation space, main cargo control station, control station, or service space. A recess provided in accordance with 1.3 need not be taken into account when the position of these spaces is being determined.

1.4.2 However, where deemed necessary, accommodation spaces, main cargo control stations, control stations and service spaces may be permitted forward of the cargo tanks, slop tanks and spaces which isolate cargo and slop tanks from machinery spaces but not necessarily forward of oil fuel bunker tanks or ballast tanks. Machinery spaces, other than those of category A, may be permitted forward of the cargo tanks and slop tanks provided they are isolated from the cargo tanks and slop tanks by cofferdams, cargo pump-rooms, oil fuel bunker tanks or ballast tanks and subject to an equivalent standard of safety and appropriate availability of fire-extinguishing arrangements being provided.

(1) *See IACS Unified Interpretations SC 211.*

Accommodation spaces, main cargo control spaces, control stations and service spaces are to be arranged in such a way that a single failure of a deck or bulkhead will not permit the entry of gas or fumes from the cargo tanks or slop tanks into such spaces. In addition, where deemed necessary for the safety or navigation of the ship, machinery spaces of category A containing internal combustion machinerynot being main propulsion machinery having an output greater than 375 kW may be permitted to be located forward of the cargo area provided the arrangements are in accordance with the provisions of this paragraph.

Paint lockers, regardless of their use, cannot be located above the tanks and spaces defined in C.1.4.1 for oil tankers and the cargo area for chemical tankers.

1.4.3 Where the fitting of a navigation position above the cargo area is shown to be necessary, it is allowed for navigation purposes only and it is to be separated from the cargo tanks deck by means of an open space with a height of at least 2 m. The fire protection of such a navigation position is in addition to be as required for control spaces in Section 21, E.2.3. and other provisions, as applicable, of Section 21.

1.4.4 Means are to be provided to keep deck spills away from the accommodation and service areas. This may be accomplished by provision of a permanent continuous coaming of 100 mm. high surrounding cargo deck. In the aft corners of the cargo deck the coaming must be at least 300 mm high, extending from side to side. Special consideration is to be given to the arrangements associated with stern loading.

1.4.5 Where a corner-to-corner situation occurs between a non-hazardous space and a cargo tank, a cofferdam created by diagonal plate across the corner on the non-hazardous side, may be accepted as separation.

Such cofferdam if accessible is to be capable of being ventilated and if not accessible is to be filled with a suitable compound.

2. Tank Arrangement

2.1 Segregated ballast tanks

2.1.1 Every crude oil tanker of 20.000 dwt and above and every product tanker of 30.000 dwt and above are to be provided with segregated ballast tanks

2.1.2 The capacity of the segregated ballast tanks are to be so determined that the ship may operate safely on ballast voyages without recourse to the use of cargo tanks for water ballast except as provided for in items 2.1.3 and 2.1.4.

The capacity of the segregated ballast tanks are to be at least such that, in any ballast condition at any part of the voyage, including the conditions consisting of lightweight plus segregated ballast only, the ship's draughts and trim can meet the following requirements:

2.1.2.1 The moulded draught amidships (d_m) in metres (without taking into account any ship's deformation) are not to be less than:

$$d_m = 2.0 + 0.02\ L$$

Where L, is the length of the ship as defined in MARPOL 73/78.

2.1.2.2 The draughts at the forward and after perpendiculars are to correspond to those determined by the draught amidships (d_m), in association with the trim by the stern of not greater than 0.015 L, and

2.1.2.3 In any case, the draught at the after perpendicular are not to be less than which is necessary to obtain full immersion of the propeller(s).

2.1.3 In no case is ballast water to be carried in cargo tanks, except:

2.1.3.1 On those rare voyages when weather conditions are so severe that, in the opinion of the master, it is necessary to carry additional ballast water in cargo tanks for the safety of the ship; and

2.1.3.2 In exceptional cases where the particular character of the operation of an oil tanker renders it necessary to carry ballast water in excess of the quantity required under item 2.1.2 provided that such operation of the oil tanker falls under the category of exceptional cases as established by IMO.

2.1.4 In the case of crude oil tankers, the additional ballast permitted in 2.1.3 shall be carried in

cargo tanks only if such tanks have been crude oil washed before departure from an oil unloading port or terminal.

2.1.5 Notwithstanding the provisions of item 2.1.2 the segregated ballast conditions for oil tankers less than 150 metres in length shall be to the satisfaction of the Administration (*).

2.1.6 In every crude oil tanker of 20,000 dwt and above and every product carrier of 30,000 dwt and above delivered after 1 June 1982, as defined in Marpol Annex I regulation 1.28.4, except those defined in item 2.2, the segregated ballast tanks required to provide the capacity to comply with the requirements of item 2.1.2, which are located within the cargo tank length, shall be arranged in accordance with the requirements of items 2.1.6.1, 2.1.6.2 and 2.1.6.3 to provide a measure of protection against oil outflow in the event of grounding or collision.

2.1.6.1 Segregated ballast tanks and spaces other than oil tanks within the cargo tanks length (Lt) shall be so arranged as to comply with the following requirement:

$\Sigma PA_c + \Sigma PA_s \geq J\,[L_t\,(B + 2D)]$

PA_c = The side shell area in square metres for each segregated ballast tank or space other than an oil tank based on projected moulded dimensions,

PA_s = The bottom shell area in square metres for each such tank or space based on projected moulded dimensions,

L_t = Length in metres between the forward and after extremities of the cargo tanks,

D = Moulded depth in metres measured vertically from the top of the keel to the top of the freeboard deck beam at side amidships. In ships having rounded gunwales, the moulded depth shall be measured to the point of intersection of the moulded lines of the deck and side shell plating, the lines extending as though the gunwale were of angular design,

J = 0.45 for oil tankers of 20,000 tonnes deadweight, 0.30 for oil tankers of 200,000 tonnes deadweight and above, subject to the provisions of Item 2.1.6.2.

= For intermediate values of deadweight the value of J shall be determined by linear interpolation.

Whenever symbols given in this paragraph appear in this regulation, they have the meaning as defined in this paragraph.

2.1.6.2 For tankers of 200,000 tonnes deadweight and above the value of J may be reduced as follows:

$$J_{reduced} = \left[J - \left(a - \frac{O_C + O_S}{4O_A}\right)\right] \text{ or } 0.2$$

whichever is greater

where :

a = 0.25 for oil tankers of 200,000 tonnes deadweight,

= 0.40 for oil tankers of 300,000 tonnes deadweight,

= 0.50 for oil tankers of 420,000 tonnes deadweight and above

= For intermediate values of deadweight the value of a shall be determined by linear interpolation

O_C = The hypothetical outflow of oil in the case of side damage as defined in Marpol Annex I regulation 25.1.1

(*) *Marpol Annex I - Appendix 1 - Guidance to Administrations concerning draughts recommended for segregated ballast tankers below 150 m in length*

O_S = The hypothetical outflow of oil in the case of bottom damage as defined in Marpol Annex I regulation 25.1.2

O_A = The allowable oil outflow as required by Marpol Annex I regulation 26.2 of this Annex.

2.1.6.3 In the determination of PA_c and PA_s for segregated ballast tanks and spaces other than oil tanks the following shall apply:

2.1.6.3.1 The minimum width of each wing tank or space either of which extends for the full depth of the ship's side or from the deck to the top of the double bottom shall be not less than 2 metres. The width shall be measured inboard from the ship's side at right angles to the centreline. Where a lesser width is provided the wing tank or space shall not be taken into account when calculating the protecting area PA_c; and

2.1.6.3.1.2 the minimum vertical depth of each double bottom tank or space shall be B/15 or 2 metres, whichever is the lesser. Where a lesser depth is provided the bottom tank or space shall not be taken into account when calculating the protecting area PA_s.

For the purpose of determining the minimum vertical depth of each double bottom tank or space to be taken into account when calculating the protecting area PA_s, suction wells may be neglected, provided such wells are not excessive in area and extend below the cargo tank for a minimum distance and in no case more than half the height of the double bottom.

The minimum width and depth of wing tanks and double bottom tanks shall be measured clear of the bilge area and, in the case of minimum width, shall be measured clear of any rounded gunwale area.

2.2 Cargo tanks

2.2.1 Oil tankers of 600 dwt and above, but less than 5000 dwt

Every oil tanker of 600 dwt and above but less than 5000 dwt are to comply with 2.2.2 and 2.2.3 or are to:

2.2.1.1 At least be fitted with double bottom tanks or spaces having such a depth that the distance h specified in 2.2.2.1.2 complies with the following:

$$h = B / 15 \text{ [m]}$$

with a minimum value of h = 0.76 m.;

in the turn of the bilge area and at locations without a clearly defined turn of the bilge, the cargo tank boundary line are to run parallel to the line of the midship flat bottom as shown in Figure 28.1; and

2.2.1.2 Be provided with cargo tanks so arranged that the capacity of each cargo tank dose nor exceed 700 m^3 unless wing tanks or spaces are arranged in accordance with item 2.2.2.1, complying with the following:

$$w = 0.4 + \frac{2.4 \cdot DWT}{20\,000} \text{ [m]}$$

with a minimum value of w= 0.76 m.

2.2.2 Oil tankers of 5000 dwt and above

2.2.2.1 Every oil tanker of 5000 dwt and above, the entire cargo tank length is to be protected by ballast tanks or spaces other than tanks that carry oil as follows:

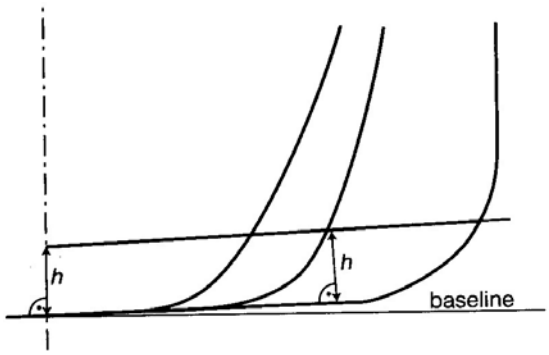

Figure 28.1 Cargo tank boundary lines for the purpose of item 2.2.1

2.2.2.1.1 Wing tanks or spaces

Wing tanks or spaces are to extend either for the full depth of the ship's side or from the top of the double bottom to the uppermost deck, disregarding a rounded gunwale where fitted. They are to be arranged such that the cargo tanks are located inboard of the moulded line of the side shell plating nowhere less than the distance w, which, as shown in Figure 28.2, is measured at any cross-section at right angles to the side shell, as specified below:

$$w = 0.5 + \frac{\cdot DWT}{20\,000} \text{ [m]}$$

or

w = 2.0 m.

whichever is the lesser.

The minimum value of w = 1.0 m.

2.2.2.1.2 Double bottom tanks or spaces

At any cross-section, the depth of each double bottom tank or space are to be such that the distance h between the bottom of the cargo tanks and the moulded line of the bottom shell plating measured at right angles to the bottom shell plating as shown in Figure 28.2 is not less than specified below:

h = B/15 [m] or

h = 2.0 m., whichever is the lesser.

The minimum value of h = 1,0 m.

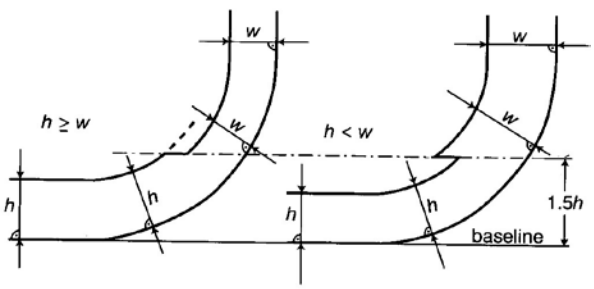

Figure 28.2 Cargo tank boundary lines for the purpose of item 2.2.2

Guidance:

Double bottom tanks or spaces as required above, may be dispensed with, provided that the design of the tanker is such that the cargo and vapour pressure exerted on the bottom shell plating forming a single boundary between the cargo and the sea does not exceed the external hydrostatic water pressure, as expressed by the following formula:

$$f \cdot h_c \cdot \rho_c \cdot g + p \leq d_n \cdot \rho_s \cdot g$$

where;

h_c = *Height of cargo in contact with the bottom shell plating [m]*

ρ_c = *Minimum cargo density [kg/m^3]*

d_n = *Minimum operating draught under any expected loading condition [m]*

ρ_s = *Density of sea water [kg/m^3]*

p = *Maximum set pressure above atmospheric pressure of pressure / vacuum valve provided for the cargo tank [pascal]*

f = *Safety factor = 1.1*

g = *Standard acceration of gravity [9.81 m/sn^2].*

Any horizontal partition necessary to fulfill the above requirements are to be located at a height not less than B/6 or 6 m. , whichever is the lesser, but not more than 0.6 D, above the baseline where D is the moulded depth amidships.

The location of wing tanks or spaces are to be as defined in item 2.2.1.1.1 except that, below a level 1.5 h above the baseline where h is defined in item 2.2.1.1.2, the cargo tank boundary line may be vertical down to the bottom plating, as shown in Figure 28.3.

2.2.1.1.2 - Guidance

2.2.2.1.3 Turn of the bilge area

For turn of the bilge area or at locations without a clearly defined turn of the bilge, when the distances h and w are different, the distance w is to have preference at

levels exceeding 1.5 h above the baseline as shown in Figure 28.2.

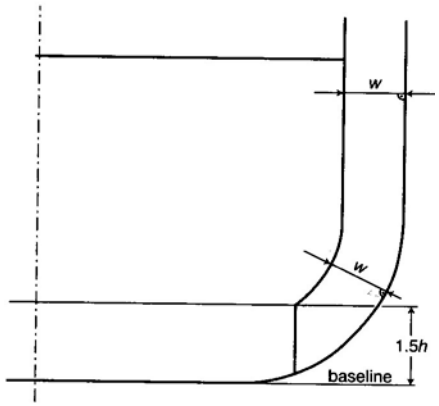

Figure 28.3 Cargo tank boundary lines for the purpose of item

Note: *The requirement above for turn of the bilge areas as shown in Figure 28.2 is applicable throughout the entire tank length.*

2.2.2.1.4 Suction wells in cargo tanks

Suction wells in cargo tanks may protrude into the double bottom below the boundary line defined by the distance h provided that such wells are as small as practicable and the distance between the well bottom and bottom shell plating is not less than 0.5 h.

2.2.2.1.5 Ballast and cargo piping

Ballast piping is permitted to be located within the pump-room double bottom provided any damage to that piping does not render the ship's pumps located in the "pump room" ineffective.

Ballast piping and other piping such as sounding and vent piping to ballast tanks are not to pass through cargo tanks. Cargo piping and similar piping to cargo tanks are not to pass through ballast tanks. Exemption to this requirement may be granted for short lengths of piping, provided that they are completely welded or equivalent.

2.2.2.1.6 The aggregate capacity of ballast tanks

On crude oil tankers of 20.000 dwt and above and product carriers of 30.000 dwt and above, the aggregate capacity of wing tanks, double bottom tanks, forepeak tanks and afterpeak tanks are not to be less than the capacity of segregated ballast tanks necessary to meet the requirements of item 2.1.2. Wing tanks or spaces and double bottom tanks used to meet the requirements of regulation 2.1.2 are to be located as uniformly as practicable along the cargo tank length. Additional segregated ballast capacity provided for reducing longitudinal hull girder bending stress, trim, etc. may be located anywhere within the ship. **(2)**

2.2.2.2 Double bottom in pump room

2.2.2.2.1 The cargo pump room is to be provided with a double bottom such that at any cross-section the depth of each double bottom tank or space are to be such that the distance h between the bottom of the pump room and the ship's baseline measured at right angles to the ship's baseline is not less than specified below:

h = B/15 [m] or

h = 2.0 m., whichever is the lesser.

The minimum value of h = 1 m.

The double bottom protecting the "pump-room" can be a void tank, a ballast tank or, unless prohibited by other regulations, a fuel oil tank.

Where a portion of the pump-room is located below the minimum height required in 2.2.2.2.1, then only that portion of the pump room is required to be a double bottom.

2.2.2.2.2 In case of pump rooms whose bottom plate is located above the base line by at least the minimum height required in 2.2.2.2.1 (e.g. gondola stern designs), there will be no need for a double bottom construction in way of the pump-room.

(2) *See also IACS Unified Interpretations MPC 6.*

2.2.2.2.3 Ballast pumps shall be provided with suitable arrangements to ensure efficient suction from double bottom tanks.

2.2.2.2.4 Notwithstanding the provisions of 2.2.2.2.1 and 2.2.2.2.2 where the flooding of the cargo pump room would not render the ballast or cargo pumping system inoperative, a double bottom need not be fitted.

2.3 Slop tanks

2.3.1 Oil tankers of 150 GT and above are to be provided with slop tank arrangements in accordance with item 2.3.2

2.3.2 The arrangements of the slop tank or combination of slop tanks are to have a capacity necessary to retain the slop generated by tank washing, oil residues and dirty ballast residues. The total capacity of the slop tank or tanks is not to be less than 3 % of the oil-carrying capacity of the ship, except the Administration may accept:

2.3.2.1 2 % for such oil tankers where the tank washing arrangements are such that once the slop tank or tanks are charged with washing water, this water is sufficient for tank washing and, where applicable, for providing the driving fluid for eductors, without the introduction of additional water into the system.

2.3.2.2 2 % where segregated ballast tanks or dedicated clean ballast tanks are provided in accordance with regulation 18 of Annex I of MARPOL 73/78, or where a cargo tank cleaning system using crude oil washing is fitted in accordance with regulation 33 of Annex I of MARPOL 73/78.

This capacity may be further reduced to 1.5 % for such oil tankers where the tank washing arrangements are such that once the slop tank or tanks are charged with washing water, this water is sufficient for tank washing and, where applicable, for providing the driving fluid for eductors, without the introduction of additional water into the system; and

2.3.2.3 1 % for combination carriers where oil cargo is only carried in tanks with smooth walls. This capacity may be further reduced to 0.8 % where the tank washing arrangements are such that once the slop tank or tanks are charged with washing water, this water is sufficient for tank washing and, where applicable, for providing the driving fluid for eductors, without the introduction of additional water into the system.

2.3.3 Slop tanks are to be so designed, particularly in respect of the position of inlets, outlets, baffles or weirs where fitted, so as to avoid excessive turbulence and entrainment of oil or emulsion with the water.

2.3.4 Oil tankers of 70.000 dwt and above are to be provided with at least two slop tanks.

3. Access and Openings to Tanks and Spaces

3.1 Access and openings to accommodation spaces, service spaces, control stations and machinery spaces

3.1.1 Except as permitted in item 3.2 access doors, air inlets and openings to accommodation spaces, service spaces, control stations and machinery spaces are not to face the cargo area. They are to be located on the transverse bulkhead not facing the cargo area or on the outboard side of the superstructure or deckhouse at a distance of at least 4% of the length of the ship but not less than 3 m. from the end of the superstructure or deckhouse facing the cargo area. This distance need not exceed 5 m.

3.1.2 Access doors may be permitted in boundary bulkheads facing the cargo area or within the limits specified in 3.1, to main cargo control stations and to such service spaces as provision rooms, store rooms and lockers, provided they do not give access directly or indirectly, to any other space containing or provided for accommodation, control stations or service spaces such as galleys, pantries or workshops, or similar spaces containing sources of vapour ignition. The boundaries of such space are to be insulated to "A-60" standard, with the exception of the boundary facing the cargo area.

Bolted plates for removal of machinery may be fitted within the limits specified in 3.1. Wheelhouse doors and wheelhouse windows may be located within the limits specified in 3.1 so long as they are designed to ensure that the wheelhouse can be made rapidly and efficiently gastight and vapourtight.

3.1.3 Windows and sidescuttles facing the cargo area

and on the sides of the superstructures and deckhouses within the limits specified in 3.1 are to be of the fixed (non-opening) type. Such windows and side scuttles, except wheelhouse windows, are to be constructed to "A-60" class standard and shall be of on approved type. **(3)**

3.2 Access to Spaces in the Cargo Area

3.2.1 Access to cofferdams, ballast tanks, cargo tanks and other spaces in the cargo area is to be direct from the open deck and such as to ensure their complete inspection. Access to double bottom spaces may be through a cargo pump room, pump room, deep cofferdam, pipe tunnel or similar compartments, subject to consideration of ventilation aspects.

3.2.2 For access through horizontal openings, hatches or manholes, the dimensions are to be sufficient to allow a person wearing a self-contained, air breathing apparatus and protective equipment to ascend or descend any ladder without obstruction and also to provide a clear opening to facilitate the hoisting of an injured person from the bottom of the space. The minimum clear opening is to be not less than 600 mm x 600 mm.

3.2.3 For access through vertical openings, or manholes providing passage through the length and breadth of the space, the minimum clear opening is to be not less than 600 mm. x 800 mm. at a height of not more than 600 mm. from the bottom shell plating unless gratings or other footholds are provided.

3.2.4 For oil tankers of less than 5.000 dwt, smaller dimensions may be approved by the Administration in special circumstances, if the ability to transverse such openings or to remove an injured person can be proved to the satisfaction of the Administration.

3.3 Access to pipe tunnels

3.3.1 Where pipe tunnels are arranged in double bottoms the following is to be observed:

3.3.1.1 Pipe tunnels are not to communicate with the engine room.

3.3.1.2 Provisions are to be made for at least two exits to the open deck arranged at a maximum distance from each other. One of these exits fitted with a watertight closure may lead to the cargo pump room.

3.3.2 Where there is permanent access from a pipe tunnel to the main pump room, a watertight door are to be fitted complying with the requirements of SOLAS II-2/25-9, and in addition with the following requirements:

3.3.2.1 In addition to the bridge operation**,** the watertight door is to be capable of being manually closed from outside the main pump room entrance.

3.3.2.2 The watertight door is to be kept closed during normal operations of the ship except when access to the pipe tunnel is required.

A notice is to be affixed to the door to the effect that it may not be left open.

3.3.3 Pipe Tunnel or Duct Keel Ventilation

3.3.3.1 General

A permanent mechanical ventilating system is to be provided for a pipe tunnel or duct keel. Where a permanent lighting system is installed in such a space, the ventilation system is to be capable of providing at least eight (8) changes of air per hour, based on the gross volume of the space. The system is to have mechanical exhaust, natural or mechanical supply, and ducting, as required to effectively purge this space and all connecting access trunks. Fan motors are to be located outside the space in question and outside the ventilation ducts. Fans are to be of non-sparking construction.

3.3.3.2 Gas Detection System

An approved gas detection system is to be provided to monitor the pipe tunnel.

3.4 Access to forecastle spaces

Access to forecastle spaces containing sources of ignition may be permitted through doors facing cargo area

(3) *See IACS Unified Interpretations FTP 4.*

provided the doors are located outside hazardous areas as defined in IEC Publication 60092-502.

3.5 Access to bow

Every tanker is to be provided with the means to enable the crew to gain safe access to the bow even in severe weather conditions. Such means of access is to be approved by **TL**. Also, see E.1.

4. Bow and Stern Loading and Unloading Arrangements

4.1 Subject to approval of **TL**, cargo piping may be fitted to permit bow and stern loading and unloading.

4.2 Outside the cargo area bow and stern loading and unloading lines are to be led outside the accommodation spaces, service and machinery spaces.

4.3 Cargo lines forward or aft of the cargo area, except at the loading stations are to have welded connections. Such piping are to be clearly identified and fitted with two valves or one valve and a spool piece or blanks at its connection to the cargo piping system within the cargo area.

The shore connection is to be fitted with a shut-off valve and a blank flange.

4.4 Entrances, air inlets and openings to accommodation, service and machinery spaces and control stations are to comply with SOLAS Reg. II-2/4.5.1.6 to 4.5.2.3.

4.5 Loading and unloading arrangements are not to interfere with safety equipment.

4.6 Continuous coamings are to be fitted to keep any spills away from accommodation and service areas.

5. Accidental Oil Outflow Performance

5.1 To provide adequate protection against oil pollution in the event of collision or stranding, the following are to be complied with:

5.1.1 For oil tankers of 5.000 dwt and above, the mean oil outflow parameter is to be as follows:

$O_M \leq 0.015$ for $C \leq 200.000\ m^3$

$O_M \leq 0.012 + (0{,}0003/200.000)\ (400.000 - C)$

for $200.000\ m^3 < C < 400.000\ m^3$

$O_M \leq 0.012$ for $C \geq 400.000\ m^3$

for combination carriers between 5.000 dwt and 200.000 m^3 capacity, the mean oil outflow parameter may be applied, provided calculations are submitted to the satisfaction of **TL**, demonstrating that, after accounting for its increased structural strength, the combination carrier has at least equivalent oil outflow performance to a standard double hull tanker of the same size having a $O_M \leq 0.015$.

$O_M \leq 0.021$ for $C \leq 100.000\ m^3$

$O_M \leq 0.015 + (0{,}0006/100.000)\ (200.000 - C)$

for $100.000\ m^3 < C < 200.000\ m^3$

where;

O_M = Mean oil outflow parameter

C = Total volume of cargo oil, in m^3, at 98% tank filling.

5.1.2 For oil tankers of less than 5.000 dwt:

The length of each cargo tank is not to exceed 10 m. or one of the following values, whichever is the greater:

5.1.2.1 Where no longitudinal bulkhead is provided inside the cargo tanks:

$(0.5\ b_i/B + 0{,}1)\ L$ but not to exceed 0.2L

5.1.2.2 Where a centerline longitudinal bulkhead is provided inside the cargo tanks:

$$(0.25\ b_i/B + 0.15)\ L$$

5.1.2.3 Where two or more longitudinal bulkheads are provided inside the cargo tanks:

- For wing cargo tanks: 0.2L

- For centre cargo tanks:
  if $b_i/B \geq 0.2$ L: 0.2

  if $b_i/B < 0.2$ L:
  where no centerline longitudinal
  bulkhead is provided:
  $(0.5\ b_i/B + 0.1)$ L

  where a centerline longitudinal
  bulkhead is provided:
  $(0.25\ b_i/B + 0.15)$ L

b_i is the minimum distance from the ship's side to the outer longitudinal bulkhead of the tank in question measured inboard at right angles to the centreline at the level corresponding to the assigned summer freeboard.

5.1.3 For general assumption to be applied when calculating the mean oil outflow parameter and calculation of mean outflow are defined in Annex I of MARPOL 73/78, Reg. 23 and IACS Unified Interpretations MPC 93.

D. Stability

1. Intact Stability (4)

1.1 Every oil tanker of 5.000 dwt and above are to comply with the intact stability criteria specified in items 1.1.1 and 1.1.2, for any operating draught under the worst possible conditions of cargo and ballast loading including intermediate stages of liquid transfer operations. Under all conditions the ballast tanks are to be assumed slack.

1.1.1 In port, the initial metacentric height GM_0, corrected for the free surface measured at 0° heel, are not to be less than 0.15 m.

1.1.2 At sea, the following criteria are to be applicable:

1.1.2.1 The area under the righting lever curve are not to be less than 0.055 m.rad up to $\theta=30^o$ angle of heel and not less than 0.09 m.rad up to $\theta=40^o$ or other angle of flooding θ_f (θ_f is the angle of heel at which openings in the hull superstructures or deckhouses which cannot be closed weathertight immerse. In applying this criterion, small openings through which progressive flooding cannot take place need not be considered as open) if this angle is less than 40° . Additionally, the area under the righting lever curve between the angles of heel of 30° and θ_f if this angle is less than 40° , are not to be less than 0.03 m.rad.

1.1.2.2 The righting lever GZ are to be at least 0.20 m. at an angle of heel equal to or greater than 30° .

1.1.2.3 The maximum righting arm are to occur at an angle of heel preferably exceeding 30° but not less than 25° ; and

1.1.2.4 The initial metacentric height GM_0, corrected for free surface measured at 0° heel, are not to be less than 0.15 m.

1.2 The requirements of item 1.1 are to be met through design measures. For combination carriers simple supplementary operational procedures may be allowed.

1.3 Simple supplementary operational procedures for liquid transfer operations referred to item 1.2 are to mean written procedures made available to the master which:

1.3.1 Are approved by **TL**;

1.3.2 Indicate those cargo and ballast tanks which may, under any specific condition of liquid transfer and possible range of cargo densities, be slack and still allow the stability criteria to be met. The slack tanks may vary during the liquid transfer operations and be of any combination provided they satisfy the criteria;

1.3.3 Will be readily understandable to the officer-in-charge of liquid transfer operations;

(4) *Refer to UI MPC11 Rev.2*

1.3.4 Provide for planned sequences of cargo/ballast transfer operations;

1.3.5 Allow comparisons of attained and required stability using stability performance criteria in graphical or tabular form;

1.3.6 Require no extensive mathematical calculations by the officer-in-charge;

1.3.7 Provide for corrective actions to be taken by the officer-in-charge in case of departure from recommended values and in case of emergency situations; and

1.3.8 Are prominently displayed in the approved trim and stability booklet and at the cargo/ballast transfer control station and in any computer software by which stability calculations are performed.

2. Subdivision and Damaged Stability

2.1 Every oil tanker of 150 GT and above is to comply with the subdivision and damage stability criteria as specified in item 2.3, after the assumed side or bottom damage as specified in item 2.2 for any operating draught reflecting actual partial or full load conditions consistent with trim and strength of the ship as well as relative densities of the cargo.

Such damage is to be applied to all conceivable locations along the length of the ship as follows. Ballast conditions where the tanker is not carrying oil in cargo tanks, excluding any oil residues, are not to be considered.

2.1.1 In tankers of more than 225 m. in length, anywhere in the ship's length;

2.1.2 In tankers of more than 150 m., but not exceeding 225 m. in length, anywhere in the ship's length except involving either after or forward bulkhead bounding the machinery space located aft. The machinery space are to be treated as a single floodable compartment; and

2.1.3 In tankers not exceeding 150 m. in length, anywhere in the ship's length between adjacent transverse bulkheads with the exception of the machinery space. For tankers of 100 m. or less in length where all requirements of item 2.3 cannot be fulfilled without materially impairing the operational qualities of the ship, **TL** may allow relaxations from these requirements.

2.2 The following provisions regarding the extent and the character of the assumed damage are to apply:

2.2.1 Side damage:

- Longitudinal extent	1/3 ($L^{2/3}$) or 14.5 m. whichever is less
- Transverse extent (inboard from the ship's side at right angles to the centreline at the level of the summer load line)	B/5 or 11.5 m. whichever is less
- Vertical extent	From the moulded line of the bottom shell plating at centre line, upwards without limit

2.2.2

- Bottom damage	For 0.3 L from the forward perpen-dicular of the ship	Any other part of the ship
- Longitudinal extent	1/3 ($L^{2/3}$) or 4.5 m. whichever is less	1/3 ($L^{2/3}$) or 14.5 m. whichever is less
- Transverse extent	B/6 or 10 m. whichever is less	B/6 or 5 m. whichever is less
- Vertical extent	B/15 or 6 m. whichever is less the moulded line of the bottom shell plating at centreline	B/15 or 6 m. whichever is less the moulded line of the bottom shell plating at centreline.

2.2.3 If any damage of a lesser extent than the maximum extent of damage specified in items 2.2.1 and 2.2.2 would result in a more severe condition, such damage are to be considered.

2.2.4 Where the damage involving transverse bulkheads is envisaged as specified in 2.1.1 and 2.1.2, transverse watertight bulkheads are to spaced at least at a distance equal to the longitudinal extent of assumed damage specified in item 2.2.1 in order to be considered effective. Where transfer bulkheads are spaced at a lesser distance, one or more these bulkheads within such extent of damage are to be assumed as non-existent for the purpose of determining flooded compartments.

2.2.5 Where the damage between adjacent transverse watertight bulkheads is envisaged as specified in item 2.1.3, no main transfer bulkhead or a transfer bulkhead bounding side tanks or double bottom tanks are to be assumed damaged, unless:

2.2.5.1 The spacing of the adjacent bulkheads is less than the longitudinal extent of assumed damage specified in item 2.2.1; or

2.2.5.2 There is a step or recess in a transverse bulkhead of more than 3.05 m. in length, located within the extent of penetration of assumed damage. The step formed by the after peak bulkhead and after peak top are not to be regarded as a step.

2.2.6 If pipes, ducts or tunnels are situated within the assumed extent of damage, arrangements are to be made so that progressive flooding cannot thereby extend to compartments other than those assumed to be floodable for each case of damage.

2.3 Oil tankers are to be regarded as complying with the damage stability criteria if the following requirements are met:

2.3.1 The final waterline, taking into account sinkage, heel and trim, are to be below the lower edge of any opening through which progressive flooding may take place. Such openings are to include air-pipes and those which are closed by means of weathertight doors or hatch covers and may include those openings closed by means of watertight manhole covers and flush scuttles, small watertight cargo tank hatch covers which maintain the high integrity of the deck, remotely operated watertight sliding doors, and sidescuttles of the non-opening type.

2.3.2 In the final stage of flooding**,** the angle of heel due to unsymmetrical flooding are not to exceed 25º, provided that this angle may be increased up to 30º if no deck edge immersion occurs.

2.3.3 The stability in the final stage of flooding is to be investigated and may be regarded as sufficient if the righting lever curve has at least a range of 20º beyond the position of equilibrium in association with a maximum residual righting lever of at least 0.1 m. within the 20º range; the area under the curve within this range is not to be less than 0.0175 m.rad. Unprotected openings are not to be immersed within this range unless the space concerned is assumed to be flooded. Within this range, the immersion of any of the openings listed in 2.3.1 and other openings capable of being closed weathertight may be permitted.

Note: *Other openings capable of being closed weathertight do not include ventilators (complying with ILLC 19(4)) that for operational reasons have to remain open to supply air to the engine room or emergency generator room (if the same is considered buoyant in the stability calculation or protecting openings leading below) for the effective operation of the ship.*

2.3.4 **TL** is to be satisfied that the stability is sufficient during intermediate stages of flooding.

2.3.5 Equalizing arrangements requiring mechanical aids such as valves or cross-levelling pipes, if fitted, are not to be considered for the purpose of reducing an angle of heel or attaining the minimum range of residual stability to meet the requirements of items 2.3.1, 2.3.2 and 2.3.3 and sufficient residual stability is to be maintained during all stages where equalization is used. Spaces which are linked by ducts of a large cross sectional area may be considered to be common.

2.4 The requirements of item 2.1 are to be confirmed by calculations which take into consideration the design characteristics of the ship, the arrangements, configuration and contents of the damaged compartments; and the distribution, relative densities

and the free surface effects of liquids. The calculations are to be based on the following:

2.4.1 Account is to be taken of any empty or partially filled tank, the relative density of cargoes carried, as well as any outflow of liquids from damaged compartments.

2.4.2 The permeabilities assumed for spaces flooded as a result of damage are to be as follows:

Spaces	**Permeabilities**
Appropriated to stores	0.60
Occupied by accommodation	0.95
Occupied by machinery	0.85
Voids	0.95
Intended for consumable liquids	0 to 0.95 **(5)**
Intended for other liquids	0 to 0.95 (5)

2.4.3 The buoyancy of any superstructure directly above the side damage is to be disregarded. The unflooded parts of superstructures beyond the extent of damage, however may be taken into consideration provided that they are separated from the damaged space by watertight bulkheads and the requirements of item 2.3.1 in respect of these intact spaces are complied with. Hinged watertight doors may be acceptable in watertight bulkheads in the superstructure.

2.4.4 The free surface effect is to be calculated at the angle of heel of 5º for each individual compartment. **TL** may require or allow the free surface correction to be calculated at an angle of heel greater than 5º for partially filled tanks.

2.4.5 In calculating the effect of the free surfaces of consumable liquids it is to be assumed that, for each type of liquid, at least one transverse pair or a single centreline tank has a free surface and the tank or combination of tanks to be taken into account are to be those where the effect of free surface is the greatest.

2.5 The master of every oil tanker to which this rule applies are to be supplied in an approved form with:

2.5.1 Information relative to loading and distribution of cargo necessary to ensure compliance with the provisions of this rule; and

2.5.2 Data on the ability of the ship to comply with damage stability criteria as determined by this rule, including the effect of relaxations that may have been allowed under item 2.1.3.

2.6 All oil tankers shall be fitted with a stability instrument, capable of verifying compliance with intact and damage stability requirements approved by the Administration having regard to the performance standards recommended by **TL (6)**:

2.6.1 Oil tankers constructed before 1 January 2016 shall comply with this requirement at the first scheduled renewal survey of the ship after 1 January 2016 but not later than 1 January 2021;

2.6.2 Notwithstanding the requirements of 2.6.1 a stability instrument fitted on an oil tanker constructed before 1 January 2016 need not be replaced provided it is capable of verifying compliance with intact and damage stability, to the satisfaction of the Administration; and

2.6.3 For the purposes of control under MARPOL Annex I Chapter 2 Regulation 11, the Administration shall issue a document of approval for the stability instrument.

---

(5) *The permeability of partially filled compartments are to be consistent with the amount of liquid carried in the compartment. Whenever damage penetrates a tank containing liquids, it is to be assumed that the contents are completely lost from that compartment and replaced by salt water up to the level of the final plane of equilibrium.*

(6) *Refer to part B, chapter 4, of the International Code on Intact Stability, 2008 (2008 IS Code), as amended; the Guidelines for the Approval of Stability Instruments (MSC.1/Circ.1229), annex, section 4, as amended; and the technical standards defined in part 1 of the Guidelines for verification of damage stability requirements for tankers (MSC.1/Circ.1461).*

2.7 The Administration may waive the requirements of 2.6 for the following oil tankers if loaded in accordance with the conditions approved by the Administration taking into account the guidelines developed by **TL (7)**:

2.7.1 Oil tankers which are on a dedicated service, with a limited number of permutations of loading such that all anticipated conditions have been approved in the stability information provided to the master in accordance with 2.5;

2.7.2 Oil tankers where stability verification is made remotely by a means approved by the Administration;

2.7.3 Oil tankers which are loaded within an approved range of loading conditions; or

2.7.4 Oil tankers constructed before 1 January 2016 provided with approved limiting KG/GM curves covering all applicable intact and damage stability requirements.

2.8 For oil tankers of 20.000 dwt and above, the damage assumptions prescribed in item 2.2.2 are to be supplemented by the following assumed bottom raking damage:

2.8.1 Longitudinal extent :

- Ships of 75.000 dwt and above:

  0.6L measured from the forward perpendicular

- Ships of less than 75.000 dwt:
  0.4 L measured from the forward perpendicular

2.8.2 Transverse extent: B/3 anywhere in the bottom.

2.8.3 Vertical extent: breach of the outer hull.

(7) *Refer to operational guidance provided in part 2 of the Guidelines for verification of damage stability requirements for tankers (MSC.1/Circ.1461).*

E. Hull Outfitting

1. Safe Access to Tanker Bows

1.1 Every oil tanker is to be provided with the means to enable the crew to gain safe access to the bow even in severe weather conditions. The access is to be by means of either a walkway on the deck or a permanently constructed gangway of substantial strength at or above the level of the superstructure deck or the first tier of deckhouse which should:

1.1.1 Be not less than 1 m. in width, situated on or as near as practicable to the centre line of the ship and located so as not to hinder easy access across working areas of the deck;

1.1.2 Be fitted at each side throughout its length with a footstep and guard rails supported by stanchions. Such rails should consist of no less than 3 courses, the lowest being not more than 230 mm. and the uppermost being at least 1 m above the gangway or walkway, and no intermediate opening should be more than 380 mm. in height. Stanchions should be at intervals of not more than 1.5 m;

1.1.3 Be constructed of fire resistant and non-slip material;

Fibre Reinforced Plastic (FRP) gratings used in lieu of steel gratings for safe access to tanker bows shall possess:

- Low flame spread characteristics and shall not generate excessive quantities of smoke and toxic products as per the International Code for Application of Fire Test Procedures, 2010 (2010 FTP Code); and

- Adequate structural fire integrity as per recognized standards **(*)**,

after undergoing tests in accordance with the recognized standards.

(*) For example, the Standard Specification for Fibre Reinforced Polymer (FRP) Gratings Used in Marine Construction and Shipbuilding (ASTM F3059-14)

1.1.4 Have openings, with ladders where appropriate, to and from the deck. Openings should not be more than 40 m. apart;

1.1.5 If the length of exposed deck to be traversed exceeds 70 m, have shelters of substantial construction set in way of the gangways or walkways at intervals not exceeding 45 m. Every such shelter should be capable of accommodating at least one person and be so constructed as to afford weather protection on the forward, port and starboard sides; and

1.1.6 If obstructed by pipes or other fittings of a permanent nature, be provided with means of passage over such obstructions.

1.2 Alternative or modified arrangements may be accepted for tankers with space constraint or tankers with large freeboard provided that such alternative or modified arrangements achieve an equivalent level of safety for access to the bow.

2. Emergency Towing Arrangements

2.1 Application

Emergency towing arrangements are to be fitted at both ends on board every oil tanker of not less than 20.000 dwt.

2.1 Requirements for the arrangements and components

2.1.1 General

The emergency towing arrangements are to be so designed as to facilitate salvage and emergency towing operations on tankers primarily to reduce the risk of pollution. The arrangements are to at all times be capable of rapid deployment in the absence of main power on the ship to be towed and of easy connection to the towing vessel. Figure 28.4 shows typical arrangements which may be used as reference.

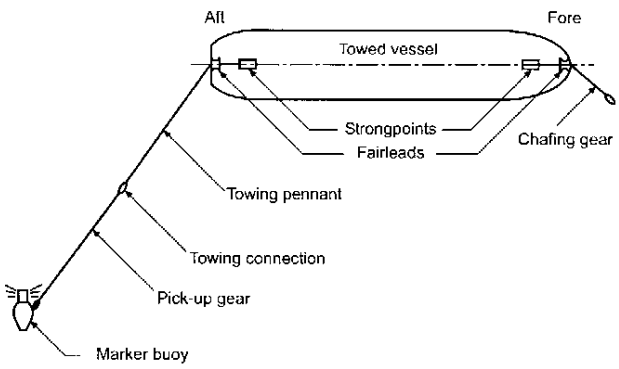

Figure 28.4 Typical emergency towing arrangement

2.1.2 Documents to be submitted

The following documents have to be submitted for approval:

- General layout of the bow and stern emergency towing arrangements,
- Drawings of the bow and stern strong points and fairleads including material specifications and strength calculations,
- Drawings of the local ship structures supporting the loads from the forces applied to the emergency towing equipment,
- Operation manual for the bow and stern emergency towing equipment.

2.1.3 Strength of the towing components

Towing components are to have a working strength of at least 1000 kN for tankers of 20.000 dwt and over but less than 50.000 dwt and at least 2000 kN for tankers of 50000 dwt and over. The working strength is defined as one half of the minimum breaking load of the towing pennant. The strength are to be sufficient for all relevant angles of towline, i.e. up to 90º from the ship's centerline to port and starboard and 30º vertical downwards.

2.1.4 Length of towing pennant

The towing pennant are to have a length of at least twice the lightest seagoing ballast freeboard at the fairlead plus 50 m.

2.1.5 Location of strongpoint and fairlead

The bow and stern strongpoints and fairleads are to be located so as to facilitate towing from either side of the bow or stern and minimize the stress on the towing system.

2.1.6 Strongpoint

The inboard end fastening are to be a chain cable stopper or towing bracket or other fitting of equivalent strength. The strongpoint can be designed integral with the fairlead.

2.1.7 Fairleads

2.1.7.1 Size

Fairleads should have an opening large enough to pass the largest portion of the chafing gear, towing pennant or towing line.

2.1.7.2 Geometry

The fairlead should give adequate support for the towing pennant during towing operation which means bending 90º to port and to starboard side and 30º vertical downwards. The bending ratio (towing pennant bearing surface diameter to towing pennant diameter) should be not less than 7 to 1.

2.1.7.3 Vertical location

The fairlead should be located as close as possible to the deck and, in any case, in such a position that the chafing chain is approximately parallel to the deck when it is under strain between the strongpoint and the fairlead.

2.1.8 Chafing chain

2.1.8.1 Type

The chafing chain should be stud link chain.

2.1.8.2 Length

The chafing chain are to be long enough to ensure that the towing pennant remains outside the fairlead during the towing operation. A chain extending from the strongpoint to a point at least 3 m. beyond the fairlead are to meet this criterion.

2.1.8.3 Connecting limits

One end of the chafing chain are to be suitable for connection to the strongpoint. The other end are to be fitted with a standard bow shackle.

2.1.8.4 Stowage

The chafing chain is to be stowed in such a way that it can be rapidly connected to the strongpoint.

2.1.9 Towing connection

The towing pennant are to have a hard eye-formed termination allowing connection to a standard bow shackle.

2.1.10 Prototype test

Designs of emergency towing arrangements should be prototype tested to the satisfaction of **TL**. **(8)**

2.2 Ready availability of towing arrangements

2.2.1 To facilitate approval of such equipment and to ensure rapid deployment, emergency towing arrangements are to comply with the following criteria:

2.2.1.1 The aft emergency towing arrangement are to be pre-rigged and be capable of being deployed in a controlled manner in harbor conditions in not more than 15 minutes.

2.2.1.2 The pick-up gear for the aft towing pennant are to be designed at least for manual operation by one person taking into account the absence of power and the potential for adverse environmental conditions that may prevail during such emergency towing operations.

---

(8) *See also IACS Unified Interpretations SC 113.*

The pick-up gear are to be protected against the weather and other adverse conditions that may prevail.

2.2.1.3 The forward emergency towing arrangement are to be capable of being deployed in harbor conditions in not more than one hour.

2.2.1.4 The forward emergency towing arrangement is to be designed at least with a means of securing a towline to the chafing gear using a suitably positioned pedestal roller to facilitate connection of the towing pennant.

2.2.1.5 The forward emergency towing arrangement which comply with the requirements for aft emergency towing arrangements may be accepted.

2.2.1.6 All emergency towing arrangements are to be clearly marked to facilitate safe and effective use even in darkness and poor visibility.

2.2.2 All emergency towing arrangements are to be inspected by ship personnel at regular intervals and maintained in good working order.

3. Tankers Equipped for Single Point Offshore Mooring

3.1 Tankers equipped for single point offshore mooring and bow loading arrangements should in addition to the provision of C.4 comply with the following:

3.1.1 Where a forward bridge control position is arranged on the fore deck, provisions are to be made for emergency escape from the bridge control position in the event of fire.

3.1.2 An emergency quick release system is to be provided for cargo hose and mooring chain. Such systems are not to be installed within the fore ship.

3.1.3 The mooring system is to be provided with a tension meter continuously indicating the tension in the mooring system during the bow loading operation. This requirement may be waived if the tanker has in operation equivalent equipment, e.g. a dynamic positioning system ensuring that the permissible tension in the mooring system is not exceeded.

3.1.4 An operation manual describing emergency procedures such as activation of the emergency quick release system and precautions in case of high tension in the mooring system, should be provided on board.

4. Cathodic Protection and Aluminium Coatings in Oil Cargo Tanks

4.1 Cathodic Protection

4.1.1 Impressed current systems are not permitted in oil cargo tanks.

4.1.2 Magnesium or magnesium alloy anodes are not permitted in oil cargo tanks and tanks adjacent to cargo tanks.

4.1.3 Aluminium anodes are only permitted in cargo tanks and tanks adjacent to cargo tanks in locations where the potential energy does not exceed 275 Nm. The height of the anode is to be measured from the bottom of the tank to the center of the anode, and its weight is to be taken as the weight of the anode as fitted, including the fitting devices and inserts. However, where aluminium anodes are located on horizontal surfaces such as bulkhead girders and stringers not less than 1 meter wide and fitted with an upstanding flange or face flat projecting not less than 75 mm. above the horizontal surface, the height of the anode may be measured from this surface.

Aluminium anodes are not to be located under tank hatches or Butterworth openings (in order to avoid any metal parts falling on the fitted anodes) unless protected by the adjacent structure.

4.1.4 There is no restriction on the positioning of zinc anodes.

4.1.5 The anodes should have steel cores and these should be sufficiently rigid to avoid resonance in the anode support and be designed so that they retain the anode even when it is wasted.

4.1.6 The steel inserts are to be attached to the structure by means of a continuous weld of adequate section. Alternatively, they may be attached to separate supports by bolting, provided a minimum of two bolts with lock-nuts are used. However, approved mechanical means of clamping will be accepted.

4.1.7 The supports at each end of an anode should not be attached to separate items which are likely to move independently.

4.1.8 When anode inserts or supports are welded to the structure, they should be arranged so that the welds are clear of stress raisers.

4.2 Aluminium Coatings

The use of aluminium coatings containing greater than 10 percent aluminium by weight in the dry film isprohibited in cargo tanks, cargo tank deck area, pump rooms, cofferdams or any other area where cargo vapour may accumulate.

Note: *The statement written in red above is to be applied from 1 January 2014 to new tankers and new applications of coating and piping on existing tankers.*

Aluminised pipes may be permitted in ballast tanks, in inerted cargo tanks and, provided the pipes are protected from accidental impact, in hazardous areas on open deck.

F. Strength of Girders and Transverses in the Cargo Tank Area

1. General

1.1 Girders and transverses may be pre-designed according to Section 12, B.4. Subsequently a stress analysis according to 2. is to be carried out. All structural elements exposed to compressive stresses are to be subjected to a buckling analysis according to Section 3, C.

1.2 Brackets fitted in the corners of transverses and tripping brackets fitted on longitudinals are to have smooth transitions at their toes.

1.3 Well rounded drain holes for oil and air holes are to be provided, they are not to be larger than required for facilitating efficient drainage and for venting of vapours. No such holes and no welding scallops shall be placed near the constraint points of stiffeners and girders and near the toes of brackets.

1.4 Transverses are to be effectively supported to resist loads acting vertically on their webs.

2. Stress Analysis

A three-dimensional stress analysis is to be carried out for the primary structural members in way of the cargo tank area by applying the FE calculation method. The analysis is to be based on the loading conditions according to Fig. 28.5 and 28.6 for double hull oil tankers with one or two longitudinal oil-tight bulkheads.

Tankers with deviating cargo tank arrangements and loading conditions will be separately considered. Consideration of additional load cases may be required if deemed necessary by **TL**.

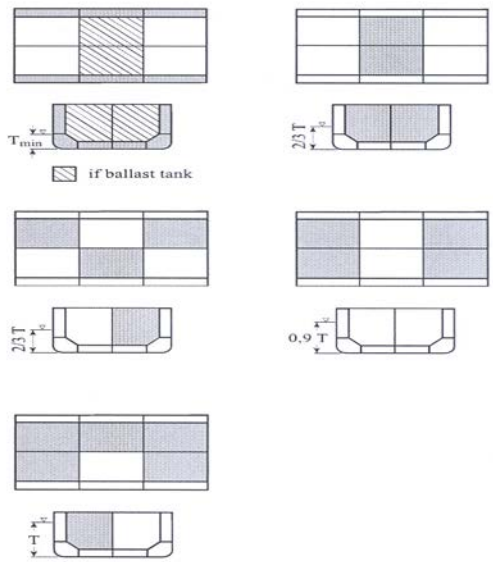

Figure 28.5 Loading conditions for tankers with one centreline longitudinal bulkhead

2.1 Structural modelling

The longitudinal extent of the FE model is determined by the geometry of the structure as well as the local load distribution according to inner and outer pressures and the global load distribution according to the section forces obtained from the longitudinal strength calculation.

Regarding assessment of fatigue strength, **TL** reserve the right to require examination of structural details by means of local FE models

2.2 Loads

Local static and dynamic loads are to be determined according to Section 5, global static and dynamic loads according to Section 6. Also the heeling condition determined by the angle φ is to be considered.

The internal pressure in the cargo tanks is to be determined in accordance with the formula for p_1 as per Section 5, C.

2.3 Permissible Stresses

2.3.1 Transverse members

Under load assumption according to 2. the following stress values are not to be exceeded in the transverses and in the bulkhead girders:

bending and axial stresses:

$$\sigma_x = 150/k \text{ [N/mm}^2\text{]}$$

shear stress:

$$\tau = 100/k \text{ [N/mm}^2\text{]}$$

equivalent stress:

$$\sigma_v = \sqrt{\sigma_x^2 + 3\tau^2} = 180/k \quad \text{[N/mm}^2\text{]}$$

σ_x = Stress in longitudinal direction of the girder.

k = Material factor according to Section 3, A.2.

The stress values as per Section 12, B.4.2 are not to be exceeded when the load p_2 as per Section 5, C.3. is applied.

2.3.2 Longitudinal members

In the longitudinal girders at deck and bottom, the combined stress resulting from local bending of the girder and longitudinal hull girder bending of the ship's hull under sea load is not to exceed 230/k [N/mm^2].

2.4 Fatigue strength

A fatigue strength analysis according to Section 3, D. is to be carried out.

Analogously it shall be based on Table 3.25 of Section 3 whereas loading due to different draught, i.e. ship in ballast and ship fully laden respectively may be considered according to service life, see Section 3, D.5.2.

2.5 Cross ties

The cross sectional area of the cross ties due to compressive loads is not to be less than:

$$A_k = \frac{P}{9.5 - 4.5 \cdot 10^{-4} \cdot \lambda^2}, \ [\text{cm}^2] \quad , \text{ for } \lambda \le 100$$

$$A_k = \frac{P \cdot \lambda^2}{5 \cdot 10^4}, \ [\text{cm}^2] \quad , \text{ for } \lambda > 100$$

λ = ℓ/i = Degree of slenderness

ℓ = Unsupported span in [cm]

i = Radius of gyration = $\sqrt{I / A_k}$ [cm]

I = Smallest moment of inertia in [cm^4]

For the first approximation,

P = A · p [kN], where

A = Area supported by one cross tie in [m^2].

p = Load p_1 or p_d in [kN/m^2] as per Section 5, D.8.

Finally the sectional area A_k is to be checked for the load P resulting from the transverse strength calculation.

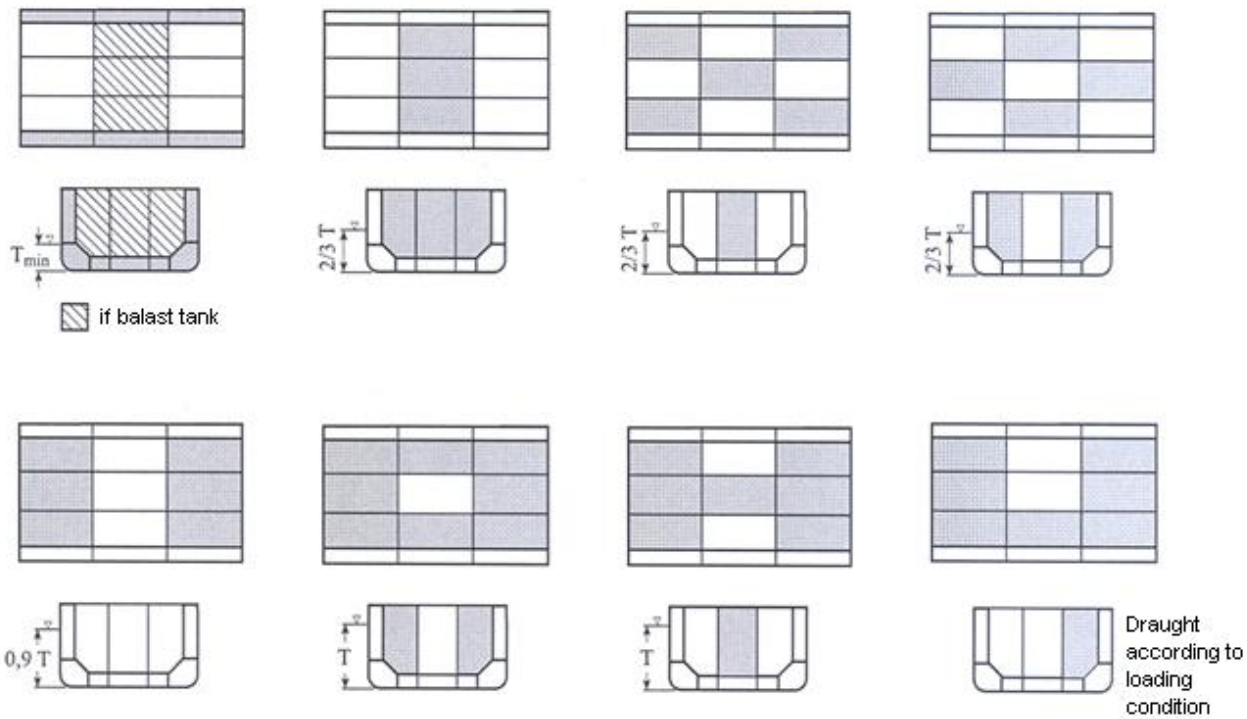

Figure 28.6 Loading conditions for tankers with two longitudinal bulkhead

G. Oiltight Longitudinal and Transverse Bulkheads

1. Scantlings

1.1 The scantlings of bulkheads are to be determined according to Section 12. The thicknesses are not to be less than the minimum thickness as per I. For stress and buckling analysis the requirements of F.1.1 apply.

1.2 The top and bottom strakes of the longitudinal bulkheads are to have a width of not less than 0.1 **H**, and their thickness is not to be less than:

1.2.1 Top strake of plating:

t_{min} = 0.75 x deck thickness

1.2.2 Bottom strake of plating:

t_{min} = 0.75 x bottom thickness.

1.3 The section modulus of horizontal stiffeners of longitudinal bulkheads is to be determined as for longitudinals according to Section 8, C.2, however, it is not to be less than W_2 according to Section 12, B.4.

1.4 The stiffeners are to be continuous in way of the girders. They are to be attached to the webs of the girders in such a way that the support force can be transmitted observing τ_{perm}= 100/k [N/mm^2].

2. Cofferdam Bulkheads

Cofferdam bulkheads forming boundaries of cargo tanks are to have the same strength as cargo tank bulkheads. Where they form boundaries of ballast tanks or tanks for consumables the requirements of Section 12 are to be complied with. Where they form boundaries of pump-room or machinery spaces the scantling for watertight bulkheads as required by Section 11 are sufficient.

H. Wash Bulkheads

1. General

1.1 The total area of perforation in wash bulkheads is to be approximately 5 -10 per cent of the bulkhead area.

1.2 The scantlings of the top and bottom strakes of plating of a perforated centerline bulkhead are to be as required by G.1.2. Large openings are to be avoided in way of these strakes.

The centerline bulkhead is to be constructed in such a way as to serve as shear connection between bottom and deck.

2. Scantlings

2.1 The plate thickness of the transverse wash bulkheads is to be determined in such a way as to support the forces induced by the side shell, the longitudinal bulkheads and the longitudinal girders. The shear stress is not to exceed 100/k [N/mm^2]. Beyond that, the buckling strength of plate panels is to be examined. The plate thickness is not to be less than the minimum thickness according to I.

2.2 The stiffeners and girders are to be determined as required for an oiltight bulkhead. The pressure p_d according to Section 5, D.8. is to be substituted for p.

I. Minimum Thickness

1. In cargo and ballast tanks within the cargo area the thickness of longitudinal strength members, primary girders, bulkheads and associated stiffeners is not to be less than the following minimum value:

$$t_{min} = 6.5 + 0.02\,\mathbf{L} \quad [mm]$$

Where **L** need not be taken greater than 250 m. For secondary structures such as local stiffeners t_{min} need not be taken greater than 9,0 mm.

2. For pump rooms, cofferdams and void spaces within the cargo area as well for fore peak tanks the requirements for ballast tanks according to Section 12, B.2. apply, however, with an upper limit of

$$t_{min} = 11.0 \text{ mm.}$$

For aft peak tank the requirements of Section 12, B.2.3. apply.

3. In way of cargo tanks the thickness of side shell is not to be taken less than

$$t_{min} = \sqrt{\mathbf{L} \cdot k} \quad [mm]$$

k = Material factor

4. If the berthing zone is stiffened longitudinally and the transverse web frame spacing exceeds circa 3.3 m. the side shell plating in way of the berthing zone is to be increased by 10 · **a** [%]. The berthing zone extends from 0.3 m. below the ballast waterline to 0.3 m. above the load waterline. In ship's longitudinal direction it is the area of the side shell which breadth is larger than 0.95 · **B**.

J. Ships for the Carriage of Dry Cargo or Oil in Bulk

1. General

1.1 Application

The requirements in this sub-Section apply to ships intended to carry in bulk liquid cargoes with a flashpoint not exceeding 60ºC or dry cargo. The requirements are supplementary to those for class notation "Oil Tanker" or "Product Tanker". For ships intended to also carry dry cargo in bulk the regulations of Section 27 apply also.

1.2 Class notation

"BULK CARRIER OR OIL TANKER" (or **"BULK CARRIER OR PRODUCT TANKER")** and **"ORE CARRIER OR OIL TANKER" (**or **"ORE CARRIER OR PRODUCT TANKER")**

notations are to be assigned to ships complying with the

requirements of this sub-section.

1.3 Basis for application

1.3.1 Dry cargo and liquid cargo with a flashpoint not exceeding 60ºC are not carried simultaneously, except for cargo oil-contaminated water (slop) in the slop tank(s).

1.3.2 Before the ship enters dry cargo service, all cargo piping, tanks and compartments in the cargo area are to be cleaned and ventilated to the extent that the content of hydrocarbon gases is brought well below the lower explosion limit. Further, the cleaning is to ensure that the concentration of hydrocarbon gases remains below the lower explosion limit during the forthcoming dry cargo voyage.

2. Design and Arrangement of Cargo area

2.1 Design of cargo tanks

Cargo tanks are to be designed to facilitate efficient cleaning.

The bottom, side and end boundaries of the tanks may be of the following designs:

- Plane surfaces,
- Corrugated bulkheads,
- Vertical stiffeners, but no internal primary structural members in the tanks.

In tanks where primary structural members are unavoidable, particular attention is to be paid to the arrangement of cleaning facilities.

2.2 Arrangement and access to spaces

2.2.1 Spaces in the cargo area such as pipe tunnels, stool tanks, cofferdams, etc. are to be arranged so as to avoid the accumulation of hydrocarbons.

2.2.2 Pipe tunnels and other compartments of comparable extent in the cargo area are to be provided with access openings at forward and aft end.

For tunnels and compartments exceeding 100 m. in length, an additional access opening is to be provided near the mid length. The access entrances are to be arranged from open deck or cargo pump room, and are to be suitable for use in cleaning and gas-freeing operations.

2.2.3 Stool tanks are to be provided with access from open deck. The access opening is to be suitable for use in cleaning and gas-freeing operations.

Access to stool tanks from pipe tunnel may be accepted provided the following requirements are complied with:

- Bolted manhole cover or equivalent gastight closing with oil resistant packings and signboards with instruction to normally keep it closed. The cover are to be lifted 300 mm. above bottom of stool tank to prevent back-flow of oil when opened.
- Ventilation pipes of sufficient size on port and starboard side for cross ventilation and gas-freeing by portable fans.

2.2.4 Access entrances and passages are to have a clear opening of at least 600 mm. x 600 mm.

2.2.5 Opening which may be used for cargo operations are not permitted in bulkheads and decks separating oil cargo spaces from other spaces not designed and equipped for the carriage of oil cargoes unless alternative approved means are provided to ensure equivalent integrity.

3. Slop Tanks

3.1 The slop tanks are to be surrounded by cofferdams except where the boundaries of the slop tanks where slop may be carried on dry cargo voyages are the hull, main cargo deck, cargo pump room bulkhead or oil fuel tank. These cofferdams are not to be open to a double bottom, pipe tunnel, pump room or other enclosed space. Means are to be provided for filling the cofferdams with water and for draining them. Where the boundary of a slop tank is the cargo pump room bulkhead the pump room is not to be open to the

double bottom, pipe tunnel or other enclosed space, however, openings provided with gastight bolted covers may be permitted.

3.2 Hatches and tank cleaning openings to slop tanks are only permitted on the open deck and are to be fitted with closing arrangements. Except where they consist of bolted plates with bolts at watertight spacing, these closing arrangements are to be provided with locking arrangements which must be under the control of the responsible ship's officer.

K. Product List 1

List of Oils (9)

Asphalt solutions
Blending stocks
Roofers flux
Straight run residue

Oils
Clarified
Crude oil
Mixtures containing crude oil
Diesel oil
Fuel oil no. 4
Fuel oil no. 5
Fuel oil no. 6
Residual fuel oil
Road oil
Transformer oil
Aromatic oil (excluding vegetable oil)
Lubricating oil and blending stocks
Mineral oil
Motor oil
Penetrating oil
Spindle oil
Turbine oil

Distillates
Straight run
Flashed feed stocks

Gas oil
Cracked

Gasoline blending stocks
Alkylates – fuel
Reformates
Polymer – fuel

Gasolines
Casing head (natural)
Automotive
Aviation
Straight run
Fuel oil no. 1 (kerosene)
Fuel oil no. 1-D
Fuel oil no. 2
Fuel oil no. 2-D

Jet fuels
JP-1 (kerosene)
JP-3
JP-4
JP-5 (kerosene, heavy)
Turbo fuel
Kerosene
Mineral spirit

Naphtha
Solvent
Petroleum
Heartcut distillate oil

.

(9) *This list of oils shall not necessarily be considered as comprehensive*

L. Product List 2

Symbols and notations used in Product list 2

Product name (column a) **:** Alphabetic name of the product as given in Chapter 18 of the IBC Code.

Pollution Category (column b) **:**
Z = Pollution category as defined in **MARPOL 73/78**, Annex II
O = Means that the product was evaluated and found to fall outside the pollution categories X,Y and Z defined in **MARPOL 73/78**, Annex II

Flashpoint (column d) **:** Values in ( ) are "open cup values", all other values are "closed cup values".
- = non-flammable product

Fire protection (column e) **:** The letters A,B,C and D refer to the following fire-extinguishing media determined to the effective for certain products:

A : Alcohol-resistant foam
B : Regular foam, encompasses all foams that are not of an alcohol-resistant type, including fluoro-protein and aqueous-film-forming foam (AFFF)
C : Water spray
D : Dry chemical.

Product name	Pollution Category	Density [t/m^3]	Flashpoint [°C]	Fire Protection
a	**b**	**C**	**d**	**e**
Acetone	Z	0.79	-18	A
Alcoholic beverages, not otherwise specified	Z	1.00	20-60 (1)	A
Apple juice	O	1.00	-	-
n-Butyl alcohol	Z	0.81	29	A
sec-Butyl alcohol	Z	0.81	24	A
Calcium nitrate solutions (% 50 or less)	Z	1.50	-	-
Clay slurry	O	1.50	-	-
Coal slurry	O	1.50	-	-
Diethylene glycol	Z	1.12	>60	A
Ethyl alcohol	Z	0.79	13	A
Ethylene carbonate	Z	1.32	>60	A
Glucose solution	O	1.50	-	-
Glycerine	Z	1.26	>60	A
Hexamethylenetetramine solutions	Z	1.50	-	-
Hexylene glycol	Z	0.92	>60	B,C
Hydrogenated starch hydrolysate	O	1.25	-	-
Isopropyl alcohol	Z	0.78	22	A
Kaolin slurry	O	1.50	-	-
Lecithin	O	1.75	-	-
Magnesium hydroxide slurry	Z	1.23	-	-
Maltitol solutin	O	1.025	-	-
Methyl propyl ketone	Z	0.82	<60	A
Molasses	O	1.45	>60	A
Non-noxious liquid (11),not otherwise specified, Cat. Z	Z	1.00	<60	A
Noxious liquid (12), not otherwise specified Cat. O	O	1.00	<60	A
Polyaluminium chloride solution	Z	1.25	-	-
Polyglycerin, sodium salt solution (containing less than 3% sodium hydroxide)	Z	1.27	>60	-
Potassium formate solutions	Z	1.025	-	-
Propylene carbonate	Z	1.025	-	-
Propylene glycol	Z	1.03	>60	A
Sodium acetate solutions	Z	1.45	-	-
Sodium sulphate solutions	Z	1.45	-	-
Sorbitol solution	O	1.50	>60	A
Solphonated polyacrylate solution	Z	1.025	-	-
Tetraethyl silicate monomer/oligomer (20% in ethanol)	Z	1.025	-	-
Triethylene glycol	Z	1.12	>60	A
Vegetable protein solution (hydrolysed)	O	1.20	-	-
Water	O	1.00	-	-

(1) *Composition dependent.*

SECTION 29

TUGS

A. General

1. Application

1.1 The requirements in this section apply to vessels specially intended for towing.

1.2 Ships dealt with in this Section are to comply with the requirements of Section 1÷21 and additionally with the requirements of this section.

2. Class Notation

2.1 Vessels built in accordance with the requirements of this Section are to be assigned the class notation **"TUG".**

- In addition to this section, tugs complying with the requirements of Part C Chapter 13 are assigned the notation **"ESCORT TUG".**

- Tugs complying with the requirements in Table 29.3, to be assigned the notation **"SALVAGE TUG"**

2.2 Where towing services are to be combined with other duties such as offshore supply or ice breaking, corresponding additional class notations may be assigned if the relevant requirements are met.

3. Documentation

3.1 In addition to the documents listed in Section 1÷21, the following documents are to be submitted for approval :

- Structural drawings of winch and/or towing hook or chain stopper

- Structural drawings of attachments to the hull structure

- Bollard pull test programme.

3.2 The following documents are to be submitted for information:

- Arrangement of towing equipment

- Calculation of the towing design force and required bollard pull.

- Strength calculation of the winch and/or hook.

3.3 The bollard pull of the vessel is to be obtained by a special test approved by **TL**.
The bollard pull test procedure is to be as given in D,6.2.2.

3.4 **TL** material certificates will generally be required for:

- Towing hook with attachment,

- Tow rope(s) (*),

- Winch drum and flanges,

- Couplings,

- Winch frame (*),

- Shafts for drums,

- Brake components,

- Gear shaft and wheels (*).

For items marked with (*), work's certificate from approved manufacturer will normally be accepted.

4. Materials

Materials for towing hook, towing winch and towline are to be in accordance with **TL** Material Rules.

B. Hull Strength

1. General

For determining the scantlings of strength members, the draught T is not to be taken less than 0.85 H.

2. Fore Peak Structures

2.1 Side stringers are to be arranged in fore peak forward of the collision bulkhead not more than 2 m. apart.

The stringers are to be effectively connected to the collision bulkhead. Depending on the type of service expected, additional strengthening may be required.

2.2 The frames are to be connected to the stringers by brackets at every frame.

3. Stern Frame

The cross sectional area of a solid stern frame is to be 20% greater than required according to Section 10, B.2.1. For fabricated stern frames, the thickness of the propeller post plating is to be increased by 20% compared to the requirements of Section 10, B.2.2. The section modules W_Z of the sole piece is to be increased by 20 % compared to the modules determined according to Section 12, B.4.

4. Side Structure

The side structure of areas frequently subjected to impact loads is to be reinforced by increasing the section modules of side frames by 20%.

5. Machinery Casing

5.1 Scantlings of plating and stiffeners of exposed machinery casings are to be increased at least 20 % compared to the requirements for main class.

5.2 Exposed machinery casings are to be at least 900 mm in height, measured from the surface of the deck and provided with weathertight means of closure.

5.3 In general, longitudinal sides of machinery casings are to be supported by girders situated under the deck to which the deck beams are to be connected.

6. Foundations of Towing Arrangement

6.1 **T**he substructure intended to connect the towing arrangement to the hull structure are to be suitably reinforced to withstand the test force F_T given in Table 29.1.

6.2 The stresses in the foundations and fastening elements are not to exceed the permissible stresses shown in Table 29.2, assuming a load equal to the test load of the towing book in case of hook arrangements, and a load of the winch holding capacity in case of towing winches, see also D.3.5 and D.5.3.

C. Hull Arrangement

1. Fenders

Suitable fenders for the protection of the vessel's sides are to be arranged at deck level, extending on the whole length of the vessel. Alternatively, an arrangement with loose fenders may be accepted provided the upper part of the vessel is adequately stiffened.

2. Emergency Exits From Machinery Space

Emergency exit are to be arranged from engine room to weather deck. The emergency exit is to be capable of being used at extreme angles of inclination. The escape hatch coaming height on the weather deck is to be not less than 600 mm above the deck surface.
Escape hatch covers are to have hinges fitted such that the predominant direction of green seas will cause the cover to close and are to be capable of being opened and closed watertight from either side.

3. Companionways

Companionways leading to spaces below weather deck are to have sill height not less than 600 mm and are to have watertight steel doors which can be opened and closed watertight from either side.

Note: *For vessels of less than 24 m, sill height of companionways leading to spaces below weather deck may be reduced to 450 mm.*

4. Side Scuttles

Side scuttles are not allowed in the vessel's sides unless the distance from the lower edge of the side scuttles to the design waterline is at least 750 mm. Side scuttles in the vessel's sides and in side of superstructures are to be provided with internally fitted, hinged deadlights and are to satisfy the requirements to type A according to ISO 1751.

5. Rudder

The rudder stock diameter is to be increased by 5 % compared with the requirements for main class.

6. Bulwarks

The bulwarks are to be sloped inward to avoid distortions likely to occur during contact. The height may be reduced according to operational needs.

D. Towing Arrangement

1. General Design Requirements

1.1 The towing arrangement is to be located as near as possible to the mid length of the vessel. The arrangement is to be such that the heeling moment arising when the towline is running in the athwartships direction, is to be as small as possible.

1.2 With direct-pull (hook-towrope), the towing hook and its radial gear are to be designed such as to permit adjusting to any foreseeable towrope direction, see 3.5.

1.3 The attachment point of the towrope shall be arranged closely behind the centre of buoyancy.

1.4 On tugs equipped with a towing winch, the arrangement of the equipment is to be such that the towrope is led to the winch drum in a controlled manner under all foreseeable conditions (directions of the towrope). Means shall be provided to spool the towrope effectively on the drum, depending on the winch size and towing gear configuration.

1.5 Towrope protection sleeves or other adequate means shall be provided to prevent the directly pulled towrope from being damaged by chafing/abrasion.

2. Definition of Loads

2.1 The design force $\mathbf{F_D}$ corresponds to the towrope pull (or the bollard pull, if the towrope pull is not defined) stipulated by the owner. The design force may be verified by a bollard pull test, see D,6.2.2

2.2 The test force $\mathbf{F_T}$ is used for dimensioning as well as for testing the towing hook and connected elements. The test force is related to the design force as shown in Table 29.1.

Table 29.1 Design force F_D and test force F_T

Design force F_D [kN]	Test force F_T [kN]
$F_D < 400$	$2 \cdot F_D$
$400 \leq F_D \leq 1200$	$F_D + 400$
$F_D > 1200$	$1.33 \cdot F_D$

2.3 The minimum breaking force of the towrope is based on the design force, see 4.3.

2.4 The winch holding capacity is to be based on the minimum breaking force, see 5.3, the rated winch force is the hauling capacity of the winch drive when winding up the towrope, see 6.1.3.3.

2.5 For forces at the towing hook foundation see 3.5.4.

3. Towing Hook and Slip Device

3.1 The towing hook is to be fitted with an adequate device guaranteeing slipping (i.e., quick release) of the towrope in case of an emergency. Slipping is to be possible from the bridge as well as from at least one other place in the vicinity of the hook itself, from where in both cases the hook can be easily seen.

3.2 The towing hook has to be equipment with a mechanical, hydraulic or pneumatic slip device. The slip device is to be designed such as to guarantee that unintentional slipping is avoided.

3.3 A mechanical slip device is to be designed such that the required release force under test force $\mathbf{F_T}$ does not exceed neither 150 N at the towing hook nor 250 N when activating the device on the bridge. In case of a mechanical slip device, the releasing rope is to be guided adequately over sheaves. If necessary, slipping should be possible by downward pulling, using the whole body weight.

3.4 Where a pneumatic or hydraulic slip device is used, a mechanical slip device has to be provided additionally.

3.5 Dimensioning of towing hook and towing gear

3.5.1 The dimensioning of the towing gear is based on the test force F_T.

3.5.2 The towing hook, the towing hook foundation, the corresponding substructures and the slip device are to be designed for the following directions of the towrope:

- For a test force F_T up to 400 kN:
  - In the horizontal plane, directions from abeam over astern to abeam
  - In the vertical plane, from horizontal to 60 degr. upwards
- For a test force F_T of more than 400 kN:
  - In the horizontal plane, as above
  - In the vertical plane, from horizontal to 45 degr. Upwards

3.5.3 Assuming the test force F_T acting in any of the directions described in 3.5.2, the permissible stresses in the towing equipment elements defined above is not to exceed the values shown in Table 29.2.

3.5.4 For the towing hook foundation it has to be additionally proven that the permissible stresses given in Table 29.2 are not exceeded assuming a load equal to the minimum breaking force F_{min} of the towrope.

4. Towropes

4.1 Towrope materials shall correspond to **TL** Rules for Materials. All wire ropes should have as far as possible the same lay.

The suitability of fibre ropes as towropes is to be separately demonstrated to **TL**.

4.2 The length of the towrope shall be chosen according to the tow formation (masses of tug and towed object), the water depth and the nautical conditions. Regulations of flag state authorities have to be observed.

4.3 The required minimum breaking force F_{min} of the towrope is to be calculated on the basis of the design force $\mathbf{F_D}$ and a utility factor K, as follows:

$F_{min} = K \cdot F_D$

where;

K = 2,5 for $\mathbf{F_D} \leq 200$ kN and

K = 2,0 for $\mathbf{F_D} \geq 1000$ kN

Table 29.2 Permissible stresses

Type of stress	Permissible stress
Axial and bending tension and axial and bending compression with box type girders and tubes	$\sigma = 0.83 \cdot R_{eH}$
Axial and bending compression with girders of open cross sections or with girders consisting of several members	$\sigma = 0.72 \cdot R_{eH}$
Shear	$\tau = 0.48 \cdot R_{eH}$
Equivalent stress	$\sigma_{eq} = 0.85 \cdot R_{eH}$
R_{eH}= Yield strength or 0.2% - proof stress	

For F_D between 200 and 1000 kN, K may be interpolated linearly.

4.4 For ocean towages, at least one spare towrope with attachment shall be available on board.

4.5 The required minimum breaking force F_{min} of the tricing rope is to be calculated on the basis of the holding capacity of the tricing winch and an utility factor K = 2.5.

5. Towing Winches

5.1 Arrangement and control

5.1.1 The towing winch, including towrope guiding equipment, has to be arranged such as to guarantee safe guiding of the towrope in all directions according to 3.5.2.

5.1.2 The winch must be capable of being safety operated from all control stands. Apart from the control stand on the bridge, at least additional control stand has to be provided on deck. From each control stand the winch drum is to be freely visible; where this is not ensured, the winch is to be provided with a self-rendering device.

5.1.3 Each control stand has to be equipped with suitable operating and control elements. The arrangement and the working direction of the operating elements have to be analogous to the direction of motion of the towrope.

5.1.4 Operating levers are to, when released, return into the stop position automatically. They shall be capable of being secured in the stop position.

5.1.5 It is recommended that, on vessels for ocean towage, the winch is fitted with equipment for measuring the pulling force in the towrope.

5.1.6 If, during normal operating conditions, the power for the towing winch is supplied by a main engine shaft generator, another generator is to be available to provide power for the towing winch in case of main engine or shaft generator failure.

5.2 Winch drum

5.2.1 The towrope is to be fastened on the winch drum by a breaking link.

5.2.2 The winch drum is to be capable of being declutched from the drive.

5.2.3 The diameter of the winch drum is to be not less than 14 times the towrope diameter.

5.2.4 The length of the winch drum is to be such that at least 50 m. of the towrope can be wound up in the first layer.

5.2.5 To ensure security of the rope and fastening, at least 3 dead turns must remain on the drum.

5.2.6 At the ends, drums must have disc sheaves whose outer edges must surmount the top layer of the rope at least by 2,5 rope diameters, if no other means is provided to prevent the rope from slipping off the drum.

5.2.7 If a multi-drum winch is used, then each winch drum is to be capable of independent operation.

5.2.8 Each towing winch drum is to have sufficient capacity to stow the length of the provided towrope.

5.2.3 to 5.2.5 are not applicable to towropes of austenitic steels and fibre ropes. In case these towrope materials are utilized, dimensioning of the wind drum is subject to **TL** approval.

5.3 Holding capacity/dimensioning

5.3.1 The holding capacity of the towing winch (towrope in the first layer) is to correspond to 80% of the minimum breaking load F_{min} of the towrope.

5.3.2 When dimensioning the towing winch components, which - with the brake engaged- are exposed to the pull of the towage (rope drum, drum shaft brakes, foundation frame and its fastening to the deck), a design tractive force equal to the holding capacity is to be assumed. When calculating the drum shaft the dynamic stopping forces of the brakes have to be considered. The drum brake shall not give way under this load.

5.4 Brakes

5.4.1 If the drum brakes are power-operated, manual operation of the brake is to be provided additionally.

5.4.2 Drum brakes are to be capable of being quickly released from the control stand on the bridge, as well as from any other control stand. The quick release is to be possible under all working conditions, including failure of the power drive.

5.4.3 The operating levers for the brakes are to be secured against unintentional operation.

5.4.4 Following operation of the quick release device, normal operation of the brakes must be restore immediately.

5.4.5 Following operation of the quick release device, the winch driving motor must not start again automatically.

5.4.6 Towing winch brakes are to be capable of preventing the towrope from paying out when the vessel is towing at the design force F_D and are not to be released automatically in case of power failure.

5.5 Tricing winches

5.5.1 Control stands for the tricing winches have to be located at safe distance off the sweep area of the towing gear. Apart from the control stands on deck, at least one other control stand is to be available on the bridge.

5.5.2 Tricing winches have to be suitably dimensioned depending on F_{min} of the tricing rope. For operation of the tricing winch, perfect transmission of orders has to be safeguarded. For tricing ropes, see 4.5

6. Testing

6.1 Workshop testing

6.1.1 Towing hook and slip device

6.1.1.1 Towing hooks with a mechanical slip device, the movable towing arm and other load transmitting elements have to be subjected to a test force F_T with the aid of an approved testing facility. In connection with this test, the slip device is to be tested likewise; the release force has to be measured and shall not exceed 150 N, see 3.3.

6.1.1.2 When towing hooks are provided with a pneumatic slip device, both the pneumatic and the mechanical slip device required by 3.4 have to be tested according to 6.1.1.1.

6.1.1.3 Also towing hooks with a hydraulic slip device have to be tested according to 6.1.1.1, but the slip device itself need not be subjected to the test load.

If a cylinder tested and approved by **TL** is employed as a loaded gear component, during the load test the cylinder may be replaced by a load transmitting member not pertaining to the gear, the operability of the gear being restored subsequently. The operability of the slip device has to be proved with the towrope loosely resting on the hook.

6.1.2 Certification and stamping of towing hook

Following each satisfactory testing at manufacturer's, a Certificate is to be issued by the attending surveyor and is to be handed on board, together with the towing hook.

6.1.3 Towing winches

6.1.3.1 The winch power unit has to be subjected to a test bed trial at the manufacturer's. A works test certificate has to be presented on the occasion of the final inspection of the winch, see 6.2.4.

6.1.3.2 Components exposed to pressure are to be pressure-tested to a test pressure $\mathbf{P_T}$ of

$\mathbf{P_T} = 1{,}5 \cdot p$

where;

p = Admissible working pressure [b]

= Opening pressure of the safety valves

However, with working pressure exceeding 200 [b], the test pressure need not be higher than p+100 [b].

Tightness tests are to be carried out at the relevant components.

6.1.3.3 Upon completion, towing winches have to be subjected to a final inspection and an operational test to the rated load. The hauling speed has to be determined during an endurance test under the rated tractive force.

During these trials, in particular the braking and safety equipment is to be tested and adjusted. The brake has to be tested to a test load equal to the rated holding capacity, but at least equal to the bollard pull.

If manufacturers do not have at their disposal the equipment required, a test confirming the design winch capacity, and including adjustment of the overload protection device, may be carried out after installation on board, see 6.2.3. In that case only the operational trials without applying the prescribed loads are to be carried out at the manufacturers.

6.1.4 Accessory towing gear components, towrope

6.1.4.1 Accessories subjected to towing loads, where not already covered by 6.1.1.1, shall generally be tested to test force $\mathbf{F_T}$ at the manufacturer.

6.1.4.2 For all accessories and for the towrope, test certificates have to be submitted.

6.1.4.3 **TL** reserve the right of stipulating an endurance test to be performed at towing gear components, where considered necessary for assessment of their operability.

6.2 Initial testing of towing gear on board and bollard pull test

6.2.1 The installed towing gear has to be tested on the tug using the bollard pull test to simulate the towrope pull.

6.2.2 Bollard pull test procedure

The following test procedure is to be adhered to:

- A proposed test programme are to be submitted prior to the testing
- During testing of continuous bollard pull, the main engine(s) are to be run at the manufactıurer's recommended maximum continuous rating.
- During testing of overload pull, the main engines are to be run at the manufacturer's recommended maximum continuous rating that can be maintained for a minimum of 1 hour. The overload test may be omitted.
- The propeller(s) fitted when performing the test are to be the propeller(s) used when the vessel is in normal operation.
- All auxiliary equipment such as pumps, generators, etc. which are driven from the main engine(s) or propeller shaft(s) in normal operation of the vessel are to be connected during the test.
- The length of the towline is not to be less than 300 m. measured between the stern of the vessel and the shore.
- The water depth at the test location is not to be less than 20 m. within a radius of 100 m. of the vessel.
- The test is to be carried out with the vessel's displacement corresponding to full ballast and half fuel capacity.
- The vessel is to be trimmed at even keel or at a trim by stern not exceeding 2 % of the vessel's length.
- The vessel is to be able to maintain a fixed course for not less than 10 minutes while pulling as specified in items b) or c) and f).
- The test is to be performed with a wind speed not exceeding 5 m/sn.
- The current at the test location is not to exceed 1 knot in any direction.

- The load cell used for the test are to be approved by **TL** and be calibrated at least once a year. The accuracy of the load cell are to be ± 2 % within the temperature range of - 10 ºC to + 40 ºC and within the range of 25 to 200 tonnes tension.

- An instrument giving a continuous read-out and also a recording instrument recording the bollard pull graphically as a function of the time are both to be connected to the load cell. The instruments are to be placed and monitored ashore, or on board if measurements are transmitted by radio link.

- The load cell are to be fitted between the eyes of the towline and the bollard.

- The figure certified as the vessel's continuous bollard pull is to be the towing force recorded as being maintained without any tendency to decline for a duration of not less than 10 minutes.

- Certification of bollard pull figures recorded when running the engine(s) at overload, reduced rpm or with a reduced number of main engines or propellers operating can be given and noted on the certificate.

- A communication system is to be established between the vessel and the person(s) monitoring the load cell and the recording instrument ashore, by means of VHF or telephone connection, for the duration of the test.

- The test results are to be made available to **TL** surveyor immediately upon conclusion of the test programme.

6.2.3 Board test of towing winches

After installation on board, the safe operation of the winch(es) from all control stands has to be checked; it has to be proved that in both cases, with the drum braked and during hauling and releasing, the respective quick-release mechanism for the drum operates well

.

These checks may be combined with the Bollard Pull Test, see 6.2.2.

The towing winch has to be subjected to a trial during the bollard pull test to a test load corresponding to the holding power of the winch.

6.2.4 The Surveyor certifies the initial bollard test by an entry into the Test Certificate for Towing Hooks.

6.3 Recurrent tests of towing gear

The following tests are to be applied to all tugs classed by **TL** unless otherwise required by the Administration.

The Surveyor certifies the satisfactory recurrent test.

6.3.1 Towing hooks

6.3.1.1 The functional safety of towing hook and slip device is to be checked by the ship's master at least once a month.

6.3.1.2 Following initial testing on board, towing hooks with mechanical and/or pneumatic slip devices have to be removed every 2,5 years, thoroughly examined and exposed to test force $\mathbf{F_T}$ on a recognized testing facility. Upon reinstallation of the hook on the tug, the slip device has to be subjected to an operational trial by releasing the hook without load. The release forces at the hook and at the bridge have to be measured.

For avoiding dismounting of these towing hooks, the test force $\mathbf{F_T}$ can also be produced by fastening in front of the first tug towed to the bollard, the hook of which is intended to be tested, another tug with a design force $\mathbf{F_D}$ which is sufficient to jointly reach the required test force $\mathbf{F_T}$ according to Table 29.1. Slipping has to be effected whilst both tugs are pulling with full test force.

6.3.1.3 Following initial testing on board, towing hooks with hydraulic slip device are to be subjected to a functional test on board every 2,5 years. They are ready for operation with the towrope loosely resting on the hook. The release forces required at the hook and at the bridge have to be measured. Additionally all components are to be thoroughly examined. Every 5 years the towing hook has to be pulled against a bollard.

6.3.1.4 Particular attention has to be paid to the proper functioning of all gear components

E. Anchoring/ Mooring Equipment

1. Equipment Number

For tugs of unrestricted service, anchoring and mooring equipment are to be provided according to Section 17, B.

Upon requested by the owner for tugs with equipment number 205 or less, using of one anchor as indicated in Section 17 Table 17.1 or alternatively one anchor of one-half the mass indicated in the abovementioned table may be considered by special approval of **TL**.

However, for the determination of the equipment number, in the formula given Section 17, B. the following may be substituted for the term 2 · h · **B**

$$2\ (a \cdot \mathbf{B} + \Sigma\, h_i \cdot b_i)$$

where;

a, B and h_i are defined in Section 17,B.

b_i is the breadth of the widest superstructure or deckhouse of each tier having a breadth greater than **B**/4.

2. Equipment for Restricted Services

2.1 For the equipment of tugs for restricted range of service the reduction mentioned in Section 17 apply. The equipment for tugs in L1 or L2 (harbor service) may be reduced according to **TL**'s approval.

2.2 The stream anchor specified in Section 17, Table 17.2 is not required for tugs.

F. Intact Stability

The vessel is accepted as having adequate stability, if at least the following sets of criteria are met:

- The intact stability requirement of IMO Res. MSC.267 (85), Part A Chapter 2.2,

- Alternatively, if applicable, the intact stability requirement of IMO Res. MSC.267 (85), Part B Chapter 2.4

- Additionally, the vessel should be met one of the following sets of criteria:

Criteria Set A

- The residual area between a righting lever curve and a heeling lever curve developed from 70 % of the maximum bollard pull force acting in 90° to the ship-length direction should not be less than 0.09 mrad. The area has to be determined between the first interception of the two curves and the second interception or the angle of down flooding whichever is less.

- Alternatively, the area under a righting lever curve should not be less than 1,4 times the area under a heeling lever curve developed from 70 % of the maximum bollard pull force acting in 90° to ship-length direction. The areas are to be determined between 0° and the 2nd interception or the angle of down flooding whichever is less.

The heeling lever curve should be derived by using the following formula:

$$b_{h1} = \frac{0.7 \cdot T \cdot H \cdot \cos\theta}{9.81 \cdot \Delta}$$

b_{h1} = Heeling arm [m],

T = Maximum bollard pull [kN],

H = Vertical distance [m] between the towing hook and the centre of the propeller,

Δ = Loading condition displacement [t],

θ = Heeling angle [°].

Criteria Set B

The residual area between a righting curve and heeling curve developed from the maximum bollard pull force acting in 90° to ship-length direction is not to be less than 0.011 mrad. The area is to be determined between the first interception of the two curves and θ_D.

where θ_D is the heeling angle, to be taken as the lowest of:

- the angle of where the maximum GZ occurs
- the angle of downflooding
- 40°

The heeling lever curve should be derived by using the following formula:

$$b_{h2} = \frac{0.7 \cdot T \cdot H \cdot c \cdot \cos\theta}{9.81 \cdot \Delta}$$

b_{h2} = Heeling arm [m],

T = Maximum bollard pull [kN],

where this force is unknown, it can be assumed equal to:

T = 0.179 P for propellers not fitted with nozzles

= 0.228 P for propellers fitted with nozzles

P = Maximum continuous power of the propulsion engine [kW]

H = Vertical distance [m] between the towing hook, or equivalent fitting, and half draught corresponding to Δ [m]

c = coefficient to be taken equal to:

= 1.0 for ships with azimuth propulsion

= 0.65 for ships with non-azimuth propulsion

Δ = Loading condition displacement [t],

θ = Heeling angle [°].

Table 29.3 - Additional equipment for salvage tugs

Arrangement of equipment	Number of items
Fixed or movable drainage pumps having approximately the same capacity **(1) (2) (3)**	2 or more pumps of total capacity ≥ 400 m^3/h
Fire pumps each capable of throwing two simultaneous jets of water having a horizontal reach not less than 30 m **(4)**	2 pumps, each having a capacity ≥ 60 m^3/h
Breathing apparatuses for divers	2
Gas masks with filter	2
Cargo boom	1, with service load ≥ 1 t
Power operated winch capable of producing an adequate pull	1
Water stops to stop leaks of approximately 1 x 2 m	4
Complete set of equipment for flame cutting with at least 25 metres of flexible piping	1
Drain hoses	at least 20 m per pump
Fire hoses	10
Connections for fire main	at least 3
Power operated diver's compressor, with associated equipment **(5)**	1
Additional towline equipment	1
Lamps for underwater operation	2
Floodlight of power ≥ 500 W	1
Working lamps	2
Winding drums with wire ropes	see **(6)**
Electrical cables, each not less than 100 metres long and capable of supplying at least 50 kW	3
Tackles with lifting capacity of 1 t	2
Tackles with lifting capacity of 3 t	2
Radar with a range not less than 24 nautical miles	1
Echo-sounding device with a range of 100 m	1
Hydraulic jackets with lifting capacity of 10 t	2
Hydraulic jackets with lifting capacity of 20 t	2
Portable electrical drill with a set of twist bits having diameters up to 20 mm	1

(1) *For each pump fitted on board, a suction strainer and, in the case of non self-priming pumps, a foot valve, are also to be provided.*

(2) *Where portable pumps are used, they are to be capable of effectively operating even with transverse and longitudinal inclinations up to 20°.*

(3) *These pumps are additional to the drain pumps intended for the drainage service of the ship.*

(4) *These pumps may be the same required for drainage purposes provided they have an adequate head.*

(5) *As an alternative, a compressor for recharging the oxygen tanks of divers may be provided together with two complete sets of equipment for divers.*

(6) *Winding drums fitted on board are to be capable of housing wire ropes of suitable size and length not normally less than 350 m.*

SECTION 30

PASSENGER SHIPS

A. General

1. Application

1.1 The requirements in this Section are intended to apply to ships carrying more than 12 passengers on international voyages.

1.2 Ships dealt with in this Section are to comply with the requirements of Section 1÷21 and additionally with the requirements of this Section.

2. Class Notation

2.1 Ships built in accordance with the requirements of this Section and with the applicable requirements of Chapter II-1 and II-2 of the SOLAS 74 are to be assigned the class notation **"PASSENGER SHIP".**

2.2 Passenger ships are to be assigned the symbol **FS** related with damage stability according to the relevant requirements.

3. Documentation

In addition to the documents listed in Section 1÷21, the following documents are to be submitted for approval:

- Drawings showing the external openings and the closing devices thereof.
- Drawings showing the watertight subdivision as well as internal openings and the closing devices thereof.
- Damage stability calculation in accordance with SOLAS as amended and the related Explanatory Notes
- Damage control plan and damage control booklet containing all data essential for maintaining the survival capability
- Stability information booklet.

B. Subdivision

1. Permissible Length of Compartments

Passenger ships are to be as efficiently subdivided as is possible having regard to the nature of the service for which they are intended. The degree of subdivision is to vary with the length of the ship and with the service. The maximum permissible length of a compartment is to be determined according to SOLAS 74, Reg. II-1/4.3.

2. Special Requirements Concerning Subdivision

2.1 Where in a portion or portions of a ship the watertight bulkheads are carried to a higher deck than in the remainder of the ship and it is desired to take advantage of this higher extension of the bulkheads in calculating the floodable length, separate bulkhead deck may be used for each such portion of the ship provided that:

2.1.1 The sides of the ship are extended throughout the ship's length to the deck corresponding to the upper margin line and all openings in the shell plating below this deck throughout the length of the ship are treated as being below a margin line, and

2.1.2 The two compartments adjacent to the step in the bulkhead deck are each within the permissible length corresponding to their respective margin lines, and, in addition, their combined length does not exceed twice the permissible length based on the lower margin line.

2.2 In ships of 100 m. in length and upwards, one of the main transverse bulkheads abaft the forepeak are to be fitted at a distance from the forward perpendicular which is not greater than the permissible length.

2.3 A main transverse bulkhead may be recessed provided that all parts of the recess lie inboard of vertical surfaces on both sides of the ship, situated at a distance from the shell plating equal to one fifth the breadth of the ship and measured at right angles to the centerline at the level of the deepest subdivision load line. Any part of a recess which lies outside these limits is to be dealt with as a step.

2.4 A main transverse bulkhead may be stepped provided that it meets one of the following conditions:

2.4.1 The combined length of the two compartments, separated by the bulkhead in question, does not exceed either 90 % of the floodable length or twice the permissible length, except that, in ships having a factor of subdivision greater than 0,9, the combined length of the two compartments in question is not to exceed the permissible length.

2.4.2 Additional subdivision is provided in way of the step to maintain the same measure of safety as that secured by a plane bulkhead.

2.4.3 The compartment over which the step extends does not exceed the permissible length corresponding to a margin line taken 76 mm. below step.

2.5 Where a main transverse bulkhead is recessed or stepped, an equivalent plane bulkhead is to be used in determining the subdivision.

2.6 If the distance between two adjacent main transverse bulkheads, or their equivalent plane bulkheads, or the distance between the transverse planes passing through the nearest stepped portions of the bulkheads, is less than 3 m. + 3 % of the length of the ship or 11 m, whichever is the less, only one of these bulkheads is to be regarded as forming part of the subdivision of the ship.

2.7 Where a main transverse watertight compartment contains local subdivision and it can be shown to the satisfaction of **TL** that, after any assumed side damage extending over a length of 3 m + 3 % of the length of the ship, or 11 m, whichever is the less, the whole volume of the main compartment will not to be flooded a proportionate allowance may be made in the permissible length otherwise required for such compartment. In such a case the volume of effective buoyancy assumed on the undamaged side are not be greater than that assumed on the damaged side.

3. Peak and Machinery Space Bulkheads, Shaft Tunnels

3.1 A collision bulkhead is to be fitted which is to be watertight up to the bulkhead deck. This bulkhead is to be located at a distance from the forward perpendicular of not less than 0.05L or 10 m, whichever is the less, and, except as may be permitted by the Society, not more than 0.08L or 0.05L + 3 m., whichever is the greater.

3.2 Where any part of the ship below the waterline extends forward of the forward perpendicular, e.g. a bulbous bow, the distances stipulated in item 3.1 are to be measured from the point either (whichever gives the smallest measurement):

3.2.1 At the mid-length of such extension; or

3.2.2 At a distance 0,015L forward of the forward perpendicular; or

3.2.3 At a distance 3 m. forward of the forward perpendicular.

3.3 The bulkhead may have steps or recesses provided they are within the limits prescribed in item 3.1 or 3.2.

3.4 No doors, manholes, access openings, ventilation ducts or any other openings are to be fitted in the collision bulkhead below the bulkhead deck.

3.5.1 Except as provided in item 3.5.2, the collision bulkhead may be pierced below the bulkhead deck by not more than one pipe for dealing with fluid in the forepeak tank, provided that the pipe is fitted with a screwdown valve capable of being operated from above the bulkhead deck, the valve chest being secured inside the forepeak to the collision bulkhead. The Society may, however, authorize the fitting of this valve on the after side of the collision bulkhead provided that the valve is readily accessible under all service conditions and the space in which it is located is not a cargo space. All valves are to be of steel, bronze or other approved ductile material. Valves of ordinary cast iron or similar material are not acceptable.

3.5.2 If the forepeak is divided to hold two different kinds of liquids the Society may allow the collision bulkhead to be pierced below the bulkhead deck by two pipes, each of which is fitted as required by item 3.5.1, provided the Society is satisfied that there is no practical alternative to the fitting of such a second pipe and that,

having regard to the additional subdivision provided in the forepeak, the safety of the ship is maintained.

3.6 Where a long forward superstructure is fitted, the collision bulkhead is to be extended weathertight to the deck next above the bulkhead deck. The extension need not be fitted directly above the bulkhead below, provided it is located within the limits prescribed in item 3.1 or 3.2 with the exception permitted by item 3.7 and that the part of the deck which forms the step is made effectively weathertight.

The extension is to be so arranged as to preclude the possibility of the bow door causing damage to it in the case of damage to, or detachment of, a bow door.

3.7 Where bow doors are fitted and a sloping loading ramp forms part of the extension of the collision bulkhead above the bulkhead deck, the ramp is to be weathertight over its complete length. Ramps not meeting the above requirements are to be disregarded as an extension of the collision bulkhead.

3.8 The number of openings in the extension of the collision bulkhead above the bulkhead deck is to be restricted to the minimum compatible with the design and normal operation of the ship. All such openings are to be capable of being closed watertight.

3.9 Bulkheads are to be fitted separating the machinery space from cargo and accommodation spaces forward and aft and made watertight up to the bulkhead deck. An afterpeak bulkhead is also to be fitted and made watertight up to the bulkhead deck. The afterpeak bulkhead may, however, be stepped below the bulkhead deck, provided the degree of safety of the ship as regards subdivision is not thereby diminished.

3.10 In all cases stern tubes are to be enclosed in watertight spaces of moderate volume. The stern gland are to be situated in a watertight shaft tunnel or other watertight space separate from the stern tube compartment and of such volume that, if flooded by leakage through the stern gland, the margin line will not be submerged.

C. Openings in Watertight Bulkheads

1. General

1.1 The number of openings in watertight bulkheads are to be reduced to the minimum compatible with the design and proper working of the ship, satisfactory means are to be provided for closing these openings.

1.2 Where pipes, scuppers, electric cables, etc. are carried through watertight subdivision bulkheads, arrangements are to be made to ensure the watertight integrity of the bulkheads.

1.3 Valves not forming part of a piping system are not to be permitted in watertight subdivision bulkheads.

1.4 Lead or other heat sensitive materials are not to be used in systems which penetrate watertight subdivision bulkheads, where deterioration of such systems in the event of fire would impair the watertight integrity of the bulkheads.

1.5 No doors, manholes, or access openings are permitted in watertight transverse bulkheads dividing a cargo space from an adjoining cargo space, except as provided in items 4 and 5.

2. Openings in Machinery Spaces

2.1 Not more than one door, apart from the doors to shaft tunnels, may be fitted in each main transverse bulkhead within spaces containing the main and auxiliary propulsion machinery including boilers serving the needs of propulsion.

Where two or more shafts are fitted, the tunnels are to be connected by an intercommunicating passage. There are to be only one door between the machinery space and the tunnel space where two shafts are fitted and only two doors where there are more than two shafts.

All these doors are to be of the sliding type and be so located as to have their sills as high as practicable. The hand gear for operating these doors from above the bulkhead deck is to be situated outside the spaces containing the machinery.

2.2 Portable plates on bulkheads are not to be permitted except in machinery spaces. The Society may permit not more than one power operated sliding watertight door in each main transverse bulkhead larger than 1.2 m. to be substituted for these portable plates, provided these doors are intended to remain closed during navigation except in case of urgent necessity at the discretion of the master. These doors need not meet the requirements of complete closure by hand operated gear in 90 seconds.

3. Trunkways and Tunnels

3.1 Where trunkways or tunnels for access from crew accommodation to the stokehold, for piping or for other purpose are carried through main transverse bulkheads, they are to be watertight. The access to at least one end of each such tunnel or trunkway, if used as a passage at sea, are to be through a trunk extending watertight to a height sufficient to permit access above the bulkhead deck. The access to the other end of the trunkway or tunnel may be through a watertight door of the type required by its location in the ship. Such trunkways or tunnels are not to extend through the first subdivision bulkhead abaft the collision bulkhead.

3.2 Where it is proposed to fit tunnels piercing main transverse watertight bulkheads, these are to be specially considered.

3.3 Where trunkways in connection with refrigerated cargo and ventilation or forced draught trunks are carried through more than one watertight bulkhead, the means of closure at such openings is to be operated by power and be capable of being closed from a central position situated above the bulkhead deck.

4. Openings in Cargo Spaces

4.1 If **TL** is satisfied that such doors are essential, watertight doors of satisfactory construction may be fitted in watertight bulkheads dividing cargo between deck spaces. Such doors may be hinged, rolling or sliding doors but are not to be remotely controlled. They are to be fitted at the highest level and as far from the shell plating as practicable, but in no case are the outboard vertical edges be situated at a distance from the shell plating which is less than one fifth of the breadth of the ship, such distance being measured at right angles to the centerline at the level of the deepest subdivision draught.

4.2 Should any of the doors be accessible during the voyage, they are to be fitted with a device which prevents unauthorized opening. When it is proposed to fit such doors, the number and arrangements are to be specially considered by the Society.

5. Openings in Passenger Ships Carrying Goods Vehicles and Accompanying Personnel

5.1 This requirement applies to passenger ships designed or adapted for the carriage of goods vehicles and accompanying personnel where the total number of persons on board exceeds 12.

5.2 If in such ship the total number of passengers which includes personnel accompanying vehicles does not exceed

$$N = 12 + \frac{A}{25}$$

Where A = total deck area of spaces available for the stowage of the goods vehicles [m^2] and where the clear height at the stowage position and at the entrance to such spaces is not less than 4 m, the provisions of item 4. In respect of watertight doors apply except that the doors may be fitted at any level in watertight bulkheads dividing cargo spaces.

Additionally, indicators are required on the navigation bridge to show automatically when each door is closed and all door fastenings are secured.

D. Double Bottom

1. Arrangement

A double bottom is to be fitted extending from the fore peak bulkhead to the after peak bulkhead, as far as practicable and compatible with the design and proper working of the ship.

2. Inner bottom

Where a double bottom is required to be fitted, the inner bottom is to be continued out to the ship's sides in such a manner as to protect the bottom of the turn of the bilge. Such protection is to be deemed satisfactory if the inner bottom is not lower at any part than a plane parallel with the keel line and which is located not less than a vertical distance h measured from the keel line, as calculated by the formula:

$$H = B/20$$

However, in no case is the value of h to be less than 760 mm, need not be taken as more than 2.000 mm.

3. Small Wells in Double Bottom

Small wells constructed in the double bottom in connection with drainage arrangements of holds, are not to extend downwards more than necessary. A well extending to the outer bottom is, however, permitted at the after end of the shaft tunnel. Other wells may be permitted by the Society if satisfied that the arrangements give protection equivalent to that afforded by a double bottom complying with this rule. In no case is the vertical distance from the bottom of such a well to a plane coinciding with the keel line be less than 500 mm.

4. Other Details

4.1 A double bottom need not be fitted in way of watertight tanks, including dry tanks of moderate size, provided the safety of the ship, in the event of bottom or side damage, is not, thereby impaired.

4.2 If the watertight floors are not in line with the main transverse bulkheads, this has to be taken into consideration for the watertight subdivision.

4.3 Any part of a ship that is not fitted with a double bottom in accordance with items D.1 and E.4.1, is to be capable of withstanding bottom damages as specified in item 4.5, in that part of the ship.

4.4 In the case of unusual bottom arrangements, it is to be demonstrated that the ship is capable of withstanding bottom damages as specified in item 4.5.

4.5 Compliance with items 4.3 or 4.4 is to be achieved by demonstrating that s_i when calculated in accordance with regulation 7-2 of SOLAS 74, is not less than 1 for all service conditions when subject to a bottom damage assumed at any position along the ship's bottom and with an extent specified in subparagraph 4.5.2 for the affected part of the ship:

4.5.1 Flooding of such spaces is not to render emergency power and lighting, internal communication, signals or other emergency devices inoperable in other parts of the ship.

4.5.2 Assumed extent of damage is to be as follows:

	For 0,3L from the forward perpendicular of the ship	**Any other part of the ship**
Longitudinal extent	1/3 $L^{2(3}$ or 14.5 m, whichever is less	1/3 $L^{2(3}$ or 14.5 m, whichever is less
Transverse extent	B/6 or 10 m, whichever is less	B/6 or 5 m, whichever is less
Vertical extent, measured from the keel line	B/20 or 2 m, whichever is less	B/20 or 2 m, whichever is less

4.5.3 If any damage of a lesser extent than the maximum damage specified in 4.5.2 would result in a more severe condition, such damage should be considered.

4.6 In case of large lower holds, the Society may require an increased double bottom height of not more than B/10 or 3 m, whichever is less, measured from the keel line. Alternatively, bottom damages may be calculated for these areas, in accordance with item 4.5, but assuming an increased vertical extent.

E. Openings in the Shell Plating Below the Bulkhead Deck

1. General

1.1 The number of openings in the shell plating is to be reduced to the minimum compatible with the design and proper working of the ship.

1.2 The arrangement and efficiency of the means for closing any opening in the shell plating must be consistent with its intended purpose and the position in which it is fitted.

2. Arrangement of Sidescuttles

2.1 Subject to the requirements of International Convention on Load Lines (ICLL) in force, no sidescuttle is to be fitted in such a position that its sill is below a line drawn parallel to the bulkhead deck at side and having its lowest point 2,5 % of the breadth of the ship above the deepest subdivision load line, or 500 mm, whichever is the greater.

2.2 All sidescuttles the sills of which are below the margin line, as permitted by item 2.1, are to be of such construction as will effectively prevent any person opening them without the consent of the master of the ship.

2.3 Efficient hinged inside deadlights so arranged that they can be easily and effectively closed and secured watertight, are to be fitted to all sidescuttles except that abaft one eighth of the ship's length from the forward perpendicular and above a line drawn parallel to the bulkhead deck at side and having its lowest point at a height of 3.7 m + 2.5 % of the breadth of the ship above the deepest subdivision load line, the deadlights may be portable in passenger accommodation unless the deadlights are required by ICLL in force to be permanently attached to their positions.

2.4 Automatic ventilating sidescuttles is not to be fitted in the shell plating below the margin line without the special sanction of the Society.

3. Inlets, Scuppers and Discharges

3.1 The number of scuppers, sanitary discharges and similar openings in the shell plating is to be reduced to the minimum either by making each discharge serve for as many as possible of the sanitary and other pipes, or in any other satisfactory manner.

3.2 All inlets and discharges in the shell plating are to be fitted with efficient and accessible arrangements for preventing the accidental admission of water into the ship.

3.2.1 Subject to the requirements of the ICLL in force, and except as provided in item 3.3, each separate discharge led through the shell plating from spaces below the margin line are to be provided with either one automatic non-return valve fitted with positive means of closing it from above the bulkhead deck or with two automatic non-return valves without positive means of closing, provided that the inboard valve is situated above the deepest subdivision load line and is always accessible for examination under service condition. Where a valve with positive means of closing is fitted, the operating position above the bulkhead deck are always to be readily accessible and means are to be provided for indicating whether the valve is open or closed.

3.2.2 The requirements of the ICLL in force are to apply to discharges led through the shell plating from spaces above the margin line.

3.3 Machinery space main and auxiliary sea inlets and discharges in connection with the operation of machinery are to be fitted with readily accessible valves between the pipes and the shell plating or between the pipes and fabricated boxes attached to the shell plating. The valves may be controlled locally and are to be provided with indicators showing whether they are open or closed.

3.4 Moving parts penetrating the shell plating below the deepest subdivision draught are to be fitted with a watertight sealing arrangement. The inboard gland is to be located within a watertight space of such volume that, if flooded, the bulkhead deck is not to be submerged. The Society may require that, if such compartment is flooded, essential or emergency power and lighting, internal communication, signals or other emergency devices must remain available in other parts of the ship.

3.5 All shell fittings and valves required by this rule are to be of steel, bronze or other approved ductile material. Valves of ordinary cast iron or similar material are not acceptable. All pipes to which this rule refers are to be of steel or other equivalent material.

4. Access and Cargo Openings

Gangway, cargo and fuelling ports fitted below the bulkhead deck are to be watertight and in no case be so fitted as to have their lowest point below the deepest subdivision draught.

5. Other Openings

The inboard opening of each ash-chute, rubbish-chute, etc. is to be fitted with an efficient cover.

If the inboard opening is situated below the bulkhead deck, the cover is to be watertight, and in addition an automatic non-return valve is to be fitted in the chute in an easily accessible position above the deepest subdivision draught.

F. Watertight Integrity Above the Bulkhead Deck

1. General

All reasonable and practicable measures are to be taken to limit the entry and spread of water above the bulkhead deck. Such measures may include partial bulkheads or webs. When partial watertight bulkheads and webs are fitted on the bulkhead deck, above or immediate vicinity of watertight bulkheads, they are to have watertight shell and bulkhead deck connections so as to restrict the flow of water along the deck when the ship is in a heeled damaged condition. Where the partial watertight bulkhead does not line up with the bulkhead below, the bulkhead deck between is to be made effectively watertight. Where openings, pipes, scuppers, electric cables, etc. are carried through the partial watertight bulkheads or decks within the immersed part of the bulkhead deck, arrangements are to be made to ensure the watertight integrity of the structure above the bulkhead deck.

2. Bulkhead Deck

All opening in the exposed weather deck is to have coamings of ample height and strength and is to be provided with effective means for expeditiously closing them weathertight. Freeing ports, open rails and scuppers are to be fitted as necessary for rapidly clearing the weather deck of water under all weather conditions.

3. Air Pipes

The open end of air pipes terminating within a superstructure is to be at least 1 m above the waterline when the ship heels to an angle of 15º, or the maximum angle of heel during intermediate stage of flooding, as determined by direct calculation, whichever is the greater. Alternatively, air pipes from tanks other than oil tanks may discharge through the side of the superstructure.

4. Means for Closing Openings

Sidescuttles, gangway, cargo and fuelling ports and other means for closing openings in the shell plating above the bulkhead deck are to be of efficient design and construction and of sufficient strength having regard to the space in which they are fitted and their position relative to the deepest subdivision draught.

5. Deadlights

Efficient inside deadlights, so arranged that they can be easily and effectively closed and secured watertight, are to be provided for all sidescuttles to spaces below the first deck above the bulkhead deck.

G. Bulkhead Doors

1. General

1.1 Watertight doors, except as provided in items C,4 and C,5, are to be power-operated sliding doors complying with the requirements of item 2. capable of being closed simultaneously from the central operating console at the navigation bridge in not more than 60 s with the ship in the upright position.

1.2 The means of operation whether by power or by hand of any power operated sliding door is to be capable of closing the door with the ship listed to 15º either way. Consideration is also to be given to the forces which may act on either side of the door as may

be experienced when water is flowing through the opening applying a static head equivalent to a water height of at least 1 m. above the sill on the centerline of the door.

1.3 Watertight door controls, including hydraulic piping and electric cables, are to be kept as close as practicable to the bulkhead in which the doors are fitted, in order to minimize the likelihood of them being involved in any damage which the ship may sustain. The positioning of watertight doors and their controls are to be such that if the ship sustains damage within one fifth of the breadth of the ship, such distance being measured at right angles to the centerline at the level of the deepest subdivision load line, the operation of the watertight doors clear of the damaged portion of the ship is not impaired.

1.4 All power operated sliding watertight doors are to be provided with means of indication which will show at all remote operating positions whether the doors are open or closed. Remote operating positions are only to be at the navigation bridge and at the location where hand operation above the bulkhead deck is required.

2. Operation and Control of Doors

2.1 Each power operated sliding watertight door:

2.1.1 Is to have a vertical or horizontal motion;

2.1.2 Is to be normally limited to a maximum clear opening of 1,2 m. The Society may permit larger doors only to the extent considered necessary for the effective operation of the ship provided that other safety measures, including the following, are taken into consideration:

2.1.2.1 Special consideration is to be given to the strength of the door and its closing appliances in order to prevent leakages;

2.1.2.2 The door is to be located outside the damage zone B/5;

2.1.3 Is to be fitted with the necessary equipment to open and close the door using electric power, hydraulic power, or any other form of power;

2.1.4 Is to be provided with an individual hand-operated mechanism. It is to be possible to open and close the door by hand at the door itself from either side, and in addition, close the door from an accessible position above the bulkhead deck with an all around crank motion or some other movement providing the same degree of safety. Direction of rotation or other movement is to be clearly indicated at all operating positions. The time necessary for the complete closure of the door, when operating by hand gear, is not to exceed 90 s with the ship in the upright position.

2.1.5 It is to be provided with controls for opening and closing the door by power from both sides of the door and also for closing the door by power from the central operating console at the navigation bridge;

2.1.6 It is to be provided with an audible alarm, distinct from any other alarm in the area, which will sound whenever the door is closed remotely by power and which is to sound for at least 5 s but no more than 10 s before the door begins to move and is to continue sounding until the door is completely closed. In the case of remote hand operation it is sufficient for the audible alarm to sound only when the door is moving. Additionally, in passenger areas and areas of high ambient noise the Society may require the audible alarm to be supplemented by an intermittent visual signal at the door; and

2.1.7 Is to have an approximately uniform rate of closure under power. The closure time, from the time the door begins to move to the time it reaches the completely closed position, is in no case to be less than 20 s or more than 40 s with the ship in the upright position.

2.2 The electric power required for power operated sliding watertight doors are to be supplied from the emergency switchboard either directly or by a dedicated distribution board situated above the bulkhead deck. The associated control, indication and alarm circuits are to be supplied from the emergency switchboard either directly or by a dedicated distribution board situated above the bulkhead deck and be capable of being automatically supplied by the transitional source of emergency electrical power in the event of failure of either the main or emergency source of electrical power.

2.3 Power operated sliding watertight doors are to have either:

2.3.1 A centralized hydraulic system with two independent power sources each consisting of a motor and pump capable of simultaneously closing all doors. In addition, there are to be for the whole installation hydraulic accumulators of sufficient capacity to operate all the doors at least three times, i.e. closed-open-closed, against an adverse list of 15º. This operating cycle is to be capable of being carried out when the accumulator is at the pump cut-in pressure. The fluid used is to be chosen considering the temperatures liable to be encountered by the installation during its service. The power operating system is to be designed to minimize the possibility of having a single failure in the hydraulic piping adversely affect the operation of more than one door. The hydraulic system is to be provided with a low-level alarm for hydraulic fluid reservoirs serving the power-operated system and a low gas pressure alarm or other effective means of monitoring loss of stored energy in hydraulic accumulators. These alarms are to be audible and visual and are to be situated on the central operating console at the navigation bridge; or

2.3.2 An independent hydraulic system for each door with each power source consisting of a motor and pump capable of opening and closing the door. In addition, there are to be a hydraulic accumulator of sufficient capacity to operate the door at least three times, i.e. closed-open-closed, against an adverse list of 15º. This operating cycle is to be capable of being carried out when the accumulator is at the pump cut-in pressure. The fluid used is to be chosen considering the temperatures liable to be encountered by the installation during its service. A low gas pressure group alarm or other effective means of monitoring loss of stored energy in hydraulic accumulators is to be provided at the central operating console on the navigation bridge. Loss of stored energy indication at each local operating position is also to be provided; or

2.3.3 An independent electrical system and motor for each door with each power source consisting of a motor capable of opening and closing the door. The power source is to be capable of being automatically supplied by the transitional source of emergency electrical power in the event of failure of either the main or emergency source of electrical power and with sufficient capacity to operate the door at least three times, i.e. closed-open-closed, against an adverse list of 15 º.

2.3.4 For the systems specified in 2.3.1, 2.3.2 and 2.3.3, provisions should be made as follows:

Power systems for power-operated watertight sliding doors are to be separate from any other power system. A single failure in the electric or hydraulic power-operated systems excluding the hydraulic actuator is not to prevent the hand operation of any door.

2.4 Control handles are to be provided at each side of the bulkhead at a maximum height of 1,6 m above the floor and are to be so arranged as to enable persons passing through the doorway to hold both handles in the open position without being able to set the power closing mechanism in operation accidentally. The direction of movement of the handles in opening and closing the door is to be in the direction of door movement and is to be clearly indicated.

2.5 As far as practicable, electrical equipment and components for watertight doors are to be situated above the bulkhead deck and outside hazardous areas and spaces.

2.6 The enclosures of electrical components necessarily situated below the bulkhead deck are to provide suitable protection against the ingress of water.

2.7 Electric power, control, indication and alarm circuits are to be protected against fault in such a way that a failure in one door circuit is not to cause a failure in any other door circuit. Short circuits or other faults in the alarm or indicator circuits of a door are not to result in a loss of power operation of that door. Arrangements are to be such that leakage of water into the electrical equipment located below the bulkhead deck is not to cause the door open.

2.8 A single electrical failure in the power operating or control system of a power-operated sliding watertight door is not to result in a closed door opening. Availability of the power supply should be continuously monitored at a point in the electrical circuit as near as practicable to each of the motors. Loss of any such power supply should activate an audible and visual

alarm at the central operating console at the navigation bridge.

3. Central Operating Console

3.1 The central operating console at the navigation bridge is to have a “master mode” switch with two modes of control : a “local control” mode which is to allow any door to be locally opened and locally closed after use without automatic closure, and a “door closed” mode which is automatically close any door that is open. The “door closed” mode is to permit doors to be opened locally and is to automatically reclose the doors upon release of the local control mechanism. The “master mode” switch is to normally be in the “local control” mode. The “doors closed” mode is to only be used in an emergency or for testing purpose. Special consideration is to be given to the reliability of the “master mode” switch.

3.2 The central operating console at the navigation bridge is to be provided with a diagram showing the location of each door, with visual indicators to show whether each door is open or closed. A red light is to indicate a door is fully open and a green light is to indicate a door is fully closed. When the door is closed remotely, the red light is to indicate the intermediate position by flashing. The indicating circuit is to be independent of the control circuit for each door.

3.3 It is not to be possible to remotely open any door from the central operating console.

H. Equalization Devices

Unsymmetrical flooding is to be kept to a minimum consistent with efficient arrangements. Where it is necessary to correct large angles of heel, the means adopted is, where practicable, to be self-acting, but in any case where controls to equalization devices are provided they are to be operable from above the bulkhead deck. These fittings together with their controls are to be acceptable to the Society. Suitable information concerning the use of equalization devices is to be supplied to the master of the ship.

I. Construction and Initial Testing of Watertight Bulkheads, Watertight Doors and Watertight Decks

1. Construction and Initial Testing of Watertight Bulkheads

1.1 Each watertight subdivision bulkhead, whether transverse or longitudinal, is to be constructed having scantlings and arrangements capable of preventing the passage of water in any direction under the head of water likely to occur in intact and damaged conditions. In the damaged condition, the head of water is to be considered in the worst situation at equilibrium, including intermediate stages of flooding. In all cases, watertight subdivision bulkheads are to be capable of supporting at least the pressure due to a head of water up to the bulkhead deck.

1.2 Steps and recesses in watertight bulkheads are to be as strong as the bulkhead at the place where each occurs.

1.3 Testing watertight spaces not intended to hold liquids by filling them with water is not compulsory. When testing by filling with water is not carried out, a hose test is to be carried out where practicable. This test is to be carried out in the most advanced stage of the fitting out of the ship. Where a hose test is not practicable because of possible damage to machinery, electrical equipment, insulation or outfitting items, it may be replaced by a careful visual examination of welded connections, supported where deemed necessary by means such as a dye penetrant test or an ultrasonic leak test or an equivalent test. In any case a thorough inspection of the watertight bulkheads is to be carried out.

1.4 The forepeak and double bottom is to be tested with water to a head corresponding to the requirements of item 1.1.

1.5 Tanks which are intended to hold liquids, and which form part of the watertight subdivision of the ship, are to be tested for tightness and structural strength with water to a head corresponding to its design pressure. The water head is in no case to be less than the top of the air pipes or to a level of 2,4 m above the top of the tank, whichever is the greater.

1.6 The tests referred in item 1.4 and 1.5 are for the purpose of ensuring that the subdivision structural arrangements are watertight and are not to be regarded as a test of the fitness of any compartment for the storage of oil fuel or for other special purposes for which a test of a superior character may be required depending on the height to which the liquid has access in the tank or its connections.

2. Construction and Initial Testing of Watertight Doors

2.1 The design, materials and construction of all watertight doors, sidescuttles, gangway and cargo ports, valves, pipes, ash-chutes and rubbish-chutes are to be to the satisfaction to the Society.

2.2 Such valves, doors and mechanisms are to be suitably marked to ensure that they may be properly used to provide maximum safety; and

2.3 The frames of vertical watertight doors are to have no groove at the bottom in which dirt might lodge and prevent the door closing properly.

2.4 Each watertight door is to be tested by water pressure to a head of water they might sustain in a final or intermediate stage of flooding. Where testing of individual doors is not carried out because of possible damage to insulation or outfitting items, testing of individual doors may be replaced by a prototype pressure test of each type and size of door with a test pressure corresponding at least to the head required for the intended location. The prototype test is to be carried out before the door is fitted. The insulation method and procedure for fitting the door on board is to correspond to that of the prototype test. When fitted on board, each door is to be checked for proper seating between the bulkhead, the frame and the door.

3. Construction and Initial Testing of Watertight Decks

3.1 Watertight decks, trunks, tunnels, duct keels and ventilators are to be of the same strength as watertight bulkheads at corresponding levels. The means used for making them watertight, and the arrangements adopted for closing openings in them, is to be to the satisfaction of the Society. Watertight ventilators and trunks are to be carried at least up to the bulkhead deck.

3.2 Where a ventilation trunk passing through a structure penetrates the bulkhead deck, the trunk is to be capable of withstanding the water pressure that may be present within the trunk, after having taken into account the maximum heel angle allowable during intermediate stages of flooding.

3.3 After completion, a hose or flooding test is to be applied to watertight decks and a hose test to watertight trunks, tunnels and ventilators.

J. Stability

1. Intact Stability Information

1.1 Every passenger ship regardless of size is to be inclined upon its completion and the elements of its stability determined.

1.2 Where any alterations are made to a ship so as to materially affect the stability information supplied to the master, amended stability information is to be provided. If necessary, the ship is to be re-inclined. The ship is to be re-inclined if anticipated deviations exceed one of the values specified in item 1.3.

1.3 At periodical intervals not exceeding five years, a lightweight survey is to be carried out to verify any changes in lightship displacement and longitudinal centre of gravity. The ship is to be re-inclined whenever, in comparison with the approved stability information, a deviation from the lightship displacement exceeding 2 % or a deviation of the longitudinal centre of gravity exceeding 1 % of L is found or anticipated.

2. Damage Control Information

There are to be permanently exhibited, or readily available on the navigation bridge, for the guidance of the officer in charge of the ship, plans showing clearly for each deck the boundaries of the watertight compartments, the openings therein with the means of closure and positions of any controls thereof, and the

arrangements for the correction of any list due to flooding. In addition, booklets containing the aforementioned information are to be made available to the officers of the ship.

K. Prevention and Control of Water Ingress

1. All watertight doors are to be kept closed during navigation except that they may be opened during navigation as specified in items 1.3 and 1.4. Watertight doors of width of more than 1.2 m. in machinery spaces as permitted by item C,2.2 may only be opened in the circumstances detailed in that item. Any door which is opened in accordance with this item is to be ready to be immediately closed.

2. Watertight doors located below the bulkhead deck having a maximum clear opening width of more than 1.2 m are to be kept closed when the ship at sea, except for limited period when absolutely necessary.

3. A watertight door may be opened during navigation to permit the passage of passengers or crew, or when work in the immediate vicinity of the door necessitates it being opened. The door must be immediately closed when transit through the door is complete or when the task which necessitated it being open is finished.

4. Certain watertight doors may be permitted to remain open during navigation only if considered absolutely necessary; that is, being open is determined essential to the safe and effective operation of the ship's machinery or to permit passengers normally unrestricted access throughout the passenger area. Such determination is to be made by the Society only after careful consideration of the impact on ship operations and survivability. A watertight door permitted to remain thus open is to be clearly indicated in the ship's stability information and is always to be ready for immediately closed.

5. Portable plates on bulkheads are always to be in place before the ship leaves port, and are not to be removed during navigation except in case of urgent necessity at the discretion of master. The necessary precautions are to be taken in replacing them to ensure that the joints are watertight. Power operated sliding watertight doors permitted in machinery spaces in accordance with item C,2.2 are to be closed before the ship leaves port and are to remain closed during navigation except in case of urgent necessity at the discretion of master.

6. Watertight doors fitted in watertight bulkheads dividing cargo between spaces in accordance with item C,4.1 are to be closed before the voyage commences and are to be kept closed during navigation.

7. Gangway, cargo and fuelling ports fitted below the bulkhead deck are to be effectively closed and secured watertight before the ship leaves port, and are to be kept closed during navigation.

8. The following doors, located above the bulkhead deck, are to be closed and locked before the ship proceeds on any voyage and are to remain closed and locked until the ship is at its next berth:

8.1 Cargo loading doors in the shell or the boundaries of enclosed superstructures;

8.2 Bow visors fitted in position as indicated in item 8.1;

8.3 Cargo loading doors in the collision bulkhead; and

8.4 Ramps forming an alternative closure to those defined in items 8.1 to 8.3 inclusive.

9. Where a door cannot be opened or closed while the ship is at the berth, such a door may be opened or left open while the ship approaches or draws away from the berth, but only so far as may be necessary to enable the door to be immediately operated. In any case, the inner bow door must be kept closed.

10. Notwithstanding the requirements of items 8.1 and 8.4, the Administration may authorize that particular doors can be opened at the discretion of the master, if necessary for the operation of the ship or the embarking and disembarking of passengers when the ship is at safe anchorage and provided that the safety of the ship is not impaired.

11. The master is to ensure that an effective system of supervision and reporting of the closing and opening of the doors referred to in item 8 is implemented.

12. Hinged doors, portable plates, sidescuttles, gangway, cargo and bunkering ports and other openings, which are required by these regulations to be kept closed during navigation, are to closed before the ship leaves port.

13. Where, in a between-deck, the sills of any of the sidescuttles referred to in item E,2.2 are below a line drawn parallel to the bulkhead deck at side and having its lowest point 1.4 m. + 2,5 % of the breadth of the ship above the water when the ship departs from any port, all the sidescuttles in that between-deck are to be closed watertight and locked before the ship leaves port, and they are not to be opened before the ship arrives at the next port.

14. Sidescuttles and their deadlights which will not be accessible during navigation are to be closed and secured before the ship leaves port.

15. When a rubbish-chute, etc., is not in use, both the cover and the valve required by item E,5 is to be kept closed and secured.

L. Flooding Detection Systems

A flooding detection systems for watertight spaces below the bulkhead deck for passenger ships carrying 36 or more persons is to be provided based on the guidelines developed by IMO.

M. System Capabilities and Operational Information after a Flooding Casualty

1. Application

Passenger ships having length, as defined in SOLAS Regulation II-1/2.5, of 120 m or more or having three or more main vertical zones shall comply with the provisions of this regulation.

2. Availability of Essential Systems in case of Flooding Damage (1)

A passenger ship constructed on or after 1 July 2010 shall be designed so that the systems specified in SOLAS Regulation II-2/21.4 remain operational when the ship is subject to flooding of any single watertight compartment.

3. Operational Information after a Flooding Casualty

For the purpose of providing operational information to the Master for safe return to port after a flooding casualty, passenger ships constructed on or after 1 JULY 2014 shall have:

- onboard stability computer; or
- shore-based support,

based on guidelines developed by the Organization **(2)**

N. Piping Systems

1. Where the ends of pipes are open to spaces below the bulkhead deck or to tanks, the arrangements are to be such as to prevent other spaces or tanks from being flooded in any damage condition.

Arrangements will be considered to provide safety against flooding if pipes which are led through two or more watertight compartments are fitted inboard of a line parallel to the subdivision draught drawn at 0.2 **B** from the ship's side (**B** is the greatest breadth of the ship at the subdivision draught level).

2. Where the pipe lines cannot be placed inboard of the line 0.2 **B** from the ship's side, the bulkhead must be kept intact by the means stated in 3 ÷ 5.

---

(1) *Refer to the Interim Explanatory Notes for the assessment of passenger ship systems' capabilities after a fire or flooding casualty (MSC.1/Circ.1369).*

(2) *Refer to the Guidelines on operational information for Masters of passenger ships for safe return to port by own power or under tow (MSC.1/Circ.1400).*

3. Bilge lines must be fitted with a non-return valve at the watertight bulkhead through which the pipe is led to the section or at the section itself.

4. Ballast water and fuel lines for the purpose of emptying and filling tanks must be fitted with a shutt-off valve at the watertight bulkhead through which the pipe leads to the open end in the tank. These shut-off valves must be capable of being operated from a position above the bulkhead deck which is accessible at all times and are to be equipped with indicators.

5. Where overflow pipes from tanks which are situated in various watertight compartments are connected to a common overflow system, they must either be led well above the bulkhead deck before they are connected to the common line, or means of closing are to be fitted in the individual overflow lines. The means of closing must be capable of being operated from a position above the bulkhead deck which is accessible at all times. These means of closing are to be fitted at the watertight bulkhead of the compartment in which the tank is fitted and are to be sealed in the open position.

These means of closing may be omitted, if pipe lines pass through bulkheads at such a height above base line and so near the center line that neither in any damaged condition nor in case of maximum heeling occurring in intermediate conditions, they will be below the water line.

6. The means of closing described in 3. and 4. should be avoided where possible by the use of suitably installed piping. Their fitting may only be approved by **TL** in exceptional circumstances.

SECTION 31

SPECIAL PURPOSE SHIPS

A. General

1. Application

1.1 The requirements in this Section are intended to apply to ships which by reason of its function carries on board more than 12 special personnel (e.g. research vessels, training vessel, fish factory ships).

1.2 Ships dealt with in this Section are to comply with the requirements of Section 1÷21, 30 and additionally with the requirements of this Section.

2. Class Notation

2.1 Ships built in accordance with the requirements of this Section are to be assigned the class notation **"SPECIAL PURPOSE SHIP".**

2.2 Special purpose ships are to be assigned the symbol **FS** related with damage stability according to the relevant requirements

3. Documentation

In addition to the documents listed in Section 1÷21, the following documents are to be submitted for approval:

- Drawings showing the internal and external openings and the closing devices thereof.
- Damage stability calculation in accordance with Code of Safety for Special Purpose Ships (IMO Res. MSC.266 (84).
- Damage control plan containing all data essential for maintaining the survival capability
- Stability information booklet in accordance with Code of Safety for Special Purpose Ships (IMO Res. MSC.266 (84).

B. Definitions

1. Crew, means all persons carried on board the ship to provide navigation and maintenance of the ship, its machinery, systems and arrangements essential for propulsion and safe navigation or to provide services for other persons on board.

2. IMDG Code, means the International Maritime Dangerous Goods Code, adopted by the Maritime Safety Committee by resolution MSC.122(75), as amended.

3. Passenger, means every person other than:

3.1 The master and the members of the crew or other persons employed or engaged in any capacity on board a ship on the business of that ship; and

3.2 A child under one year of age.

4. Special personnel, means all persons who are not passengers or members of the crew or children of under one year of age and who are carried on board in connection with the special purpose of that ship or because of special work being carried out aboard that ship. Wherever in this rule the number of special personnel appears as a parameter, it should include the number of passengers carried on board which may not exceed 12.

Special personnel are expected to be able bodied with a fair knowledge of the layout of the ship and to have received some training in safety procedures and the handling of the ship's safety equipment before leaving port and include the following:

4.1 Scientists, technicians and expeditionaries on ships engaged in research, non-commercial expeditions and survey;

4.2 Personnel engaging in training and practical marine experience to develop seafaring skills suitable for a professional career at sea. Such training should be in accordance with a training programme approved by the Administration;

4.3 Personnel who process the catch of fish, whales or other living resources of the sea on factory ships not engaged in catching;

4.4 Salvage personnel on salvage ships, cable-laying personnel on cable-laying ships, seismic

personnel on seismic survey ships, diving personnel on diving support ships, pipe-laying personnel on pipe layers and crane operating personnel on floating cranes; and

4.5 Other personnel similar to those referred to in 4.1 to 4.4 who, in the opinion of the Administration, may be referred to this group.

C. Stability and Subdivision

1. Intact Stability

The intact stability of special purpose ships should comply with the provisions of section 2.5 of Part B of the 2007 Intact Stability Code.

2. Subdivision and Damage Stability

2.1 The subdivision and damage stability of special purpose ships should in general be in accordance with SOLAS Chapter II-1 where the ship is considered a passenger ship, and special personnel are considered passengers, with an R- value calculated in accordance with SOLAS regulation II-1/6.2.3 as follows:

2.1.1 Where the ship is certified to carry 240 persons or more, the R-value is assigned as R;

2.1.2 Where the ship is certified to carry not more than 60 persons, the R-value is assigned as 0,8R;and

2.1.3 For more than 60 (but not more than 240) persons, the R-value should be determined by lineer interpolation between the R-values given in 2.1.1 and 2.1.2. above.

2.2 For special purpose ships to which 2.1.1 applies, the requirements of SOLAS regulation II-1/8 and II-1/8-1 and SOLAS chapter II-1, parts B-2, B-3 and B-4 should be applied as though the ship is a passenger ship and the special personnel are passengers. However, SOLAS regulations II-1/14 and II-1/18 are not applicable.

2.3 For special purpose ships to which 2.1.2 or 2.1.3 applies, except as provided in 2.4, the requirements of SOLAS chapter II-1, parts B-2, B-3 and B-4 should be applied as though the ship is a cargo ship and the special personnel are crew. However, SOLAS regulations II-1/8 and II-1/8-1 need not be applied and SOLAS regulations 1/14 and II-1/18 are not applicable.

2.4 All special purpose ships should comply with SOLAS regulation II-1/9, II-1/13, II-1/19, II-1/20, II-1/21 and II-1/35-1, as though the ship is a passenger ship.

D. Fire Protection

1. Ships Carrying More than 240 Persons

For ships carrying more than 240 persons on board, the requirements of chapter II-2 of SOLAS for passenger ships carrying more than 36 passengers should be applied.

2. Ships Carrying More than 60, But Not More than 240 Persons

For ships carrying more than 60, but not more than 240 persons on board, the requirements of chapter II-2 of SOLAS for passenger ships carrying not more than 36 passengers should be applied.

3. Ships Carrying Not More Than 60 Persons

For ships carrying not more than 60 persons on board, the requirements of chapter II-2 of SOLAS for cargo ships should be applied.

E. Dangerous Goods

1. Special purpose ships sometimes carry a wide range of dangerous goods classified in accordance with the IMDG Code for use in scientific or survey work or a variety of other applications. These dangerous goods are often carried as ships' stores and are used on board and, therefore, they are not subject to the provisions of the IMDG Code. However, dangerous goods that are carried on board for shipment as cargo and are not used on board, are clearly subject to the provisions of the IMDG Code.

2. Notwithstanding the fact that IMDG Code does not apply to dangerous goods carried as ships' stores and used on board, it contains provisions that are relevant to their safe stowage, handling and carriage on special purpose ships.

3. Therefore, it is important to take into account the appropriate provisions of the IMDG Code when planning to carry dangerous goods, so that the relevant provisions can be taken into account to ensure appropriate construction, loading, stowage, segregation and carriage provisions are put into place.

4. Although the IMDG Code does not apply to ships' stores, the master and persons on board the ship responsible for the use of ships' stores should be aware of the provisions of the IMDG Code and should apply them as best practice whenever possible.

5. The issues of stowage, personal protection and emergency procedures when dangerous goods are in use, and the subsequent stowage of opened dangerous goods, should be addressed through a formal safety assessment. In addition to the IMDG Code, to carry out such a formal safety assessment, suppliers and safety data sheets for the dangerous goods should also be consulted.

6. The provisions of the IMDG Code are based on intact and unopened packaging and the removal of explosive articles or substances from a complete pack may invalidate its IMDG Code classification. This aspect should be taken into account when carrying out the formal safety assessment to ensure an equivalent level of safety is maintained when dangerous goods remain after use.

SECTION 32

SUPPLY VESSELS

Page

A. General

1. Application, Character of Classification

1.1 Supply vessels built in accordance with the requirements of this Section will have the notation "SUPPLY VESSEL" affixed to their character of classification.

1.2 The requirements of Sections 1÷21 apply to supply vessels unless otherwise mentioned in this Section.

Guidance :

For supply vessels which shall transport limited amounts of hazardous and/or noxious liquid substances in bulk, the IMO-Resolution A.673 (16), shall be observed.

2. Documents for Approval

The following documents are to be submitted in addition to those specified in Section 1, G.

.1 Drawings showing the external openings and the closing devices thereof (3-fold).

.2 Drawings showing the watertight subdivision as well as internal openings and the closing devices hereof (3-fold).

.3 Damage control plan containing all data essential for maintaining the survival capability (at least 3-fold).

.4 Stability information (at least 3-fold).

B. Shell Plating, Frames

1. Shell Plating

1.1 The thickness of the side shell plating including bilge strake is not to be less than:

$$t = 7 + 0{,}04\,\mathbf{L} \quad [m].$$

1.2 Flat parts of the ship's bottom in the stern area are to be efficiently stiffened.

1.3 Where the stern area is subjected to loads due to heavy cargo, sufficient strengthenings are to be provided.

2. Frames

The section modulus of main and 'tweendeck frames is to be increased by 25 % above the values required by Section 8.

C. Weather Deck

1. The scantlings of the weather deck are to be based on the following design load:

$$p = p_L + c \cdot p_{WD} \quad [kN/m^2]$$

$$p_L = p_{SC} + p_{DC}$$

p_{SC} = The static load on cargo decks according to Section 5, C.4.1

p_{DC} = The dynamic load on cargo decks according to Section 5, D.6.1

$p_{L\,min}$ = 15 kN/mm^2

p_{WD} = Wave pressure load on weather deck according to Section D.4.1

$c = 1{,}28 - 0{,}032 \cdot p_L$ for $p_L < 40$ kN/m^2

$c = 0$ for $p_L \geq 40$ kN/m^2

2. The thickness of deck plating is not to be taken less than 8,0 mm. In areas for the stowage of heavy cargoes the thickness of deck plating is to be suitably increased.

3. On deck stowracks for deck cargo are to be fitted which are effectively attached to the deck. The stowracks are to be designed for a load at an angle of heel of 30°. Under such loads the following stress values are not to be exceeded:

bending stress: $\sigma_b \leq 20/k$ $[N/mm^2]$

shear stress: $\tau \leq 80/k$ $[N/mm^2]$.

k = Material factor according to Section 3, A.2.

4. The thickness of the bulwark plating is not to be less than 7,5 mm.

5. Air pipes and ventilators are to be fitted in protected positions in order to avoid damage by cargo and to minimize the possibility of flooding of other spaces.

6. Due regard is to be given to the arrangement of freeing ports to ensure the most effective drainage of water trapped in pipe deck cargoes. In vessels operating in areas where icing is likely to occur, no shutters are to be fitted in the freeing ports.

D. Superstructures and Deckhouses

1. The plate thickness of the external boundaries of superstructures and deckhouses is to be increased by 1 mm above the thickness as required in Section 13, C.3.2.

2. The section modulus of stiffeners is to be increased by 50 % above the values as required in Section 13, C.3.1.

E. Access to Spaces

1. Access to the Machinery Space

1.1 Access to the machinery space should, if possible, be arranged within the forecastle. Any access to the machinery space from the exposed cargo deck is to be provided with two weathertight closures.

1.2 Due regard is to be given to the position of the machinery space ventilators. Preferably they should be fitted in a position above the superstructure deck or above an equivalent level.

2. Access to Spaces Below the Exposed Cargo Deck

Access to spaces below the exposed cargo deck shall preferably be from a position within or above the superstructure deck.

F. Equipment

Depending on service area and service conditions it may be necessary to choose the anchor chain cable thicker and longer as required in Section 17, D.

G. Anchor Handling

Vessels intended for anchor handling operations in offshore installations in compliance with the requirements in this item will be affixed the additional class notation **AH.**

1. Documents to be submitted

The following documents of anchor handling equipment are to be submitted to **TL** for approval in addition to those specified in A.3 :

- Anchor handling winch and its accessories,
- A-frame or other type of crane jib,
- Stern roller,
- Details of quick anchor release, if applicable.

2. Anchor Handling Winch and Accessories

Anchor Handling winch and accessories are to comply with the requirements of **TL** Rules, Chapter 58, Guidelines for Ocean Towage.

3. A-frame or Other Type of Crane Jib

Where A-frame or other type of crane jib is installed for anchor handling it is to be certified according to **TL** Rules, Chapter 50, Regulation for Lifting Appliances.

4. Stern Roller

Roller and pin connections are to be designed to have a safety factor of 3,0 to the minimum yield point of the material under working load.

H. Carriage of Limited Amounts of Hazardous and Noxious Liquid Substances

Where it is intended to carry limited amounts of hazardous and noxious liquid substances in bulk on offshore supply vessels, the requirements of IMO Resolutin A.673(16) "Guidelines for the Transport Handing of Limited Amounts of Hazardous and Noxious Liquid Sunstances in Bulk in Offshore Support Vessels" as amended by IMO Resolution MSC.236(82) and MEPC.158(55) are to be applied.

Also, regulations of flag state Administration are to be taken into consideration.

SECTION 33

BARGES AND PONTOONS

A. General

1. Application

1.1 The requirements in this section are intended to apply to manned or unmanned non-self-propelled barges and pontoons. The definitions for barge and pontoon are given in item 4.

1.2 Ships dealt with in this Section are to comply with the requirements of Sections 1÷ 21 and additionally with the requirements of this Section.

2. Class Notation

2.1 Vessels built in accordance with the requirements of this Section are to be assigned the class notation **"BARGE"** or **"PONTOON".**

2.2 Barges built for the carriage of special cargo (e.g. liquid or ore cargo) are to be assigned the respective class notations (e.g. Oil Barge, Deck Cargo Barge, etc.).

2.3 For ships assigned the class notation "**PONTOON CRANE**", requirements stated in H shall be complied with additionally.

3. Documentation

In addition to the documents listed in Section 1÷21, the following documents are to be submitted for approval:

- Cargo weight distribution on the deck,

- Equipment weight distribution.

4. Definitions

4.1 Barges are unmanned or manned vessels, normally without self-propulsion, sailing in pushed or towed units. The ratios of the main dimensions of barges are in a range usual for seagoing ships; their construction complies with the usual construction of seagoing ships; their cargo holds are suitable for the carriage of dry or liquid cargo.

4.2 Pontoons are unmanned or manned floating units, normally without self-propulsion. The ratios of the main dimensions of pontoons deviate from those usual for seagoing ships. Pontoons are designed to usually carry deck load or working equipment (e.g. lifting equipment, rams, etc.) and have no holds for the carriage of cargo.

B. Longitudinal Strength

1. The scantlings of longitudinal members of barges and pontoons of 90 m. and more in length are to be determined on the basis of longitudinal strength calculations

2. Longitudinal strength calculations are to be made in accordance with the requirements for main class. But the midship section modulus may be 5 % less than required according to Section 6.

3. The scantlings of the primary longitudinal members (strength deck, shell plating, deck longitudinals, bottom and side longitudinals, etc.) may be 5 % less than required for main class. The minimum thickness and critical thickness specified in the respective Sections are, however, to be adhered to.

4. Longitudinal strength calculations for the condition "Barge, fully loaded at crane" are required, where barges are intended to be lifted on board ship by means of cranes. For this condition, the following stresses are permissible:

bending stress : $\sigma_b = 150 / k$ [N/mm^2]

shear stress : $\tau = 100 / k$ [N/mm^2]

k = Material factor according to Section 3, A.2.

5. For pontoons carrying lifting equipment, rams, etc. or concentrated heavy deck loads, calculation of the stresses in the longitudinal structures under such loads may be required. In such cases the stresses given under 4. are not to be exceeded.

C. Bulkheads

1. Collision Bulkhead

1.1 For barges and pontoons, the position of the

collision bulkhead is to be determined according to Section 11, B.

1.2 Where in barges and pontoons, the form and construction of their ends is identical, so that there is no determined "fore or aft of the ship", a collision bulkhead is to be fitted at each end.

1.3 On barges intended to operate as linked push barges, depending on the aft ship design, a collision bulkhead may be required to be fitted in the aft ship.

2. Hold Bulkheads

2.1 A watertight bulkhead is to be fitted at the aft end of the hold area. In the remaining part of the hull, watertight bulkheads are to be fitted as required for the purpose of watertight subdivision and for transverse strength.

2.2 The scantlings of watertight hold bulkheads and of tank bulkheads are to be determined according to Sections 11.

D. Structural Details

1. Bottom Structure

1.1 The bottom structure may be built as single or double bottom.

1.2 If applied, the height of double bottom is to give easy and safe access to all internal parts. Minimum double bottom height should be 650 mm.

1.3 The bottom structure is to be considered as a grillage system being supported by ship sides and/or bulkheads.

1.4 The bottom forward in barges and pontoons of 90 m and more in length is to be strengthened against slamming. In the related formula, the ballast draught may be substituted by full draught.

Where barges are always operating with horizontal trim, in consideration of the forebody form, relaxations from the requirements concerning strengthening of the bottom forward may be admitted.

2. Fore and Aft Ends

2.1 Where barges have typical ship-shape fore and aft ends, the scantlings of structural elements are to be determined according to those required for main class. The scantlings of fore and aft ends deviating from the normal ship shape are to be determined by applying the formulae analogously such as to obtain equal strength.

2.2 In rake-ended barges, deck and bottom longitudinals are to be attached to the collision bulkhead by brackets and to the end wall by deep diaphragm plates. The longitudinals in the rake are to have spans not greater than 2.5 m.

Where a system incorporating longitudinal trusses is adopted, one truss is to be located at the centerline and at least one between the centerline and the barge side. In no case, the distance between trusses is not to exceed 4,5 m.

3. Local Reinforcements

Local reinforcements are to be provided at places where the hull is heavily stressed.

Heavy point loads should preferably be supported directly by bulkheads.

E. Towing Arrangement

1. All barges and pontoons are to be fitted with towing arrangement.

Towing hooks, winch pins or brackets with their supporting structure are to be capable of withstanding the breaking load of the towline.

2. Acceptable stress levels in the supporting structure resulting from bending moments and shear force are as follows:

Bending stress : $\sigma_b = 210 / k$ [N/mm^2]

Shear stress : $\tau = 130 / k$ [N/mm2]

Equivalent stress : $\sigma_V = \sqrt{\sigma_B^2 + 3\tau^2} = 235/k \quad [N/mm^2]$

k = Material factor according to Section 3, A.2.

F. Steering Arrangement

If installed, the rudder and steering arrangement are to comply with the requirements given for main class.

When calculating rudder force, the ship's speed is not to be taken less than 8 knots.

G. Equipment

1. Barges and pontoons are to be provided with anchoring and mooring equipment, designed for quick and safe operation in all foreseeable service conditions.

2. Unless otherwise specified in this Section, the required equipment of anchors and chain cables and the recommended ropes for manned barges and pontoons are to be determined according to Section 17. A stream anchor is not required.

3. The equipment numeral **EN** for determining the equipment according to Table 17.2, is to be determined for pontoons carrying lifting equipment, rams, etc. by the following formula:

$$EN = D^{2/3} + \mathbf{B} \cdot f_b + f_w$$

D = Displacement of the pontoon in (t] at maximum anticipated draught,

f_b = Distance in [m] between pontoon deck and waterline,

f_w = Wind area of the erections on the pontoon deck in [m^2] which are exposed to the wind from forward, including houses and cranes in upright position.

4. Where more than two anchors are required the third anchor (spare anchor) may be used as a stern anchor.

5. Pontoons having a machinery of sufficient power which are assigned the notation **K** (coastal service) need not have a spare anchor (3rd anchor).

The power of the machinery will be regarded as sufficient if it is not less than:

$$N = 0{,}08 \cdot \mathbf{L} \cdot \mathbf{B} \cdot \mathbf{H} + 40 \text{ [kW]}$$

6. In special cases, upon Owner's request, for unmanned barges and pontoons the number of anchors may be reduced to one and the length of the chain cable to 50 % of the length required by Section 17, item 3.4. The notation "special equipment" will be entered into the Certificate and Register in such cases.

7. If necessary for a special purpose, for barges and pontoons mentioned under 6., the anchor mass may be further reduced by up to 20 %. Upon Owner's request the anchor equipment may be dispensed with. The notation "Without anchor equipment" will be entered into the Certificate and Register in such cases. Additionally the notation "For sea voyages anchor equipment must be available" will be entered into the Certificate.

8. If a wire rope shall be provided instead of a chain cable, the following is to be observed:

8.1 The length of the wire rope is to be 1.5 times the required chain cable length. The wire rope is to have the same breaking load as the required chain cable of grade K1.

8.2 Between anchor and wire rope, a chain cable is to be fitted the length of which is 12.5 m. or equal to the distance between the anchor in stowed position and the windlass. The smaller value is to be taken.

8.3 A winch has to be provided which is to be designed in accordance with the requirements for windlasses.

9. Push barges not operating at the forward or aft end of pushed or towed units need not have any equipment.

10. Anchor equipment fitted in addition to that required by this Sub-Section (e.g. for positioning purposes) is not part of classification.

H. Additional Requirements for Ships with Service Notation "Pontoon Crane"

1 Lifting Appliances

1.1 Crane or derrick position during navigation

For ships with the service notation pontoon crane, the crane boom or the derrick structure is to be lowered and efficiently secured to the pontoon during the voyage.

2. Hull Girder Strength

For ships with the service notation pontoon crane having length greater than 65 m, the hull girder strength is to be checked when the lifting appliance, such as a crane or derrick, is operated, taking into account the various loading conditions considered, through criteria to be agreed with the **TL** on a case-by-case basis.

3. Hull Scantlings of Non Propelled Units with Service Notation "Pontoon Crane"

3.1 Loads transmitted by the lifting appliances

The forces and moments transmitted by the lifting appliances to the ship's structures, during both lifting service and navigation, are to be obtained by means of criteria to be considered by the **TL** on a case-by-case basis.

3.2 Ship's structures

The ship's structures, subjected to the forces transmitted by the lifting appliances, are to be reinforced to the **TL**'s satisfaction.

3.3 Lifting appliances

The check of the behaviour of the lifting appliances at sea is outside the scope of the classification and is under the responsibility of the Designer. However, where the requirements in item 1.1 may not be complied with (i.e. sailing with boom or derrick up) or where, exceptionally, trips with suspended load are envisaged, the Designer is to submit the check of the lifting appliances during navigation to the **TL** for information.

The **TL** may check these calculations following a specific request, while also reserving the right to do so, when deemed necessary, without any such request.

SECTION 34

DREDGERS

A. General

1. Application

1.1 The requirements in this section apply to vessels specially intended for dredging. The definitions for dredgers and dredging are given in item 4.

1.2 Vessels dealt with in this Section are to comply with the requirements of Sections 1÷ 21 and additionally with the requirements of this Section.

2. Class Notation

Vessels built in accordance with the requirements of this Section are to be assigned the class notation **"DREDGER"** or **"HOPPER BARGE" .**

3. Documentation

In addition to the documents listed in Section 1÷21, the following documents are to be submitted for approval:

- Arrangement plan for dredging equipment and installation,
- Plans showing supporting structures and strengthenings,
- Longitudinal strength calculations of the most severe loading conditions for vessels of 100 m in length and over.

4. Definitions

4.1 Dredger is a self-propelled vessel capable of loading dredging at sea and fitted with bottom doors or similar means for discharging or dumping the dredging to sea. Dredgings are generally self-loaded, and are carried in one or more integral hoppers to the place of discharge.

Similar units such as (non-self propelled) hopper barges which are capable of discharging their cargo in a quick and efficient manner, may be treated as dredgers.

4.2 Dredgings are materials consisting of soil, sand, gravel, or rock with a bulk density up to 2200 kg/m^3.

4.3 Cargo means dredging and entrained water.

B. Stability

1. Intact Stability

The intact stability of the vessel is to be sufficient to comply with the criteria indicated in 1.3 for each of the loading conditions of 1.2 in accordance with the calculation method described in 1.1.

1.1 Calculation method

The calculation of the righting lever curves is to take into account:

- The change of trim due to heel
- In the case of an open hopper the inflow of seawater or outflow of liquid cargo and seawater over the spill-out edge of the hopper,
- The inflow of seawater through any overflow, spillway or freeing port, either at the lower edge of the opening or at the cargo/seawater interface, whichever is the lower,

1.2 Loading conditions

The following loading conditions should be assumed for the calculations of intact stability.

1.2.1 State of cargo: liquid

The calculations are to be carried out for each of the loading conditions 1.2.1.1 and 1.2.1.2 considering:

The ship loaded to the dredging load line,

- The cargo as a liquid.

1.2.1.1 The hopper(s) fully loaded with a homogeneous cargo of density ρ_m up to the spill-out edge of the hopper.

$$\rho_m = M_1/V_1$$

M_1 = Mass of cargo in the hopper when loaded at the dredging load line [kg],

V_1 = Volume of the hopper at the spill-out edge of the hopper [m^3].

The stability calculations are made for the conditions of stores and fuel equal to 100%, 10% and an intermediate condition if such a condition is more critical than both 100% and 10%.

1.2.1.2 The hopper(s) filled or partly filled with a homogeneous cargo of densities equal to 1000, 1200, 1400, 1600, 1800, 2000 kg/m^3

When the dredging load line cannot be reached due to the density of the cargo, the hopper is to be considered filled up to the spill-out edge of the hopper.

The stability calculations are made for the condition of store and fuel that is most critical to meet the stability criteria in the stability calculations for density ρ_m as described in 1.2.1.1.

1.2.2 State of cargo: solid

The calculations are to be carried out for each of the loading conditions 1.2.2.1 and 1.2.2.2 considering:

- The ship loaded to the dredging load line
- The cargo as solid.

1.2.2.1 The hopper(s) fully loaded with a homogeneous cargo of density ρ_m up to the spill-out edge of the hopper, as calculated in 1.2.1.1.

The stability calculations are made for the conditions of stores and fuel equal to 100%, 10% and an intermediate condition if such a condition is more critical than both 100% and 10%.

1.2.2.2 The hopper(s) filled or partly filled with a homogeneous cargo of densities equal to 1400, 1600, 1800, 2000, 2200 kg/m^3 which are greater than ρ_m.

The stability calculations are made for the condition of store and fuel that is most critical to meet the stability criteria in the stability calculations for density ρ_m as described in 1.2.2.1.

1.2.2.3 For dredgers with bottom doors or similar means at port side and at starboard side, an additional calculation is to be made for asymmetric discharging as described below:

The dredger is assumed to be loaded to the dredging load line with solid cargo of a density equal to 1900 kg/m^3 ; when discharging, 20% of the total hopper load is assumed to be discharging only at one side of the longitudinal centre line of the hopper, horizontally equally distributed at the discharging side.
In this situation:

- The angle of equilibrium should not exceed 25º,
- The righting lever GZ within the 30º range beyond the angle of equilibrium should be at least 0,10 m.,
- The range of stability should not be less than 30º.

1.2.3 No cargo

Stability calculations are to be carried out for the hopper(s) with no cargo, the bottom dumping system being open to sea, and with stores and fuel at each of 100%, 10% and an intermediate condition if such a condition is more critical than both 100% and 10%.

For split hopper dredgers, an additional stability calculation is to be made in split hull configuration, with stores and fuel at each of 100%, 10% and an intermediate condition if such a condition is more critical than both 100% and 10%.

1.3 Intact Stability Criteria

The dredger is to meet the following intact stability criteria in the conditions of loading (excepting asymmetric discharge) stipulated in 1.2:

- The area under the righting lever curve is not to be less than 0.07 m.rad up to an angle of 15º when the maximum righting lever GZ_{max} occurs at 15º and 0.055 m.rad up to an angle

of 30º when the maximum righting lever GZ_{max} occurs at 30º or above;

- Where the maximum righting lever GZ_{max} occurs at angles of between 15º and 30º, the corresponding area under the righting lever curve is to be 0.055+0.001 (30º- θ_{max}*) m.rad;

- The area under the righting lever curve between the angles of heel of 30º and 40º, or between 30º and θ_f**, if this angle is less than 40º, is to be not less than 0.03 m.rad;

- The righting lever GZ is to be at least 0.20 m at an angle of heel equal to or greater than 30º;

- The maximum righting lever GZ_{max} is to occur at an angle of heel not less than 15º; and

- The initial metacentric height GM_0 as corrected for the free surface effect of tanks and hopper(s) containing liquids, is not to be less than 0.15 m.

1.4 Weather criterion

The dredger is to comply with the weather criterion of the IMO Code on Intact Stability A.749(18) (Chapter 3.2) at the summer load line taking into account the following loading condition:

- State of the cargo: liquid,

- Stores and fuel : 10%,

- Hopper(s) loaded with a homogeneous cargo up to the spill-out edge of the hopper where the density of such cargo equals or exceeds 1000 kg/m^3 ; where this condition implies a lighter cargo than 1000 kg/m^3 the hopper is considered to be partially filled with a cargo of density equal to 1000 kg/m^3.

---

* *θ_{max} is the angle of heel [º], at which the righting lever curve reaches its maximum.*

** *θ_f is the angle of heel [º], at which openings in the hull, superstructure or deckhouses which cannot be closed weathertight immerse. In applying this criterion, small openings through which progressive flooding cannot take place need not be considered as open.*

In addition to the weather criterion requirement at the summer load line, the dredger is to comply with the weather criterion of the IMO Code on Intact Stability A.749(18) (Chapter 3.2) at the dredging load line, assuming a reduced wind pressure of P=270 N/mm^2.

C. Longitudinal Strength

1. General

1.1 Longitudinal strength calculations of the most unfavourable loading conditions for ships of 100 m. in length and over are to be carried out.

For ships of less than 100 m. in length of unusual design and with unusual load distribution, longitudinal strength calculations may be required.

1.2 For dredgers, the longitudinal strength requirements as per Section 6 apply in general.

For dredgers classed for restricted service areas, dispensations may be approved.

2. Calculation Details

When calculating the midship section moduli in accordance with Section 6, the net cross sectional area of all continuous longitudinal strength members of a longitudinal through box keel fitted between the port and starboard side hopper doors may be taken into account.

D. Structural Design Principles

1. General

1.1 The thickness of main structural members which are particularly exposed to abrasion by a mixture of spoil and water are to be adequately strengthened

Upon approval by **TL** such members may alternatively be constructed of special abrasion resistant materials.

1.2 Where dredgers are intended to work in association with hopper barges, the sheerstrake is to be protected by a fender efficiently secured to the shell plating.

1.3 Where dredgers are intended to work in

association with hopper barges, the shell plating is to be protected by a fender extending from the load waterline to the lowest waterline.

1.4 On dredgers with closed hopper spaces suitable structural measures are to be taken in order to prevent accumulation of inflammable gas-air mixture in the hopper vapour space.

2. Shell Plating

2.1 The thickness of the bottom shell plating of dredgers intended or expected to operate while aground, is to be increased by 3 mm.

2.2 In ships having transverse framed double bottom, floors are to be fitted at each frame with intercoastal longitudinal girders, the spacing of which is not to be greater than 2 m.

2.3 In ships having longitudinal framed double bottom, the floor spacing is not to exceed three frame spaces and the bottom girder spacing is not to exceed three longitudinal frame spaces.

2.4 Where hopper doors are fitted on the vessel's centerline or where there is a centerline well for dredging gear (bucket ladder, suction tube, etc.), a plate strake is to be fitted on each side of the well or door opening the width of which is not less than 50 % of the rule width of the flat keel and the thickness not less than that of the rule flat keel.

The same applies where the centerline box keel is located above the base line at such a distance that it cannot serve as a docking keel.

In this case, the bottom plating of the box keel need not be thicker than the rule bottom shell plating.

2.5 The corners of the openings in the bottom plating are to be rounded with the radius as large as possible.

3. Deck

At the ends of the hopper space continuity of strength is to be maintained by fitting strengthened corner plates. The corners are to be carried out in accordance with the requirements of Section 8.

4. Bottom Structure

4.1 Single bottom transversely framed

4.1.1 Floors, longitudinal girders, etc. below dredging machinery and pump seats are to be adequately designed for the additional loads.

4.1.2 Where floors are additionally stressed by the reactions of the pressure required for closing the hopper doors, their section modulus and their depth are to be increased accordingly.

4.1.3 Floors in line with the hopper lower cross members fitted between hopper doors are to be connected with the hopper side wall by brackets of approx. equal legs. The brackets are to be flanged or fitted with face bars and are to extend to the upper edge of the cross members.

4.2 Single bottom longitudinally framed

4.2.1 Where the centerline box keel cannot serve as a docking keel, brackets are to be fitted on either side of the center girder or at the longitudinal bulkheads of dredging wells and of hopper spaces. The brackets are to extend to the adjacent longitudinals and longitudinal stiffeners. Where the spacing of bottom transverses is less than 2,5 m, one bracket is to be fitted, for greater spacings, two brackets are to be fitted.

The thickness of the brackets is at least to be equal to the web thickness of the adjacent bottom transverses. They are to be flanged or fitted with face bars.

4.2.2 Where longitudinal bulkheads and the side shell are framed transversely, the brackets as per ~~2.3~~ 4.2.1 are to be fitted at every frame and are to extend to the bilge.

4.2.3 The bottom transverses are to be stiffened by means of flat bar stiffeners at every longitudinal. The depth shall approximately be equal to the depth of the bottom longitudinals, however, it need not exceed 150 mm.

4.3 Double bottom

4.3.1 Double bottoms need not be fitted adjacent to the hopper spaces.

4.3.2 In addition to the requirements for main class, plate floors are to be fitted in way of hopper spaces intended to be unloaded by means of grabs.

E. Hopper Construction

1. Scantlings

The scantlings of the boundaries of hopper spaces are to be determined as follows:

1.1 Plating

$$t = 1.21 \cdot a \cdot \sqrt{p \cdot k} + t_K \text{ , [mm]}$$

t_{min} = as per Section 28, I.

k, = Material factor

a, a_ℓ = Spacing of stiffeners in [m]

p = $10 \cdot \rho \cdot h \cdot (1 + a_v)$ [kN/m^2]

h = Distance of lower edge of plating or of the load center of the respective member to the upper edge of overflow in [m]

a_v = See Section 5.

ρ = Density of the spoil in [t/m^3]

ρ_{min} = 1.2 t/m^3.

t_K = Corrosion allowance acc. to Section 3.

1.2 Stiffeners

1.2.1 Transverse stiffeners of longitudinal bulkheads and stiffeners of transverse bulkheads:

$$W_y = k \cdot 0.6 \cdot a \cdot \ell^2 \cdot p \text{ [cm}^3\text{]}$$

1.2.2 Longitudinal stiffeners:

$$W_x = W_\ell$$

W_ℓ = See Section 8.
but not less than W_y.

1.3 The strength is not to be less than that of the ship's sides. Particular attention is to be paid to adequate scarphing at the ends of longitudinal bulkheads of hopper spaces.

The top and bottom strakes of the longitudinal bulkheads are to be extended through the end bulkheads, or else scarphing brackets are to be fitted in line with the walls in conjunction with strengthenings at deck and bottom.

2. Constructional Details

2.1 In hoppers fitted with hopper doors, transverse girders are to be fitted between the doors the spacing of which shall normally not exceed 3,6 m.

2.2 The depth of the transverse girders spaced in accordance with 2.1 shall not be less than 2,5 times the depth of floors as per Section 8. The web plate thickness is not to be less than the thickness of the side shell plating. The top and bottom edges of the transverse girders are to be fitted with face plates. The thickness of the face plates is to be at least 50 % greater than the rules web thickness.

Where the transverse girders are constructed as watertight box girders, the scantlings are not to be less than required in accordance with 1. At the upper edge, a plate strengthened by at least 50 % is to be fitted.

2.3 Vertical stiffeners spaced not more than 900 mm. apart are to be fitted at the transverse girders.

2.4 The transverse bulkheads at the ends of the hoppers are to extend from board to board.

2.5 Regardless of whether the longitudinal or the transverse framing system is adopted, web frames in accordance with Section 12, are to be fitted in line with the transverse girders as per 2.1. The density of the spoil is to be considered when determining the scantlings.

2.6 Strong beams are to be fitted transversely at deck level in line with the web frames as per 2.5. The scantlings are to be determined, for the actual loads complying with an equivalent stress of σ_v = 150/k [N/mm^2] The maximum reactions of hydraulically operated rams for hopper door operation are, for instance, to be taken as actual load

The strong beams are to be supported by means of pillars as per Section 8, at the box keel, if fitted.

2.7 On bucket dredgers, the ladder wells are to be isolated by transverse and longitudinal cofferdams at the bottom, of such size as to prevent the adjacent compartments from being flooded in case of any damage to the shell by dredging equipment and dredged objects. The cofferdams are to be accessible.

F. Self-Unloading Barges

1. Self-unloading barges covered by this Sub-Section are split hopper barges the port and starboard portions of which are hinged at the hopper end bulkheads to facilitate rotation around the longitudinal axis when the bottom is to be opened.

2. Longitudinal strength calculations are to be carried out for self-unloading barges, irrespective of their length, for the unloading condition. The bending moments and the stresses related to the inertia axis y'-y' and z'-z' are to be determined according to the following formula:

$$\sigma = \frac{M_{y'} \cdot e_{z'}}{I_{y'}} + \frac{M_{z'} \cdot e_{y'}}{I_{z'}}$$

$M_{y'}$, $M_{z'}$ = Bending moment related to the inertia axis y'-y' and z'-z' respectively.

$I_{y'}$, $I_{z'}$ = Moments of inertia of the cross section shown in Fig. 34.1 related to the respective inertia axis.

$e_{y'}$, $e_{z'}$ = The greater distance from the neutral axis y'-y' and z'-z' respectively.

The still water bending moments are to be determined for the most unfavourable distribution of cargo and consumables. The vertical still water and wave bending moments are to be determined in accordance with Section 6.

The horizontal still water bending moment within the hold length is to be calculated on the basis of the horizontal pressure difference between external hydrostatic pressure and cargo pressure in still water.

The following portion of the dynamic moment is to be added to the horizontal still water moment:

$$M_Z = \frac{\ell^2}{24}\left[10 \cdot \mathbf{T}^2 - \frac{\left(10\mathbf{T} - p_{WB}\right)^2}{10\mathbf{T} + p_{WB}} \cdot \mathbf{T}\right]$$

P_{WB} = See Section 5, with f =1.

ℓ = Spacing between hinges in [m].

The stresses are not to exceed the following values:

- In still water:

$\sigma_{sw} = 15 \cdot \sqrt{L} / k$ max. 150/k [N/mm^2]

- In the seaway:

σ_p = 175/k N/mm^2

TL may approve reduced vertical wave bending moments if the vessel is intended for dumping within specified service ranges or in sheltered waters only.

3. The bearing seating and all other members of the hinge are to be so designed as not to exceed the following permissible stress values when loading as per Fig. 34.1.:

σ_b = 90/k N/mm^2

τ = 55/k N/mm^2.

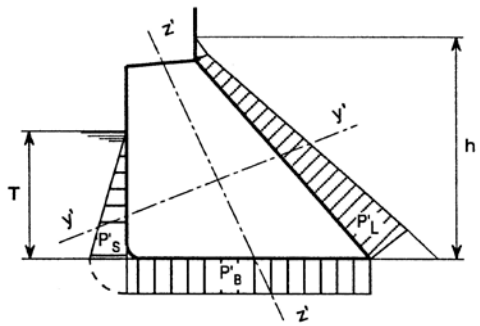

p'_S and p_B = Water pressure in [kN/m^2] at the draught **T**

p'_L = Cargo pressure in [kN/m^2] as per the following formula:

$p'_L = 10 \cdot \rho \cdot h$ [kN/m^2]

ρ and h , see E.1.1.

Figure 34.1 Static loads on a self-unloading barge, loaded

G. Equipment

1. The equipment of anchors, chain cables, wires and recommended ropes for dredgers for unrestricted service range having normal ship shape of the underwater part of the hull is to be determined in accordance with Section 17. When calculating the Equipment Number according to Section 17, bucket ladders and gallows need not to be included. For dredgers of unusual design of the underwater part of the hull, the determination of the equipment requires special consideration.

The equipment of dredgers for restricted range of service is to be determined as for vessels in coastal service or harbour service.

2. The equipment of non-self-propelled dredgers is to be determined as for barges, in accordance with Section 33.

SECTION 35

FLOATING DOCKS

A. General

1. Application

1.1 The requirements in this section apply to floating docks specially designed to operate in a harbor or sheltered waters where there is no significant movement of the vessel due to wave action. The definitions for floating docks are given in item 4.

1.2 When the dry dock is to be operated or towed in other than harbor or sheltered waters, special consideration is to be given to the longitudinal strength, reinforcement against slamming and other items as deemed necessary.

2. Class Notation

Vessels built in accordance with the requirements of this Section are to be assigned the class notation **"FLOATING DOCK".** Notation indicating the lifting capacity in [t] also will be shown in the record.

3. Documentation

The following documents are to be submitted for approval:

- General arrangement plan,
- Longitudinal and transverse sections,
- Structural plans of the wing walls and pontoons,
- Structural plans of the decks and bulkheads,
- Tank arrangement plan,
- Calculations and data for longitudinal strength analysis,
- Admissible loads and deflections,
- Pumping arrangement,
- Machinery and electric plans,
- Piping systems,
- Plans of fire protection and extinguishing systems,
- Stability calculations.

4. Definitions

4.1 Length

Length of the dock is the moulded length between the end bulkheads of the lifting portion of the floating dock in its normal operation mode.

4.2 Breadth

The breadth is the moulded breadth between the outer surfaces of the outer side plating of the wing walls.

4.3 Depth

The depth is the moulded depth measured at the centerline from the inner surface of the bottom plating to the inner surface of the top deck plating.

4.4 Clear Draft

The distance between the waterline when the dock is immersed and the top of the keel blocks.

4.5 Top Deck

The top deck is the uppermost continuous watertight deck extending over the length of the wing walls.

4.6 Safety Deck

The safety deck is a watertight deck extending over the length of the wing walls and located below the top deck.

4.7 Residual Water

Residual water is water which cannot be discharged by pumps from ballast compartments.

4.8 Ballast Water

Ballast water is the water, other than residual water, used in ballast compartments.

4.9 Lifting Capacity

The lifting capacities of a floating dock are to be with all service tanks full and operating equipment in place. In determining the lifting capacities, account is to be taken of the residual water or any ballast water required for longitudinal purposes.

B. Material

The material for the structural members of floating docks having operating sites in harbors or sheltered waters is to be hull structural steel complying with the relevant requirements of **TL** Material Rules Chapter 2. Steel plates and profiles are generally to be of A grade material. For floating docks that are to operate in low temperature environments attention is to be given to the notch toughness of the material.

C. Longitudinal Strength

1. Loading Conditions

1.1 The longitudinal strength is to be determined from the data given for a ship having a weight equal to the maximum lifting capacity of the floating dock.

Longitudinal bending moments and shear forces are to be investigated for the condition in which the weight of the vessel is distributed over a length corresponding to the shortest vessel intended to be lifted and supported at the maximum lifting capacity of the floating dock. Where higher bending moments and shear forces may occur at less than the maximum lifting capacity, such conditions are also to be investigated.

1.2 Information on the loading conditions is to be contained in the operating manual, including the length of the shortest vessel used to determine the bending moment and shear forces at the maximum lifting capacity. Information on the shortest vessel that may be docked at the various other lifting capacities is also to be indicated in the operating manual as well as the longitudinal deflections of the floating dock associated with the maximum allowable bending moment for which the dock is approved.

1.3 Alternatively, consideration will be given to the approval of the floating dock based on allowable operating deflections that have been established from satisfactory service with floating docks of specific size, proportion and scantlings. For approval, the proposed maximum allowable values of deflection along the length of the floating dock and the longitudinal bending moments and shear forces associated with them are to be submitted.

1.4 Special consideration will be given to the longitudinal strength where it is intended to tow the floating dock in unprotected waters, including particulars of the season and the duration and area of the towing operation.

2. Permissible Stresses

2.1 For the loading conditions stated in 1, the longitudinal bending stresses are not to exceed 140 N/mm^2 and the shear stresses are not to exceed 80 N/mm^2.

2.2 Alternatively, the design stresses may be in accordance with other recognized standards, provided all related requirements of the standard are also complied with.

2.3 Where approval is based upon allowable deflection standards established by satisfactory service experience, the associated permissible stresses may vary from those given above.

D. Transverse Strength

1. Loading Conditions

1.1 The transverse strength of the floating dock is to be considered with the floating dock at the minimum pontoon freeboard and the keel blocks loaded to the maximum permissible value per m of length of the floating dock indicated in the building specifications or operating manual. The maximum permissible keel block load is to be not less than determined from the data given for the shortest ship intended to be docked at the maximum lifting capacity of the floating dock with the vessel weight supported only by the keel blocks.

1.2 Alternatively, where it is the operating condition, the weight corresponding to the shortest vessel to be docked at the maximum lifting capacity may be distributed on both the keel and side blocks. In such cases, the keel block load is also not to be less than that corresponding to the shortest heaviest vessel to be supported only by the keel blocks, and the transverse strength of the dock is to be considered for both conditions. With the floating dock at the minimum pontoon freeboard, consideration is to be given also to the effect on the transverse strength of the pontoon structure not subjected to block loading. The maximum keel block load and the side block design loads need not to be considered to apply simultaneously to a member supporting both unless it is anticipated as an operational loading arrangements.

1.3 The transverse strength of the floating dock is also to be considered with the floating dock at those drafts which give the maximum water pressure differential on the floating dock structure.

2. Permissible Stresses

2.1 Under the loading conditions in 1, the compressive or tensile stresses in transverse members are not to exceed 160 N/mm^2. The shear stresses in the transverse members are not to exceed 100 N/mm^2.

2.2 Alternatively, the design stresses may be in accordance with other recognized standards, provided all related requirements of the standard are also complied with.

E. Local Strength

1. Shell Plating and Tank Bulkheads

1.1 Plating

The thickness of shell plating and tank bulkhead is not to be less than determined from the following equation:

$$t = 3.65 \cdot a \cdot \sqrt{h \cdot k} + t_K \quad [mm]$$

where;

a = Spacing of stiffeners [m]

h = For ballast tanks, the greatest of the following distances from the lower edge of the plate [m]:

- to a point located at two-thirds of the distance from the top of the tank to the top of the overflow. As an alternative, the maximum differential head in service may be used, provided hydrostatic data is submitted to show the differential head based on the highest levels to which water will rise on each side of the structure in service. Where the head is obtained using the maximum differential head in service, data on operating the floating dock within such design limits are to be included in the operating manual.
- 2.5 m.

= For all other tanks, the greatest of the following distances from the lower edge of the plate [m]:

- To a point located two-thirds of the distance from the top of the tank to the top of the overflow
- To the maximum immersion waterline, for wing wall and pontoon plating
- 2.5 m.

= For void spaces and cofferdams, the greatest of the following distances from the lower edge of the plate [m]:

- To the maximum immersion waterline, for wing wall and pontoon plating
- 2.5 m.

The thickness is not to be less than 7.0 mm. Special consideration is to be given to the required plating thickness where it forms the boundary of an air cushion.

1.2 Primary Supporting Members

Each stringer, web frame or girder which supports secondary supporting members is to have a section

modulus not less than obtained from the following equation:

$$W = 6.8 \cdot a \cdot h \cdot \ell^2 \cdot k \quad [cm^3]$$

where:

a = Spacing of stringers, web frames or girders [m]

h = Vertical distance from the center of the area supported to the same height to which h for the stiffeners is measured [m], see 1.1 above.

ℓ = Span between effective supporting members [m].

k = Material factor according to Section 3, B.2.1.;

Where one or both ends are simply supported, the section moduli are to be increased by 50 per cent.

1.3 Secondary Supporting Members

Each stiffener, in association with the plating to which it is attached, is to have section modulus not less than obtained from the following equation:

$$W = 6.8 \cdot a \cdot h \cdot \ell^2 \cdot k \quad [cm^3]$$

where;

a = Spacing of stiffeners [m]

h = For ballast tanks, the greatest of the following distances from the middle of ℓ [m]:

- To a point located at two-thirds of the distance from the top of the tank to the top of the overflow. As an alternative, the maximum differential head in service may be used, provided hydrostatic data is submitted to show the differential head based on the highest levels to which water will rise on each side of the structure in service. Where the head is obtained using the maximum differential head in service, data on operating the floating dock within such design limits are to be included in the operating manual.
- 2.5 m.

= For all other tanks, the greatest of the following distances from the middle of ℓ [m]:

- To a point located two-thirds of the distance from the top of the tank to the top of the overflow
- To the maximum immersion waterline, for wing wall and pontoon plating
- 2.5 m.

= For void spaces, the distance from the middle of ℓ to the maximum immersion waterline for wing wall and pontoon stiffeners, but not less than 2.5 m for wing wall, pontoon and bulkhead stiffeners [m]:

ℓ = Span between effective supporting members [m].

k = Material factor according to Section 3, B.2.1.;

Special consideration is to be given to the scantlings of stiffeners supporting plating which forms the boundary of an air cushion.

2. Decks

2.1 Top Deck

2.1.1 Plating

The thickness of top deck plating over the 0.4 mid-length of the floating dock is to be as required for longitudinal strength stated in C. Outside the 0.4 mid-length the plate thickness may be gradually reduced to the following value on the each end of the floating dock:

$$t = 0.01 \cdot a + 0.55 \text{ [mm]}$$

where;

t = Required plate thickness on ends [mm],

a = Spacing of longitudinal or transverse beams [mm].

2.1.2 Primary supporting members

The section modulus of each top deck member supporting longitudinals or beams is to be not less than obtained from the following equation:

$$W = 4.85 \cdot a \cdot h \cdot \ell^2 \cdot k \quad [cm^3]$$

where;

a = Spacing of primary supporting members [m]

h = Height from the top of the safety deck to the underside of the top deck plating [m]

ℓ, k = See, 1.2

Special consideration is to be given to the scantlings of primary supporting members where the deck forms the boundary of an air cushion.

2.1.3 Secondary supporting members

In general, the top deck is to be longitudinally framed. The section modulus of each top deck longitudinal or transverse beam is to be not less than obtained from the following equation:

$$W = 12 \cdot a \cdot \ell^2 \cdot c \cdot k \quad [cm^3]$$

where;

a = Spacing of secondary supporting members [m],

ℓ, k = See, 1.2,

c = 0.85 for longitudinal,

= 0.55 for transverse beams.

2.2 Safety Deck

2.2.1 Plating

The thickness of the safety deck is to be in accordance with 1.1, but is generally to be not less than 7.0 mm. Special consideration is to be given to the thickness where the deck forms an air cushion boundary.

2.2.2 Primary supporting members

See, 2.1.2.

2.1.3 Secondary supporting members

The section modulus of each safety deck longitudinal or transverse beam is to be not less than obtained from the following equation:

$$W = 4.25 \cdot a \cdot h \cdot \ell^2 \cdot k \quad [cm^3]$$

where;

a = Spacing of secondary supporting members [m],

h = Height from the top of the safety deck to the underside of the top deck plating [m],

ℓ, k = See, 1.2.

3. Strengthening of Substructure Under the Keel and Side Blocks

3.1 The loading on the keel blocks is to be the maximum permissible value per m of floating dock length given in the building specifications or operating manual, but it is not to be less than determined from the data given for the shortest ship intended to be docked at the maximum lifting capacity of the floating dock with the vessel weight supported only by the keel blocks.

3.2 Alternatively, where it is the operating condition, the weight corresponding to the shortest vessel to be docked at the maximum lifting capacity may be distributed on both the keel and side blocks. In such cases, the keel and side blocks load is also not to be less than that corresponding to the shortest, heaviest vessel to be supported only by the keel blocks. In the absence of other standards or specifications, the side block design load is not to be less than one-half that of the keel blocks. The maximum keel block load and the design side block loads need not be applied simultaneously to a member supporting both, unless it is anticipated as an operational loading condition.

3.3 A centerline girder is to be provided to provide adequate support for the keel blocks. Side girders or transverse members are to be arranged to support the side blocks.

3.4 Under the local loading stated in 3.1 and 3.2, the tensile or compressive stress is not to exceed 160 N/mm^2. The shear stresses are not to exceed 100 N/mm^2.

Alternatively, the design stresses may be in accordance with other recognized standards, provided all related requirements of the standard are also complied with.

4. Dock Cranes

If fitted, the resulting loads of dock cranes on the floating dock structure are to be indicated on the plans submitted for approval. The total weight of cranes, the maximum wheel loads and the arrangement of wheels and rails are to be taken into account for dimensioning of the crane foundations.
Certification of the cranes is not part of classification.

F. Stability

1. General

Transverse stability calculations for the floating dock in the most unfavorable conditions are to be submitted. The conditions to be considered are to include that of the floating dock loaded, with the top of the keel blocks breaking water, with the top of the pontoon at water level and other conditions that may be critical from initial ship touchdown to normal operating conditions. Longitudinal stability is also to be considered.

2. Transverse Stability

In general, the transverse GM of the combined ship and floating dock unit, after all free surface correction are made for spaces in the floating dock, is not to be less than 1.0 m.

The operating manual for the floating dock is to include data giving a range of ship weights and the associated ship centers of gravity that would result in the floating dock complying with the foregoing stability standards. In general, the foregoing transverse GM value is minimum. However, depending on the operational environment, it may be required to increase this value.

3. Freeboard

3.1 The following freeboards are to be considered as being sufficient for floating docks operating in sheltered waters. Where the operating site is not in sheltered waters, the freeboards are to be specially considered.

3.2 When the floating deck is submerged to its maximum draft, the wing wall freeboard is the least distance from the upper surface of the top deck to the waterline and is generally to be not less than 1.0 m, provided the wing walls are watertight to the top deck.

3.3 When the floating dock is supporting a ship of weight equal to the rated lifting capacity of the floating dock, the rated pontoon freeboard is the least distance from the waterline to the upper surface of the pontoon top plating.

The rated pontoon freeboard is to be not less than 300 mm.

3.4 When the floating dock is supporting a ship of weight equal to the maximum lifting capacity of the floating dock, the minimum pontoon freeboard is the least distance from the waterline to the upper surface of the pontoon top plating.

The minimum pontoon freeboard is to be not less than 75 mm.

G. Testing During and After Construction

1. Tank Tests

All tanks, except those used for ballast, and cofferdams are to be separately tested by a head of water to the highest point to which the liquid will rise in service. Where the scantlings of a tank boundary are based on the maximum differential head in service, care is to be taken so that test heads do not exceed the design differential head. Ballast compartments are to be hose tested. The tests are to be carried out under simultaneous inspection of both sides of the plating. The water pressure in the hose is not to be less than 2.11 kg/cm^2.

Air testing may be considered as an alternative to the foregoing.

2. Immersion Test

Immersion test is to be carried out on completion of the floating dock to determine the floating dock lightweight. The density of water in which the tests are made is to be noted.

3. Inclining Experiment

On completion of construction, the floating dock is to be inclined to determine the vertical center of gravity. Alternatively, consideration may be given to determining the vertical center of gravity of the floating dock by calculation.

SECTION 36

GOAL-BASED SHIP CONSTRUCTION STANDARDS FOR BULK CARRIERS AND OIL TANKERS

A. General

1. Application

1.1 This section provides requirements for tankers and bulk carriers subject to SOLAS Chapter II-1 Part A-1 Regulation 3-10, *Goal-based ship construction standards for bulk carriers and oil tankers*.

1.2 Reference is made to IACS UR Z23, *Hull Survey for New Construction, Appendix 2*.

B. Examination and Test Plan for Newbuilding Activities

1. Requirements

1.1.1 The shipbuilder shall provide plans of the items which are intended to be examined and tested in accordance with the TL's rules in the quality survey plan (QSP), taking into account the ship type and design. This QSP shall be reviewed at the time of the kick off meeting, and must include:

1.1.2 A set of requirements, including specifying the extent and scope of the construction survey(s) and identifying areas that need special attention during the survey(s), to ensure compliance of construction with mandatory ship construction standards including:

- Types of surveys (visual, non-destructive examination, etc.) depending on location, materials, welding, casting, coatings, etc.
- Establishment of a construction survey schedule for all assembly stages from the kick-off meeting, through all major construction phases, up to delivery
- Quality survey plan, including provisions for critical areas identified during design approval
- Criteria for acceptance
- Interaction with shipyard, including notification and documentation of survey results
- Correction procedures to remedy construction defects
- List of items that would require scheduling or formal surveys
- Determination and documentation of areas that need special attention throughout ship's life, including criteria used in making the determination.

1.1.3 A description of the requirements for all types of testing during survey, including test criteria.

C. Design Transparency

1. General

For ships subject to compliance with IMO Res. MSC.287(87), IMO Res. MSC.290(87), IMO Res. MSC.296(87) and IMO MSC.1/Circ.1343, readily available documentation is to include the main goal-based parameters and all relevant design parameters that may limit the operation of the ship

D. Ship Construction File

1. Content of Ship Construction File

A ship construction file (SCF) with specific information on how the functional requirements of the goal- based ship construction standards for bulk carriers and oil tankers have been applied in the ship design and construction is to be provided upon delivery of a new ship, and kept on board the ship and/or ashore and updated as appropriate throughout the ship's service. The contents of the SCF are to conform to the requirements below.

1.1 The following design specific information is to be included in SCF:

- Areas requiring special attention throughout the ship's life (including critical structural areas)
- All design parameters limiting the operation of a ship
- Any alternatives to the rules, including structural details and equivalency calculations

- "As built" drawings and information which are verified to incorporate all alterations approved by the recognized organization or flag State during the construction process including scantling details, material details, location of butts and seams, cross section details and locations of all partial and full penetration welds

- Net (renewal) scantlings for all the structural constituent parts, as built scantlings and voluntary addition thicknesses

- Minimum hull girder section modulus along the length of the ship which has to be maintained throughout the ship's life, including cross section details such as the value of the area of the deck zone and bottom zone, the renewal value for the neutral axis zone

- A listing of materials used for the construction of the hull structure, and provisions for documenting changes to any of the above during the ship's service life

- Copies of certificates of forgings and castings welded into the hull (Ref. IACS UR W7 and UR W8)

- Details of equipment forming part of the watertight and weather tight integrity of the ship

- Tank testing plan including details of the test requirements (Ref. IACS UR S14)

- Details for the bottom survey afloat, when applicable, information for divers, clearances measurements instructions etc., tank and compartment boundaries

- Docking plan and details of all penetrations normally examined at dry docking

- Coating Technical File, for ships subject to compliance with the IMO Performance Standard for Protective Coatings (PSPC)

1.2 See Table 36.1 for details of information to be further included. This information has to be kept on board the ship and/or ashore and updated as appropriate throughout the ship's life in order to facilitate safe operation, maintenance, survey, repair and emergency measures.

1.3 It is to be noted that parts of the content of the SCF may be subject to various degrees of restricted access and that such documentation may be appropriately kept ashore.

1.4 The SCF has to include the list of documents constituting the SCF and all information listed in Table 36.1, which is required for a ship's safe operation, maintenance, survey, repair and in emergency situations. Details of specific information that is not considered to be critical to safety might be included directly or by reference to other documents.

1.5 When developing an SCF, all of the columns in Table 36.1 have to be reviewed to ensure that all necessary information has been provided.

1.5 It may be possible to provide information listed in Table 36.1 under more than one Tier II **(1)** functional requirement as a single item within the SCF, for example, the coating technical file required by the PSPC **(2)** is relevant for both coating life and survey during construction.

1.6 The SCF has to remain with the ship and, in addition, be available to its classification Society and flag state throughout the ship's life. Where information not considered necessary to be on board is stored ashore, procedures to access this information should be specified in the onboard SCF. The intellectual property provisions within the SCF should be duly complied with.

(1) *Tier II items means the functional requirements included in the International Goal-based Ship Construction Standards for Bulk Carriers and Oil Tankers (GBS), adopted by IMO Res. MSC 287(87)*

(2) *Performance standard for protective coatings for dedicated seawater ballast tanks in all types of ships and double-side skin spaces of bulk carriers, adopted by IMO Res. MSC 215(82), as amended and Performance standard for protective coatings for cargo oil tanks of crude oil tankers, adopted by IMO Res. MSC 288(87), as amended.*

1.7 The SCF should be updated throughout the ship's life at any major event, including, but not limited to, substantial repair and conversion, or any modification to the ship structure.

2. The SCF shall be reviewed **(3)**, at the time of new building, in accordance with the requirements of paragraphs 1.1 and 1.2 and the normal storage location shall be distinguished.

2.1 For the SCF stored on board ship, the surveyor is to verify that the information is placed on board the ship, upon completion of ship construction.

2.2 For the SCF stored on shore archive, the surveyor is to verify that the information is stored on shore archive by examining the list of information included on shore archive, upon completion of ship construction.

E. Determination of Number of Surveyor(s)

TL will assign adequate number of suitable qualified surveyor(s) for new building projects according to the construction progress of each ship to meet appropriate coverage of the examination and testing activities as agreed in the Survey Plan.

---

(3) *"Review" means the examination of the SCF that is carried out by the surveyor, at the end of the newbuilding process, in order to confirm that:*

- *drawings and documents required under the paragraph 3 of the appendix 2 to the UR Z23, plus*
- *the possible additional drawings/documents provided by the shipyard, as per the Ship Constructional File (SCF) list of drawings/documents*

are present in the copies of the SCF stored on board and in the ashore archive.

The "review" is not to be intended as an assessment of the drawings/documents in order to verify their compliances with the applicable Rules/Regulations.

Table 36.1 List of information to be included in the ship construction file

Tier II items		*Information to be included*	*Further explanation of the content*	*Example documents*	*Normal storage location*
DESIGN					
1	Design life	assumed design life in years	statement or note on midship section	SCF-specific	on board ship
				midship section plan	on board ship
2	Environmental conditions	assumed environmental conditions	- statement referencing data source or rule (specific rule and data) or - in accordance with rule (date and revision)	SCF-specific	on board ship
3	Structural strength				
3.1	General design	applied rule (date and revision)	applied design method alternative to rule and subject structure(s)	SCF-specific	on board ship
		applied alternative to rule		capacity plan	on board ship
3.2	Deformation and failure modes	calculating conditions and results	allowable loading pattern	loading manual	
		assumed loading conditions	maximum allowable hull girder bending moment and shear force	trim and stability booklet	on board ship
3.3	Ultimate strength	operational restrictions due to structural strength	maximum allowable cargo density or storage factor	loading instrument instruction manual	on board ship
				Operation and maintenance manuals	on board ship
				strength calculation	on board ship
3.4	Safety margins	strength calculation results	bulky output of strength calculation	areas prone to yielding and/or buckling	on board ship
		gross hull girder section modulus	plan showing highly stressed areas (e.g. critical structural areas) prone to yielding and/or buckling	general arrangement plan	on board ship
		minimum hull girder section modulus along the length of the ship to be maintained throughout the ship's life, including cross section details such as the value of the area of the deck zone and bottom zone, the renewal value for the neutral axis zone			
		gross scantlings of structural constituent parts	structural drawings	key construction plans	on board ship

Tier II items		***Information to be included***	***Further explanation of the content***	***Example documents***	***Normal storage location***
		net scantlings of structural constituent parts, as built scantlings and voluntary addition thicknesses	rudder and stern frame	rudder and rudder stock plans	
			structural details of typical members	structural details	on board ship
				yard plans	on shore archive
				dangerous area plan	on board ship
		hull form	hull form information indicated in key construction plans	lines plan or equivalent	on shore archive
			hull form data stored within an onboard computer necessary for trim and stability and longitudinal strength calculations		on shore archive
4	Fatigue life	applied rule (date and revision)	applied design method alternative to rule and subject structures	SCF-specific	on board ship
		applied alternative to rule			
		calculating conditions and results;	assumed loading conditions and rates	structural details	on board ship
		assumed loading conditions			
		fatigue life calculation results	bulky output of fatigue life calculation	fatigue life calculation	on shore archive
			plan showing areas (e.g. critical structural areas) prone to fatigue	areas prone to fatigue	on board ship
5	Residual strength	applied rule (date and revision)		SCF-specific	on board ship
6	Protection against corrosion				
6.1	Coating life	coated areas and target coating life and other measures for corrosion protection in holds, cargo and ballast tanks, other structure- integrated deep tanks and void spaces	plans showing areas (e.g. critical structural areas) prone to excessive corrosion	SCF-specific	on board ship
				Coating technical file required by PSPC (Performance standard for protective coatings for dedicated seawater ballast tanks in all types of ships and double-side skin spaces of bulk carriers, adopted by IMO Resolution MSC.215(82), as amended and Performance standard for protective coatings for cargo oil tanks of crude oil tankers, adopted by IMO Resolution MSC.288(87),	on board ship

Tier II items		*Information to be included*	*Further explanation of the content*	*Example documents*	*Normal storage location*
				as amended)	
6.2	Corrosion *addition*	specification for coating and other measures for corrosion protection in holds, cargo and ballast tanks, other structure-integrated deep tanks and void spaces		areas prone to excessive *corrosion*	on board ship
		gross scantlings of structural constituent parts		key *construction plans*	on board ship
		net scantlings of structural constituent parts, as built scantlings and volunt*ary addition thicknesses*			
7	Structural redundancy	applied rule (date and revision)		SCF-specific	on board ship
8	Watertight and weathertight integrity	applied rule (date and revision)		SCF-specific	on board ship
		key factors for watertight and weathertight integrity	details of equipment forming part of the watertight and weathertight integrity	structural details of hatch covers, doors and other closings integral with the shell and bulkheads	on board ship
9	Human element considerations	list of ergonomic design principles applied to ship structure design to enhance safety during operations, inspections and maintenance of ship		SCF-specific	on board ship
10	Design transparency	- applied rule (date and revision) - applicable industry standards for design transparency and IP protection		intellectual property provisions	on board ship
		reference to part of SCF information kept ashore		summary, location and access procedure for part of SCF information on shore	on board ship
CONSTRUCTION					
11	Construction quality procedures	applied construction quality standard	Recognized national or international construction quality standard	SCF-specific	on board ship
12	Survey during construction	survey regime applied during construction (to include all owner and class scheduled inspections during construction)	applied rules (date and revision)	SCF-specific	on board ship
			copies of certificates of forgings and castings welded into the hull	tank testing plan	on board ship
				non-destructive testing	on board

Tier II items		***Information to be included***	***Further explanation of the content***	***Example documents***	***Normal storage location***
		examination		plan	ship
				Coating Technical File required by PSPC	on board ship
IN-SERVICE CONSIDERATIONS					
13	Survey and maintenance	maintenance plans specific to the structure of the ship where higher attention is called for	plan showing highly stressed areas (e.g. critical structural areas) prone to yielding, buckling, fatigue and/or excessive corrosion	SCF-specific	on board ship
				operation and maintenance manuals (e.g. hatch covers and doors)	on board ship
		preparations for survey	Arrangement and details of all penetrations normally examined at dry-docking	docking plan	on board ship
		minimum hull girder section modulus along the length of the ship to be maintained throughout the ship's life, including cross section details such as the value of the area of the deck zone and bottom zone, the renewal value for the neutral axis zone	details for in-water survey	Ship Structure Access Manual	on board ship
				Means of access to other structure-integrated deep tanks	on board ship
				Coating Technical File required by PSPC	on board ship
		gross scantlings of structural constituent parts		key construction plans	on board ship
		net scantlings of structural constituent parts, as built scantlings and voluntary addition thicknesses hull form		structural details	on board ship
				yard plans	on shore archive
				lines plan or equivalent	on shore archive
			hull form information indicated in key construction plans		on board ship
14	Structural accessibility	means of access to holds, cargo and ballast tanks and other structure-integrated deep tanks	plans showing arrangement and details of means of access	Ship structure access manual	on board ship
				means of access to other structure-integrated deep tanks	on board ship
RECYCLING CONSIDERATIONS					
15	Recycling	identification of all materials that were used in construction and may need special handling due to environmental and safety concerns	list of materials used for the construction of the hull structure	SCF-specific	on board ship

Tier II items		Information to be included	Further explanation of the content	Example documents	Normal storage location

Note:

(1) ***SCF-specific means*** *documents to be developed especially to meet the requirements of GBS guidelines (acc. to MSC.1/Circ.1343)*

(2) ***Key construction plans*** *means plans such as midship section, main O.T. and W.T. transverse bulkheads, construction profiles/plans, shell expansions, forward and aft sections in cargo tank (or hold) region, engine-room construction, forward construction and stern construction drawings*

(3) ***Yard plans means*** *a full set of structural drawings, which include scantling information of all structural members*

(4) ***Hull form*** *means a graphical or numerical representation of the geometry of the hull. Examples would include the graphical description provided by a lines plan and the numerical description provided by the hull form data stored within an onboard computer.*

(5) ***Lines plan*** *means a special drawing which is dedicated to show the entire hull form of a ship.*

(6) ***Equivalent (to Lines plan)*** *means a set of information of hull form to be indicated in key construction plans for SCF purposes. Sufficient information should be included in the drawings to provide the geometric definition to facilitate the repair of any part of the hull structure*

(7) ***Normal storage location*** *means a standard location where eachSCF information item should be stored. However, those items listed as being on board in the table above should be on board as a minimum to ensure that they are transferred with the ship on a change of owner*

(8) *Shore archive is to be operated in accordance with applicable international standards.*

ANNEX

MOMENTS OF INERTIA AND SECTION MODULI, LOAD LINE MARK, ICE CLASS DRAUGHT MARKING

1. Moduli of Sections

The section moduli of frames, beams, stiffeners and other parts made of sections as given in the Rules are valid for sections in conjuction with plating to which they are welded. For the determination of the required section the following Tables can be applied for moduli from 5 to 2350 cm^3 without having to determine especially the effective width of plating. The section moduli of the sections are to be applied only in connection with these Rules. The section moduli given are based on the assumption of an effective width of plating of 40 · t (t= web thickness of the section).

The given scantlings of the sections are valid only for angles according to DIN EN 10056-1, bulb plates according to DIN EN 10067. where sections are being used which differ from the DIN standards the exact measurements and moduli of these sections are to be submitted.

2. Sectional Properties of Built Girders

The moments of inertia and section moduli of transverses, girders, etc. Determined according to the Rules, may be derived from the graphs on pages A-10 and A-11.

Modulus of Section in Conjunction with Plating

Section Modulus [cm^3]	Section in conjunction with plating in [mm]				Scantlings of brackers [mm]
					
5				- 50 x 5	
6				- 50 x 6	
7				- 50 x 7	
8					
9				- 65 x 6	
10				- 60 x 8	- 100 x 6,5
11	- 45 x 45 x 5		- 60 x 4	- 65 x 7	
12			- 60 x 5	- 75 x 6	
13				- 65 x 8	
14	- 50 x 50 x 5		- 60 x 6	- 75 x 7	
15				- 80 x 7	
16	- 45 x 45 x 7	- 60 x 40 x 5		- 75 x 8	
17	- 50 x 50 x 6				
18					
19		- 60 x 40 x 6		- 75 x 9	
20	- 50 x 50 x 7		- 80 x 5		- 100 x 6,5
21	- 55 x 55 x 6	- 65 x 50 x 5		- 75 x 10	
22		- 60 x 40 x 7			
23			- 80 x 6	- 90 x 8	
24					
25	- 60 x 60 x 6 - 50 x 50 x 9	- 75 x 50 x 5	- 80 x 7		
26				- 90 x 9	- 100 x 6,5
27		- 75 x 55 x 5		- 100 x 8	
28	- 55 x 55 x 8				
29		- 80 x 40 x 6 - 65 x 50 x 7		- 90 x 10	
30					
31				- 100 x 9	- 100 x 6,5

Section Modulus [cm^3]	**Section in conjunction with plating in [mm]**				**Scantlings of brackers** [mm]
32				- 110 x 8	
33	- 60 x 60 x 8			- 90 x 11	- 100 x 6,5
34	- 55 x 55 x 10 - 65 x 65 x 7		- 100 x 6		
35		- 75 x 50 x 7		- 100 x 10	
36		- 65 x 50 x 9		- 90 x 12	
37		- 75 x 55 x 7 - 80 x 40 x 8		- 110 x 9	- 120 x 6,5
38			- 100 x 7	- 120 x 8	
39		- 80 x 65 x 6		- 100 x 11	
40	- 70 x 70 x 7				
41	- 60 x 60 x 10				
42			- 100 x 8	- 110 x 10	- 130 x 6,5
43		- 90 x 60 x 6			
44	- 65 x 65 x 9	- 75 x 50 x 9		- 120 x 9	
45		- 100 x 50 x 6			
46	- 75 x 75 x 7				
47		- 75 x 55 x 9		- 110 x 11	
48					
49			- 120 x 6	- 120 x 10	- 140 x 6,5
50					
51	- 70 x 70 x 9				
52		- 80 x 65 x 8		- 110 x 12	
53	- 75 x 75 x 8 - 65 x 65 x 11				
54			- 120 x 7		
55				- 120 x 11	
56					

Modulus of Section in Conjunction with Plating

Section Modulus [cm^3]	Section in conjunction with plating in [mm]				Scantlings of brackets [mm]	
					Non-Flanged	Flanged *
57		- 90x60x8		- 130x10	- 150x6,5	
58				- 150x8		
59		- 90x75x7 - 100x50x8				
60	- 80x80x8		- 120x8			
61	- 70x70x11	- 100x65x7		- 120x12		
62						
63						
64		- 80x65x10		- 140x10	- 160x6,5	
65	- 75x75x10					
66		- 100x75x7	- 140x6			
68				- 120x13		
70						
72				- 140x11		
74	- 80x80x10	- 100x50x10	- 140x7	- 150x10	- 170x6,5	
76	- 75x75x12			- 120x14		
78		- 100x65x9				
80				- 140x12		
82			- 140x8			
84	- 90x90x9			- 160x10		
86					- 180x7	- 180x6,5
88	- 80x80x12	- 100x75x9		- 140x13		
90						
92			- 140x9	-150x12		
94						
96		- 100x65x11		- 140x14		
98						
100	- 80x80x14 - 90x90x11	- 130x65x8			- 190 x 7	- 190 x 6,5
105		- 100x75x11 - 120x80x8	- 160x7	- 160 x 12 - 180 x 10		

Section Modulus [cm^3]	Section in conjunction with plating in [mm]				Scantlings of brackets [mm]	
					Non-Flanged	Flanged *
110		- 130 x 75 x 8	- 160 x 8			
115	- 100x100x10			- 160 x 13	- 200 x 7,5	- 200 x 6,5
120	- 90x90x13		- 160 x 9	- 140 x 16		
125		- 130x65x10		- 160 x 14		
130		- 120x80x10		- 180 x 12	- 210 x 7,5	- 210 x 6,5
135	- 100x100x12	- 130x75x10		- 160 x 15		
140	- 110x110x10			- 180 x 13		
145	- 90x90x16		- 180 x 8	- 160 x 16		
150		- 130x65x12 - 150x75x9			- 220 x 8	- 220 x 6,5
155		- 120x80x12 - 130x90x10		- 180 x 14		
160	- 100x100x14		- 180 x 9	- 160 x 17		
165	- 110x110x12	- 130x75x12		- 180 x 15	- 230 x 8	- 230 x 7
170				- 160 x 18		
175		- 120x80x14	- 180 x 10			
180		- 150x75x11 - 130x90x12		- 180 x 16		
185	- 120x120x11		- 180 x 11	- 200 x 14	- 240 x 8,5	- 240 x 7
190		- 150x90x10 - 160x80x10		- 180 x 17		
195	- 110x110x14					
200		- 150x100x10		- 200 x 15	- 245 x 8,5	- 245 x 7
210	- 120x120x13		- 200 x 9	- 180 x 18	- 250 x 8,5	- 250 x 7
220	- 100x100x20		- 200 x 10	- 200 x 16 - 220 x 14		
230	- 130x130x12	- 150x90x12 - 160x80x12		- 200 x 17	- 260 x 9	- 260 x 7,5
240		- 150x100x12		- 220 x 15		
250	- 120x120x15	- 180x90x10	- 200 x 11,5	- 200 x 18		
260		- 160x80x14		- 220 x 16 - 240 x 14	- 270 x 9	- 270 x 7,5

Section Modulus [cm^3]	Section in conjunction with plating in [mm]				Scantlings of brackets [mm]	
					Non-Flanged	Flanged *
270	- 130x130x14			- 200 x 19		
280		- 150x100x14	- 220 x 10	- 220 x 17 - 200 x 20 - 240 x 15	- 280 x 9,5	- 280 x 8
290		- 180x90x12				
300	- 140x140x13	- 200x100x10		- 220 x 18		
310	- 130x130x16		- 220 x 11,5	- 240 x 16 - 260 x 14	- 290 x 9,5	- 290 x 9
320	- 120x120x20			- 220 x 19		
330		- 180x90x14		- 240 x 17 - 260 x 15 - 220 x 20		
340	- 140x140x15		- 240 x 10			
350				- 240 x 18 - 260 x 16	- 300 x 10	- 300 x 8
360		- 200x100x12				
370	- 150x150x14		- 240 x 11	- 240 x 19		
380	- 140x140x17	- 250x90x10		- 260 x 17	- 310 x 10,5	- 310 x 8,5
390			- 240 x 12	- 240 x 20		
400				- 260 x 18	- 315 x 10,5	- 315 x 8,5
410	- 150x150x16	- 200x100x14		- 280 x 16		
420			- 260 x 10		- 320 x 10,5	- 320 x 8,5
430				- 260 x 19 - 280 x 17		
440						
450	- 160x160x15		- 260 x 11			
460		- 250x90x12		- 260 x 20 - 280 x 18	- 330 x 11	- 330 x 9
470	- 150x150x18	- 200x100x16	- 260 x 12			
480						
490				- 300 x 17 - 280 x 19	- 340 x 11	- 340 x 9
500	- 160x160x17		- 260 x 13			

Modulus of Section in Conjunction with Plating

Section Modulus [cm^3]	Levhaları ile birlikte Profiller [mm]				Scantlings of brackets [mm]	
					Non-Flanged	Flanged *
510						
520				- 280 x 20 - 300 x 18		
530		- 250x90x14	- 280 x 11			
540					- 350 x 11,5	- 350 x 9
550	- 160x160x19			- 280 x 21		
560				- 300 x 19		
570			- 280 x 12			
580				- 280 x 22	- 360 x 11,5	- 360 x 9,5
590				- 300 x 20 - 320 x 18		
600	- 180x180x16	- 250x90x16	- 280 x 13			
620					- 370 x 12	- 370 x 9,5
640			- 280 x 14 - 300 x 11	- 300 x 21 - 320 x 19		
660	- 180x180x18			- 300 x 22		
680	- 200x200x18		- 300 x 12	- 320 x 20	- 380 x 12	- 380 x 10
700			- 300 x 13	- 300 x 23		
720				- 320 x 21 340 x 19	- 390 x 12	- 390 x 10
740	- 180x180x20 - 200x200x16		- 300 x 14	- 300 x 24 - 320 x 22	- 390 x 12,5	- 390 x 10
760				- 340 x 20		
780			- 300 x 15 - 320 x 12	- 320 x 23		
800				- 340 x 21	- 400 x 13	- 400 x 10,5
820			- 320 x 13	- 320 x 24		
840				- 340 x 22 - 360 x 20		
860			- 320 x 14		- 410 x 13	- 410 x 10,5
880				- 320 x 25 - 340 x 23		
900			- 340 x 12 - 320 x 15			
920	- 200x200x20			- 320 x 26 - 340 x 24	- 420 x 13,5	- 420 x 10,5

Modulus of Section in Conjunction with Plating

Section Modulus [cm^3]	Section in conjunction with plating in [mm]			Scantlings of brackets [mm]	
				**Non-Flanged**	**Flanged ***
940		- 320 x 16	- 360 x 22		
960		- 340 x 13	- 340 x 25		
980				- 430 x 13,5	- 430 x 11
1000		- 340 x 14			
1020			- 340 x 26 - 360 x 24		
1040		- 340 x 15	- 380 x 22	- 440 x 14	- 440 x 11
1060			- 340 x 27		
1080		- 340 x 16			
1100			- 340 x 28		
1120			- 360 x 26	- 450 x 14	- 450 x 11,5
1140			- 380 x 24		
1160					
1180		- 370 x 13			
1200				- 460 x 14,5	- 460 x 11,5
1220		- 370 x 14	- 360 x 28		
1240			- 380 x 26		
1260			- 400 x 24		
1280		- 370 x 15		- 470 x 15	- 470 x 12
1300					
1320		- 370 x 16	- 360 x 30		
1340					
1360			- 380 x 28 - 400 x 26	- 480 x 15	- 480 x 12
1380		- 370 x 17	- 420 x 28		
1400					
1450		- 370 x 18		- 490 x 15,5	- 490 x 12,5
1500		- 400 x 14	- 380 x 30 - 400 x 28		

Modulus of Section in Conjunction with Plating

Section Modulus [cm^3]	Section in conjunction with plating in [mm]			Scantlings of brackets [mm]	
				**Non-Flanged**	**Flanged***
1550		- 400 x 15	- 420 x 26	- 500 x 16	- 500 x 12,5
1600		- 400 x 16	- 400 x 30	- 510 x 16	- 510 x 13
1650		- 400 x 17	- 420 x 28 - 440 x 26		
1700				- 520 x 16,5	- 520 x 13
1750		- 400 x 18	- 420 x 30		
1800		- 400 x 19	- 440 x 28		
1850		- 430 x 15		- 530 x 16,5	- 530 x 13,5
1900			- 420 x 32	- 540 x 17	- 540 x 13,5
1950		- 430 x 16	- 440 x 30 - 460 x 28		
2000		- 430 x 17			
2050				- 550 x 17,5	- 550 x 14
2100		- 430 x 18	440 x 32 - 460 x 30		
2150		- 430 x 19		- 560 x 17,5	- 560 x 14
2200					
2250		- 430 x 20		- 570 x 18	- 570 x 14,5
2300			- 460 x 32		
2350		- 430 x 21			
2400				- 580 x 18	- 580 x 14,5
2450				- 585 x 18,5	- 585 x 14,5

* **Width of flanged of flanged brackets:**

Section Modulus [cm^3]	Width of Flange [mm]
85 — 300	50
300 — 450	55
450 — 600	60
600 — 750	65
750 — 900	70
900 — 1050	75
1050 — 1200	80
1200 — 1350	85
1350 — 2450	90

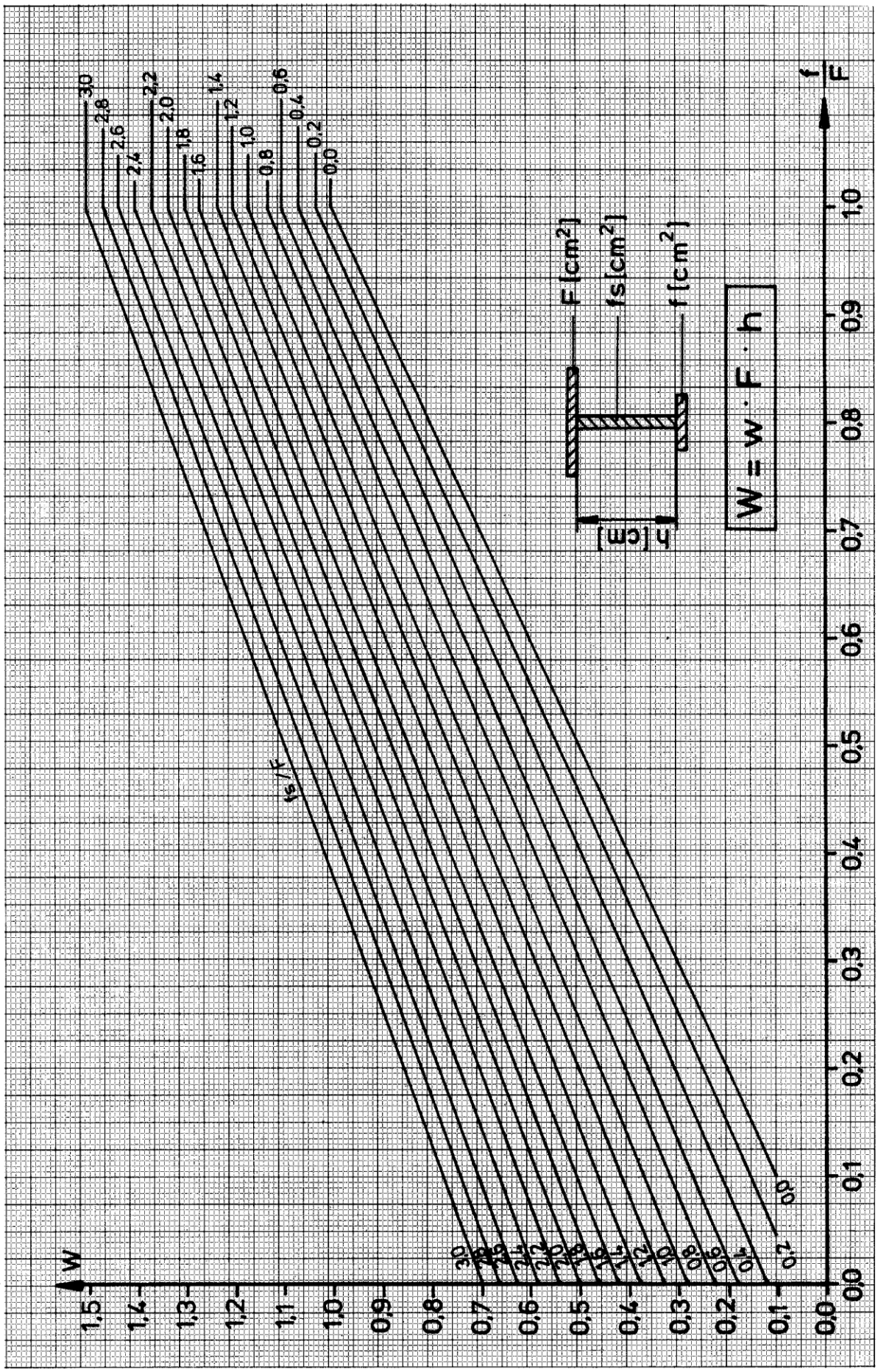

Smallest Section Modulus of I and T Girders

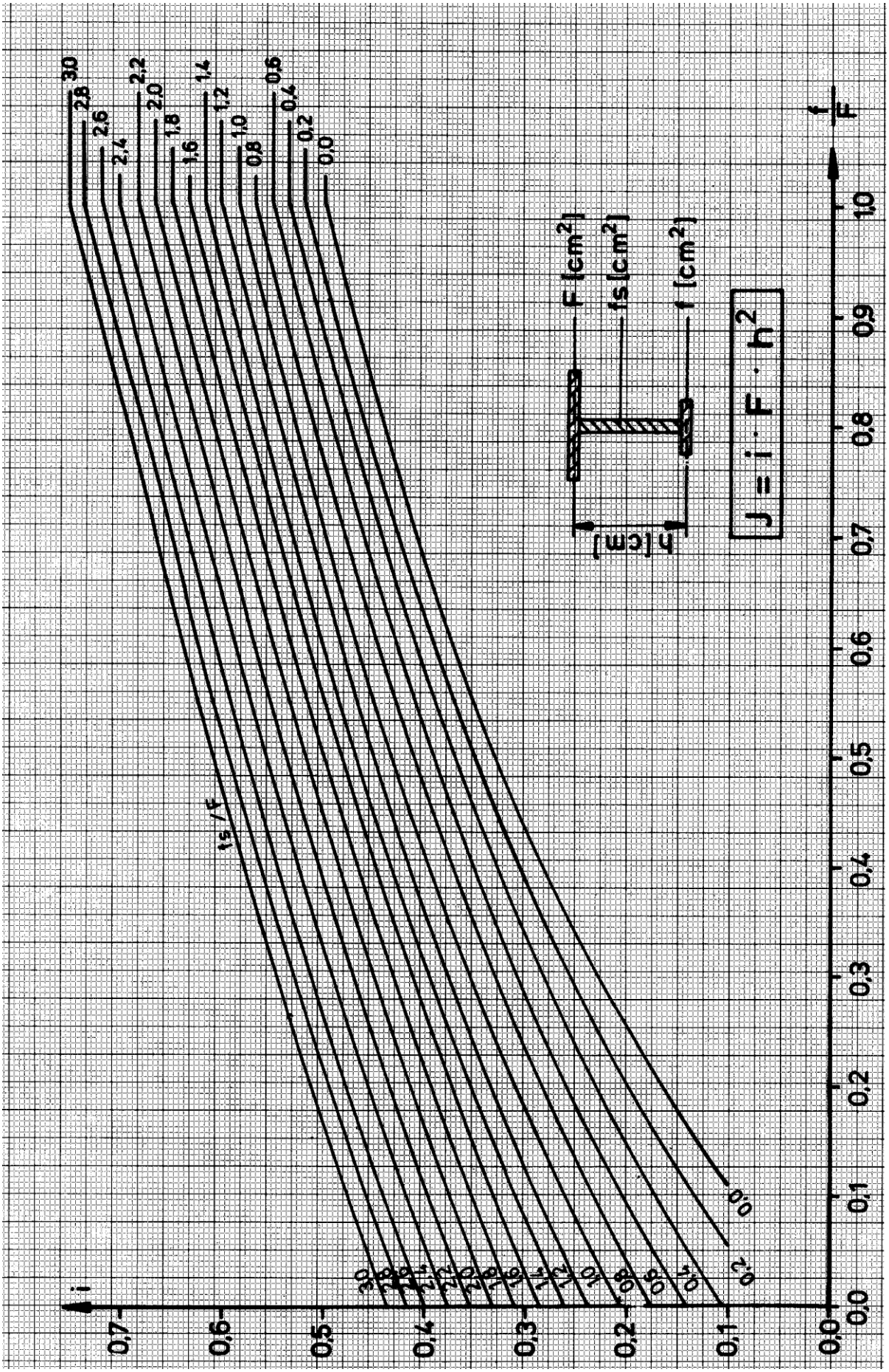

Moment of Inertia of I and T Girders

TÜRK LOYDU FREEBOARD MARKINGS

On application, Türk Loydu calculate freeboards in accordance with the Regulations of the International Load Line Convention, 1966 and with any existing relevant special national regulations, and subsequently issue the necessary Load Line Certificates wherever authorized to do so by the competent Authorities of the individual States.

Applications for issuance of Load Line Certificates or for surveys for freeboard admeasurements are to be made to Türk Loydu Head Office. Freeboards are then calculated on the basis of the survey reports and admeasurements.

The load lines determined by Türk Loydu are marked amidships in accordance with the freeboard certificate as per sketches on page A-13 which is drawn for the starboard side. Where no other mark is stipulated by national regulations of the respective foreign Authorities, there will be added the letters **TL**. The ring, lines and letters are to be painted white or yellow on a dark ground, or else, black on a light ground. They shall be permanently marked on both sides of the ship.

With ships having a limited range of service, depending on the respective range, the seasonal markings, such as for Tropical and Winter North Atlantic trade, are omitted.

Ships of over 100 m. length do not get a WNA marking. For these ships, the WNA marking is affixed at the same level as the W-mark.

The Load Line Convention, 1966 came into force on 21st July, 1968, Load Line Convention, 1930 continues to be in force. Where the advantages of the Load Line Convention, 1966 are to be intended upon, the respective vessels are to comply with all requirements of that Convention.

Freeboard Marking for Seagoing Ships

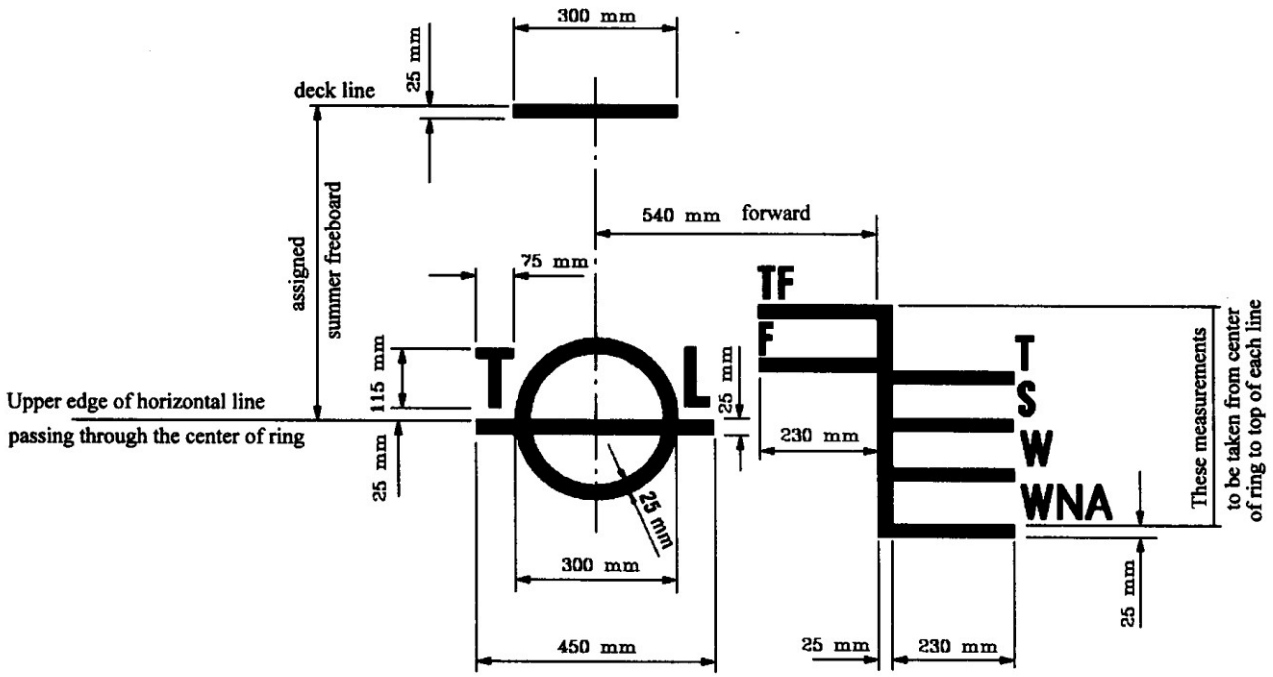

Freeboard Marking for Seagoing Ships Carrying Timber Deck Cargoes

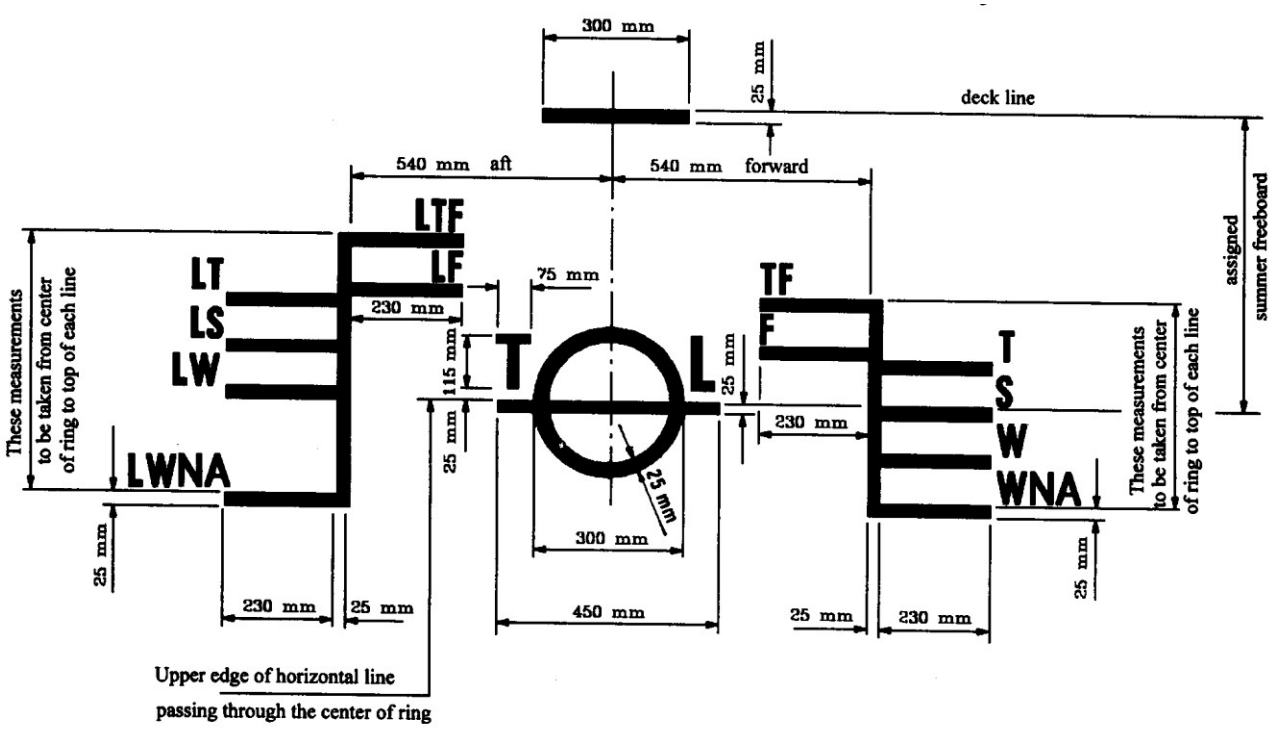

ICE CLASS DRAUGHT MARKING

A. Ice Class Draught Marking of TL

According to Section 14, B.2.1, ship's sides are to be provided with a warning triangle and with an ice class draught mark at the maximum permissible ice class draught amidships if the summer load line in fresh water is located at a higher level than the UIWL. The purpose of the warning triangle is to provide information on the draught limitation of the vessel when it is sailing in ice for masters of icebreakers and for inspection personel in ports.

Note

1. *The ice class draught mark is to be centred 540 mm abaft the centre of the load line ring or 540 mm abaft the vertical line of the timber load line mark, if applicable (the sketch is shown for the starboard side).*

The ice class draught mark is to be 230 mm in length and 25 mm in width.

2. *The upper edge of the warning triangle is to be centred above the ice class draught mark, 1000 mm higher than the Summer Load Line in fresh water but in no case higher than the deck line. The sides of the warning triangle are to be 300 mm in length and 25 mm in width.*

3. *The dimensions of all lettering are to be the same as those used in the load line mark.*

4. *The warning triangle, ice class draught mark and lettering are to be cut out of 5 - 8 mm plate and then welded to the ship's side. They are to be painted in a red or yellow reflecting colour in order to be plainly visible even in ice conditions.*