TÜRK LOYDU

RULES FOR THE CLASSIFICATION OF NAVAL SHIPS

Part E

Chapter 102 - Hull Structures and Ship Equipment

JAN 2016

This latest edition incorporates all rule changes. The latest revisions are shown with a vertical line. The section title is framed if the section is revised completely. Changes after the publication of the rule are written in red colour.

Unless otherwise specified, these Rules apply to ships for which the date of contract for construction is on or after 1st January 2016.

If there is a difference between the rules in English and in Turkish, the rule in English is to be considered as valid. This publication is available in print and electronic pdf version. Once downloaded, this document will become UNCONTROLLED. Please check the website below for the valid version.

http:/www.turkloydu.org

TÜRK LOYDU

Head Office

Postane Mah. Tersaneler Cad. No:26 Tuzla 34944 İSTANBUL / TÜRKİYE

Tel : +90 216 581 37 00

Fax : +90 216 581 38 00

E-mail : İnfo@turkloydu.org

http://www.turkloydu.org

Regional Offices

Ankara

Eskişehir Yolu Mustafa Kemal Mah. 2159. Sokak No : 6/4 Çankaya - ANKARA / TÜRKİYE

Tel : +90 312 219 56 34

Fax : +90 312 219 68 25

E-mail : ankara@turkloydu.org

İzmir

Atatürk Cad. No: 378 K.4 D.402 Kavalalılar Apt. 35220 Alsancak - İZMİR / TÜRKİYE

Tel : +90 232 464 29 88

Fax : +90 232 464 87 51

E-mail : izmir@turkloydu.org

Adana

Çınarlı Mah. Atatürk Cad. Aziz Naci İş Merkezi No:5 K.1 D.2 Seyhan - ADANA / TÜRKİYE

Tel : +90 322 363 30 12

Fax : +90 322 363 30 19

E-mail : adana@turkloydu.org

Marmaris

Atatürk Cad. 99 Sok. No:11 Kat:4 Daire 6 Marmaris - MUĞLA / TÜRKİYE

Tel : +90 252 412 46 55

Fax : +90 252 412 46 54

E-mail : marmaris@turkloydu.org

Chapter 102 – Hull Structures and Ship Equipment

Section 5 Design Loads

Section 6 Longitudinal Strength

Section 7 Bottom and Shell Structures

Section 8 Decks and Longitudinal Walls

Section 9 Transverse Bulkheads and Walls

Section 10 Tank Structures

Section 11 Stem and Sternframe Structures

Section 12 Rudder and Manoeuvring Arrangement

Section 13 Strengthening for Navigation in Ice

Section 14 Foundations, Hatchways and Hatchcovers

Section 15 Welded Joints

Section 16 Noise, Vibration and Shock Considerations

Section 17 Fatigue Strength

Section 18 Anchoring and Mooring Equipment

Section 19 Hull Outfit

Section 20 Structural Fire Protection

Section 21 Residual Strength

Section 22 Amphibious Warfare Ships

Section 23 Provisions for Flight Operations

SECTION 1

GENERAL

A. Application

1. These Rules apply to naval surface ships classed **100Np**. For Characters of Classification and Class Notations, see Chapter 101 - Classification and Surveys (Naval Ship Technology).

1.1 The requirements apply to hull structures and equipment of monohull, displacement type of naval ships. They may also be applied to other types of naval surface ships and complete (parts of) auxiliary naval ships with Notation **AUX-N** according to mutual agreement.

1.2 For design and dimensioning of special hull structures, e.g. catamarans, SWATH, hydrofoil craft, surface effect ships, air-cushion vehicles the TL Rules - Chapter 7 - High Speed Craft, Section 3 may be applied, see also Chapter 101 - Classification and Surveys, Section 2, C.

1.3 The right of interpretation of their technical Rules rests with TL alone.

2. Equivalence

2.1 Naval ships deviating from the TL Rules in their type, equipment or in some of their parts may be classed, provided that their structures or equipment are found to be equivalent to the TL requirements for the respective Class.

2.2 In this respect, **TL** can accept alternative design, arrangements and calculation/analyses (FE, FMEA, etc.) which are suitable to satisfy the intent of the respective **TL** requirements and to achieve the equivalent safety level.

3. Notations

3.1 Service range

Ships complying with the rule requirements for a restricted range of service will have a corresponding Notation**s Y, K50/20, K6** affixed to the Character of Classification. The Notation will indicate the relevant kind of restriction, e.g.:

- Geographical designation (name) of the operation range
- Distance from defined ports and coast line
- Restrictions related to weather conditions (wave height, etc.), possibly combined with speed limitations

The applicable range of service will be agreed between the Naval Authority and TL.

3.2 Class Notation IW

For ships suitable for in-water survey which will be assigned the Class Notation **IW**, the requirements of Section 3, F.5.1 are to be observed.

3.3 Class Notations RSD and ERS

Naval ships, for which special analysis procedures have been carried out, will be assigned the Notation **RSD** ("Rational Ship Design").

If the data developed for **RSD** are made available in a database to provide assistance during operation, the Class Notation **ERS** will be assigned. See also Chapter 101 - Classification and Surveys, Section 2, C.

3.4 Further notations

Additional details regarding the definition of ship types, structural assessment, machinery and electrical installations and special equipment are given in Chapter 101 - Classification and Surveys, Section 2.

4. Ambient conditions

4.1 General operating conditions

4.1.1 The selection, layout and arrangement of the ship's structure and all shipboard machinery shall be such as to ensure faultless continuous operation under defined standard ambient conditions.

More stringent requirements must be observed for Class Notation **AC1** (see Chapter 101 - Classification and Surveys, Section 2, C).

For the Class Notation **ACS** variable requirements for unusual types and/or tasks of naval ships can be discussed case by case, but shall not be less than the standard requirements.

Components in the machinery spaces or in other spaces which comply with the conditions for Notations **AC1** or **ACS** must be approved by TL.

4.1.2 Inclinations and movements of the ship

The design conditions for static and dynamic inclinations of a naval ship have to be assumed independently from each other. The standard requirements and the requirements for Class Notation **AC1** are defined in Table 1.1.

The effects of elastic deformation of the ship's hull on the machinery installation have to be considered.

4.1.3 Environmental conditions

The design environmental conditions for a naval ship are contained in Table 1.2. In addition to the standard requirements also the requirements for Class Notation **AC1** are specified.

4.2 Vibration

Design, construction and installation must take account of stresses caused by vibration.

Criteria regarding vibration are described in Section 16, C. and Chapter 104 - Propulsion Plants, Section 1, D.2.

4.3 Shock

For consideration of shock loads, see Section 16, D.

B. Definitions

1. General

In the following definitions only SI-units are used. Unless otherwise mentioned, the dimensions according to 2., 3. and 4. are to be inserted [m] into the formulae stated in the following Sections.

2. Co-ordinate system

For the use of these Rules the fixed, right-handed co-ordinate system 0, x, y, z as defined in Fig. 1.1 is introduced. The origin of the system is situated at the aft end of the length **L**, at centerline and on the moulded baseline at the ship's keel. The x-axis points in longitudinal direction of the ship positive forward, the y-axis positive to port and the z-axis positive upwards. Angular motions are considered positive in a clockwise direction about the three axes.

3. Principal dimensions

3.1 Length L

The length **L** of the ship is the distance from the moulded side of the plate stem to the fore side of the stern or transom measured on the design waterline at the draught **T**. Other forms of stem are to be specially considered.

3.2 Length L_{OA}

The length over all $\mathbf{L_{OA}}$ is the distance between the most forward and most aft element of the ship, permanent outfit included, measured parallel to the design water line.

3.3 Forward perpendicular FP

The forward perpendicular coincides with the moulded side of the plate stem on the waterline on which the length **L** is measured.

3.4 Breadth B

The breadth **B** is the maximum moulded breadth of the design waterline at draught **T.**

3.5 Breadth B_{Max}

The breadth $\mathbf{B_{Max}}$ is the greatest moulded breadth of the ship. For ships with unusual cross section the breadth will be specially considered.

3.6 Depth H

The depth **H** is the vertical distance, at the middle of the

length **L**, from the base line to top of the deck beam at side on the uppermost continuous deck.

3.7 Draught T

The draught **T** is the vertical distance, at the middle of the length **L**, from base line to the deepest design waterline, as estimated for the lifetime of the ship.

3.8 Draught

The draught $\mathbf{T_{MAX}}$ is the vertical distance between the lowest point of the immersed hull including appendages (e.g. domes, rudders, propellers, thrusters, etc.) and the design waterline, movable parts, like fins, rudder propellers, sonars, etc. considered retracted.

4. Frame spacing a

The frame spacing **a** will be measured from moulding edge to moulding edge of frame.

Table 1.1 Design limit for ship inclinations and movements

Type of movement	Type of inclination	Design limit conditions	
		Standard requirements	**Notation AC1**
Static condition	**Inclination athwartships: (1)** Main and auxiliary machinery	15°	25°
	Other installations **(2)**	22,5°	25°
	No uncontrolled switches or functional changes	45°	45°
	Ship's structure	acc. to stability requirements	acc. to stability requirements
	Inclinations fore and aft: (1) Main and auxiliary machinery	5°	5°
	Other installations **(2)**	10°	10°
	Ships structure	acc. to stability requirements	acc. to stability requirements
Dynamic condition	**Rolling:** Main and auxiliary machinery	22,5°	30°
	Other installations **(2)**	22,5°	30°
	Pitching: Main and auxiliary machinery	7,5°	10°
	Other installations **(2)**	10°	10°
	Accelerations: Vertical (pitch and heave)	a_z [g] **(3)**	32 °/s^2 (pitch) 1,0 g (heave)
	Transverse (roll, yaw and sway)	a_y [g] **(3)**	48 °/s^2 (roll) 2 °/s^2 (yaw) a_y [g] **(3)** (sway)
	Longitudinal (surge)	a_x [g] **(3)**	a_x [g] **(4)**
	Combined acceleration	acceleration ellipse **(3)**	direct calculation

(1) *Thwart ships and fore and aft inclinations may occur simultaneously*
(2) *Ship's safety equipment, switch gear and electric/electronic equipment*
(3) *Defined in Section 5, B. (g = acceleration of gravity)*
(4) *To be defined by direct calculation*

Table 1.2 Design environmental conditions

Environmental area	Parameters	Design conditions	
		Standard	**Notation AC1**
Outside the ship/air	Temperature at atmospheric pressure at relative humidity of	- 25 to + 45 °C 1000 mbar 60 % **(2)**	- 30 to + 55 °C **(1)** 900 to 1100 mbar 100 %
	Temperature for partially open spaces at the same conditions	-	- 10 to + 50 °C **(1)**
	Salt content	1 mg/m^3	1 mg/m^3
		withstand salt-laden	withstand salt-laden spray
	Dust/sand	to be considered	filters to be provided
	Wind velocity (systems in operation)	43 kn **(3)**	90 kn
	Wind velocity (systems out of operation)	86 kn **(3)**	100 kn
Outside the ship/seawater	Temperature **(4)**	- 2 to + 32 °C	- 2 to + 35 °C
	Density acc. to salt content	1,025 t/m ^{3}	1,025 t/m ^{3}
	Flooding	withstand temporarily	withstand temporarily
Outside the ship/icing of surface	Icing on ship's surfaces up to 20 m above waterline	see Section 2, B.3.4	see Section 2, B.3.4
Outside the ship/navigation in ice	Ice Class **B**	Drift ice in mouth of rivers and coastal	Drift ice in mouth of rivers and coastal regions
Entrance to the ship/for design of heating/cooling systems	Air temperature	-15 to + 35°C	-15 to + 35°C
	Max. heat content of the air	100 kJ/kg	100 kJ/kg
	Sea water temperature	- 2 to + 32 °C	- 2 to + 32 °C
Inside the ship/all spaces **(5)**	Air temperature at atmospheric pressure at relative humidity of	0 to + 45 °C 1000 mbar up to 100% (+45°)	0 to + 45 °C 1000 mbar 100 %
	Salt content	1 mg/m^3	1 mg/m^3
	Oil vapour	withstand	withstand
	Condensation	to be considered	to be considered
Inside the ship/air- conditioned areas	Air temperature	0 to + 40 °C	0 to + 45 °C
	Max. relative humidity	80%	100 %
	Recommended ideal climate for manned computer spaces	-	Air temperature + 20 to + 22 °C at 60 % rel. humidity
Inside the ship/in electrical devices with higher degree of heat dissipation	Air temperature	0 to + 55 °C	0 to + 55°C
	Max. relative humidity	100 %	100 %

(1) *Higher temperatures due to radiation and absorption heat have to be considered*
(2) *100% for layout of electrical installations*
(3) *For lifting devices according to TL Rules - Guidelines for the Construction Survey of Lifting Appliances, Section 2*
(4) *TL may approve lower limit water temperatures for ships operating only in special geographical areas*
(5) *For recommended climatic conditions in the ship's spaces see also Chapter 107 - Ship Operation Installations and Auxiliary Systems, Section 11, F.*

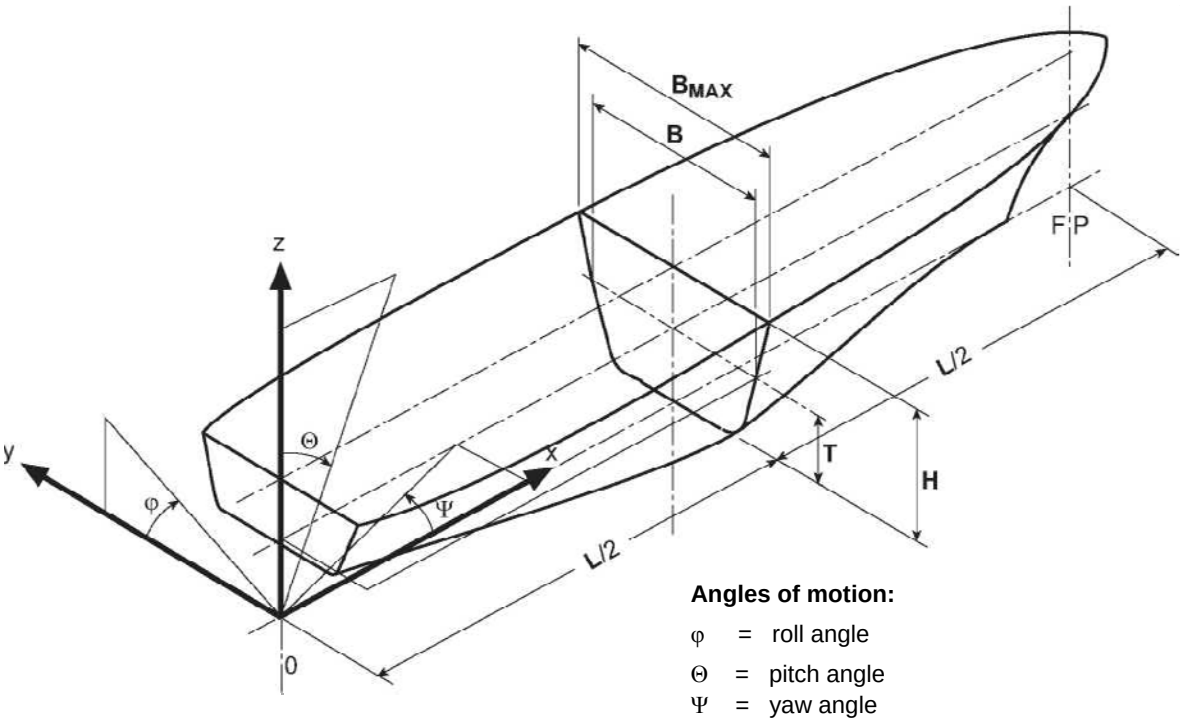

Fig. 1.1 Coordinate system and angles of motion

5. Displacement Δ

The displacement **Δ** represents the mass of the ship in metric tons at the draught **T**.

6. Block coefficient C_B

Moulded block coefficient at design draught **T**, based on the length **L**.

$$C_B = \frac{\text{moulded displacement volume } [m^3] \text{ at } \mathbf{T}}{\mathbf{L} \cdot \mathbf{B} \cdot \mathbf{T}}$$

7. Ship speed

7.1 Speed v_0

Expected maximum, continuous ahead speed v_0 [kn] of the ship in calm water at the draught **T**, when the total available driving power is solely acting on the propulsion devices.

7.2 Speed v_{max}

Expected maximum ahead speed v_{max} [kn] of the ship in calm water, at the draught **T**, when the total available driving power is solely acting on the propulsion devices. The speed is related to an overload condition, permissible only for a defined, relatively short time period.

7.3 Speed v_M

Expected economic, continuous ahead cruising speed v_M [kn] of the ship, which provides the maximum radius of action.

8. Rated driving power

The rated driving power [kW] is defined as continuous power to be delivered by the propulsion machinery for running at continuous speed v_0 and with the total available power solely acting on the propulsion devices.

9. Auxiliary electrical power

The auxiliary electrical power [kVA] is defined as the continuous electrical power at continuous speed v_0, which is not directly used for propulsion of the ship, but for driving all kinds of auxiliary devices and equipment. The degree of redundancy shall be defined in the building specification.

10. Definition of decks

10.1 Bulkhead deck

Bulkhead deck is the deck up to which the watertight bulkheads are carried.

10.2 Freeboard deck

The freeboard deck is normally the uppermost complete deck exposed to weather and sea, which has permanent means of closing all openings in the weather part thereof, and below which all openings in the sides of the ship are fitted with permanent means of watertight closing.

10.3 Strength deck

Strength deck is the deck or the parts of a deck which form the upper flange of the effective longitudinal structure.

10.4 Weather deck

All free decks and parts of decks exposed to the sea are defined as weather deck.

10.5 Internal decks

Internal decks are decks inside closed structures.

C. General Aspects on Design

1. Accessibility

All parts of the hull are to be accessible for survey and maintenance. For small spaces not intended to be accessible, the corrosion protection requirements according to Section 3, F.3. have to be observed.

2. Stability

2.1 Intact stability

Ships will be assigned Class only after it has been proven and demonstrated, that their intact stability is adequate for the service intended.

Adequate intact stability means compliance with the standards laid down by the Naval Authority in the building specification and agreed by **TL**.

2.2 Damage stability

Criteria for damage stability are specified in Section 2, C. The subdivision status of the ship is defined by a five digit code.

Note

1. Aspects regarding signature

1.1 General

The operation and survivability of a naval ship depends to a far extent on a successful signature control. This demands special consideration for the hull structures' design and the equipment to be used. The relative importance of the different aspects of the ship's signature and the intended extent of compensation have to be defined by the Naval Authority in the building specification.

The signature control of the naval ship has to be considered during the whole design process. The main types of such signatures are listed in 1.2 to 1.8 and relevant requirements, if applicable, are mentioned.

1.2 Visibility

Visibility is still a design aspect in not open sea areas, like littoral waters and between islands, where it is not possible to make full use of electronic sensors. Visibility may be influenced by low and flat superstructures of the ship and by camouflage paint.

1.3 Infra-red signature (IR)

A naval ship may create a characteristic temperature level above environmental temperature which can lead to its detection. As the output of the hot exhaust gases from the main propulsion plant (internal combustion engines, gas turbines) show in general the highest temperature level, a careful design and positioning of these exhaust outlets will be necessary. The outlets may be water-cooled, may penetrate the ship's shell below the design waterline or very near above it, or even may be switched to the expected enemy-free side of

the ship. The requirements for such a piping system are defined in Chapter 107 - Ship Operation Installations and Auxiliary Systems, Section 8, M.

In addition it may become necessary to reduce and/or equalize the temperature of the different parts of the ship's surface structure including the hull. This can be achieved by a seawater cooling system for which the requirements are given in Chapter 107 - Ship Operation Installations and Auxiliary Systems, Section 9, P.

1.4 Radar cross section (RCS)

The radar reflection of the ship's body and equipment is the most important signature at large distances. Favourable stealth characteristics of the ship aim to achieve a relatively late and dim identification of the naval ship. This can be achieved by afloat ship silhouette, inclined side shell (flare) and superstructure walls (tumblehome), by providing large, flat surfaces with sharp edges which may cover also the ship's equipment, and by avoiding "corner effects ".

1.5 Electromagnetic emissions

Naval ships disturb the natural magnetic field while moving at sea. This effect can be used for detection or immediate weapon action. These unintentional electromagnetic emissions may be reduced by the consequent use of non-ferrous and/or non-magnetizable materials for hull, machinery and equipment. The types of non-magnetizable austenitic steels suitable for the hull structure of naval ships are defined in Section 3, B. 4. Further details and the application of non-magnetizable materials for forged or cast steel components, anchor chains, etc. are given in the TL Rules Chapter 103 - Special Materials for Naval Ships.

Further methods may be an active demagnetization procedure to be applied at a special naval establishment and by providing a kind of Faraday cage around devices with strong electromagnetic emissions.

1.6 Radiated-noise

It must be a design target to "hide" the underwater noise of the ship within the natural noise of the sea as far as possible and to avoid noise spectra, which are specific for a certain type of naval ship.

The acoustic signature, like airborne noise, underwater noise and sonar self noise as well as the requirements for the acoustic verification by measurements are given in Section 16, B.

1.7 Hydrodynamic pressure

Hydrodynamic pressures can cause an activating of underwater weapons. This influence can be reduced by hydro mechanical optimization of the propulsion elements and also of the appendages to the underwater hull.

The requirements for naval propellers and for other propulsion systems, like cycloidal propellers, podded drives, dynamic positioning systems are given in Chapter 104 - Propulsion Plants, Section 7.

1.8 Solid and liquid waste

Avoiding detection of the position of the naval ship due to liquid and/or solid wastes, treatment and/or storage of these wastes on board leads to considerable space requirement, which constitutes a not negligible design criterion.

The requirement for waste treatment are given in Chapter 107 - Ship Operation Installations and Auxiliary Systems, Section 10 and special aspects for fire fighting in case of waste incineration are defined in Chapter107 - Ship Operation Installations and Auxiliary Systems, Section 9, L.

3. Survivability

3.1 Definition

The survivability of a naval ship is to be regarded as the degree of ability to withstand a defined weapon threat and to maintain at least a basic degree of safety and operability of the ship.

Survivability is threatened by:

- loss of global strength of the hull structure
- loss of buoyancy and/or stability
- loss of maneuverability
- fire in the ship and ineffective fire protection or fire fighting capability
- direct destruction of machinery, equipment or control systems
- direct destruction of weapons and sensors

- threat to the crew

3.2 Measures for improved survivability

The design of a ship which is classed as naval ship has to consider a series of possible measures to improve survivability. The TL Rules for naval surface ships offer various measures and Class Notations to achieve improved survivability. The degree of including such measures in an actual project has to be defined by the Naval Authority.

3.3 Measures regarding hull structures

In this Chapter the following measures to improve survivability are included.

3.3.1 Residual strength

Residual strength after structural damage caused by military action has to be considered and calculated. Degree and character of the damage and any other basic assumptions for these calculations have to be defined by the Naval Authority in the building specification. The relevant calculations and their results have to be submitted to TL if the Class Notation **RSM** shall be assigned, for further details see Section 21.

3.3.2 Shock strength and protection

The assessment of shock effects, recommendations to improve the shock strength of the hull, measures for the protection of equipment and crew against shock, etc. are given in Section 16, D.

3.3.3 Structural fire protection

The basic requirements for structural fire protection and the more stringent requirements for Class Notation **SFP** are defined in Section 20.

Note

Projectile and splinter protection

Naval ships may be exposed to high performance projectiles from even relatively small arms and to splinters from external and internal blasts. The actual threat and its level of protection have to be defined by the Naval Authority in the building specification. If lightweight compound armour or other adequate measures - at least for protection of critical action centres on board - have to be provided, its composition and connection with the ship's structure will be discussed and determined between the Naval Authority, the Shipyard and TL.

D. Documents

1. Documents for approval

1.1 The scope of documents to be submitted for approval is defined in Table 1.3. All documents have to be submitted to TL in Turkish or English language.

1.2 The drawings must contain all data necessary for assessment and approval. Where deemed necessary, calculations and descriptions of the ship's elements are also to be submitted. Any non-standard symbols used are to be explained in a key list. All documents must show the number of the project and the name of the Naval Authority and/or Shipyard.

1.3 The supporting calculations shall contain all necessary information concerning reference documents (parts of the specification, drawings, and global computations, computations for elements, following calculations). Literature used for the calculations has to be cited, important but not commonly known sources shall be added as copy.

The choice of computer programs according to the "State of the Art" is free. The programs may be checked by TL through comparative calculations with predefined test examples. A generally valid approval for a computer program is, however, not given by TL.

The calculations have to be compiled in a way which allows identifying and checking all steps of the calculations with regard to input and output in an easy way. Handwritten, easily readable documents are acceptable.

Comprehensive quantities of output data shall be presented in graphic form. A written comment to the main conclusions resulting from the calculations has to be provided.

1.4 TL reserve the right to require additional documentation if the submitted one is insufficient for an assessment of the ship or essential parts thereof. This may especially be the case for plants and equip-

ment related to new developments and/or which are not tested on board to a sufficient extent.

1.5 The drawings are to be submitted in triplicate, all calculations and supporting documentation in one copy for examination at a sufficiently early date to ensure that they are approved and available to the Surveyor at the beginning of the manufacture or installation of the ship or of important components.

1.6 The survey of the ship's construction will be carried out on the basis of approved documents. Once the documents submitted have been approved by TL they are binding for the execution of the work. Subsequent modifications and extensions require the approval of TL before becoming effective.

2. Documents on board

To allow quick action in case of surveys, special operation and especially in case of damage, the following documentation must be kept on board and shall be made available to the TL Surveyor on request:

- Class Certificates
- reports on surveys performed previously
- final Loading Manual and Stability Handbook
- description of corrosion control system
- approved drawings and other documentation handed out to the Naval Authority and containing particulars or instructions of significance in respect of the Classification requirements (e.g. use of special steel, etc.)
- list of important testing/monitoring procedures to be followed in connection with validity of Class

3. Operating and maintenance instructions

The operating and maintenance instructions, warning signs, etc. have to be prepared in English and in the user's language.

E. Workmanship

1. General

1.1 Requirements to be complied with by the Shipyard and the manufacturers

1.1.1 Every manufacturing plant must be provided with suitable equipment and facilities to enable proper handling of the materials, manufacturing processes, structural components, etc. TL reserve the right to inspect the plant accordingly or to restrict the scope of manufacture to the potential available at the plant.

The manufacturing plant must have at its disposal sufficiently qualified personnel. TL must be advised of the names and areas of responsibility of all supervisory and control personnel. TL reserve the right to require proof of qualification.

1.1.2 The shipyard or manufacturing plant and its subcontractors must get approval from TL for the type of work they provide for the manufacture and installation of naval ships. Approval can only be given if the conditions defined in detail in the TL Rules Chapter 2 and 3 - Materials and Welding are complied with.

1.1.3 The fabrication sites, stores and their operational equipment shall also comply with the requirements of the relevant Safety Authorities and Professional Associations. The shipyard or manufacturing plant is alone responsible for compliance.

1.2 Quality control

1.2.1 The Shipyard shall operate a quality assurance system, such as ISO 9001 or equivalent.

1.2.2 As far as required and expedient, the manufacturer's personnel has to examine all structural components both during the manufacture and on completion, to ensure that they are complete, that the dimensions are correct and that workmanship is satisfactory and meets the standard of good shipbuilding practice.

1.2.3 Upon inspection and corrections by the manufacturing plant, the structural components are to be

shown to the TL Surveyor for inspection, in suitable sections, normally in unpainted condition and enabling proper access for inspection.

1.2.4 The Surveyor may reject components that have not been adequately checked by the plant and may demand their re-submission upon successful completion of such checks and corrections by the plant.

2. Structural details

2.1 Details in manufacturing documents

2.1.1 All significant details concerning quality and functional ability of the components concerned shall be entered in the manufacturing documents, workshop drawings, etc. This includes not only scantlings but, where relevant, such items as surface conditions (e.g. finishing of flame cutting edges and weld seams), and special methods of manufacture involved as well as inspection and acceptance requirements and, where relevant, permissible tolerances.

A production standard which considers the special requirements for the manufacturing of naval ships has to be defined by the Shipyard or manufacturing plant and approved by TL.

For details of welded joints see Section 15 and TL Rules – Chapter 3 - Welding, Section 12 - Steel and Iron Materials, Annex 1 (Steel) and Annex 2 (Aluminium).

2.1.2 If, due to missing or insufficient details in the manufacturing documents, the quality or functional ability of the component cannot be guaranteed or is doubtful, TL may require appropriate improvements. This includes the provision of supplementary or additional parts, e.g. reinforcements, even if these were not required at the time of plan approval.

2.2 Cut-outs, plate edges

2.2.1 The free edges (cut surfaces) of cut-outs, hatch corners, etc. are to be properly prepared and are to be free from notches. As a general rule, cutting drag lines, etc. must not be welded out, but are to be smoothly ground. All edges should be broken or in cases of highly stressed parts, should be rounded off.

2.2.2 Free edges on flame or machine cut plates or flanges are not to be sharp cornered and are to be finished off as laid down in 2.2.1 This also applies to cutting drag lines, etc., in particular to the upper edge of shear strake and analogously to weld joints, changes in sectional areas or similar discontinuities.

2.3 Cold forming

2.3.1 For cold forming, like bending, flanging, beading of plates the minimum average bending radius should not be less than 3 times the plate thickness t and must be at least 2 t. Regarding the welding of cold formed areas, see Section 15, B.2.6.

2.3.2 In order to prevent cracking, flame cutting flash or sheering burrs must be removed before cold forming. After cold forming all structural components and, in particular, the ends of bends (plate edges) are to be examined for cracks. Except in cases where edge cracks are negligible, all cracked components are to be rejected. Repair welding is not permissible.

2.4 Assembly, alignment

2.4.1 The use of excessive force is to be avoided during the assembly of individual structural components or during the erection of sub-assemblies. As far as possible, major distortions of individual structural components should be corrected before further assembly.

2.4.2 Girders, beams, stiffeners, frames, etc. that are interrupted by bulkheads, decks, etc. must be accurately aligned. In the case of critical components, control drillings are to be made where necessary. After completion the control drillings are to be closed by welding.

2.4.3 After completion of welding, straightening and aligning must be carried out in such a manner that the material properties will not be significantly influenced. In case of doubt, TL may require a procedure test or a working test to be carried out.

3. Corrosion protection

The requirements of Section 3, E. and F. apply.

Table 1.3 Documentation to be submitted for Classification

Serial No.	Description
	General Information
1	General arrangement plan
2	Deck plan
3	Technical specification
4	Lines plan
5	Material specification (for steel or aluminium hull)
6	List of submitted drawings
	Hull Structures and Ship Equipment
7	Midship section
8	Other typical sections
9	Bottom structure
10	Engine room structure (including engine foundations)
11	Shell expansion plan
12	Ice strengthening
13	Decks
14	Superstructures and deckhouses
15	Bulkheads
16	Tank arrangement plan
17	Rudder body
18	Rudder stock
19	Rudder bearings, pintles and couplings etc.
20	Large openings
21	Special foundations
22	Welded joints for steel or aluminium
23	Coating plan
24	NDT-plan (Non-Destructive-Testing)
25	Equipment number and anchoring equipment
26	Mooring equipment
	Supporting Calculations (Structure)
27	Design loads summarized in a load plan
28	Distribution of still water shear forces and bending moments
29	Longitudinal strength calculation
30	Geometry properties of significant hull girder cross sections
31	Local stress calculations, if applicable
32	Finite element analysis, if applicable
33	Fatigue stress calculations, if applicable
34	Shock calculations, if applicable
35	Residual strength , if applicable
	Safety Requirements for the Hull
36	Closing appliances
37	Information to calculation of freeboard, if applicable
38	Bulwarks and guard-rails
39	General stability information
40	Intact stability calculations
41	Damage stability calculations
42	Damage control plan
43	Inclining test, report and evaluation
44	Structural fire protection
45	Documentation on storage rooms and transport lines for explosives (ammunition, missiles, etc.)
46	Masts including stays, if any
47	Specification of further equipment

SECTION 2

SUBDIVISION AND STABILITY

A. General

1. Application

The requirements of this Section apply to monohull naval surface ships.

High Speed Craft and Hydrofoil Craft are covered by the TL Rules, Chapter 7 - High Speed Craft.

For other types of ships special requirements will be agreed with TL case by case.

2. Classification

2.1 Naval ships will be assigned Class only after it has been demonstrated that their intact stability is adequate for the service intended. The level of intact stability for naval ships shall generally meet the standard defined in the following, unless special operational restrictions reflected in the Class Notation allow a smaller level.

The Naval Authority may require compliance with other existing standards, regarding intact stability. TL reserve the right to accept such standards as equiva-lent.

2.2 Naval ships with proven subdivision and damage stability will be assigned the symbol. This symbol will be supplemented by a damage stability marking, kind of stability assessment and regulations applied, see C. and also Chapter 101 - Classification and Surveys (Naval Ship Technology), Section 2, B.3. and C.2.2

3. Documents to be submitted

The drawings and documents necessary for approval are defined in Section 1, D.

4. Definitions

For the purpose of this and other Sections the following definitions apply unless explicitly defined otherwise.

4.1 Down flooding point

Down flooding point means any opening through which flooding of the spaces which comprise the re-serve buoyancy could take place while the ship is in the intact or damaged condition, and heels to an angle past the angle of equilibrium.

4.2 Permeability μ.

Permeability μ of a space means the percentage of the immersed volume of that space which in case of flooding can be occupied by water.

4.3 Watertight

Watertight, in relation to a structure, means capable of preventing the passage of water through the structure in any direction under the head of water likely to occur in the intact or damaged condition.

4.4 Weathertight

Weathertight means that water will not penetrate into the ship in any sea condition.

5. Anti-heeling devices

5.1 If tanks are used as anti-heeling devices, effects of maximum possible tank moments on intact stability are to be checked. A respective proof has to be carried out for several draughts and taking maximum allowable centres of gravity resulting from the stability limit curve as a basis.

5.2 If a ship is equipped with anti-heeling arrangements which may counteract heeling angles of more than 10°, the requirements defined in Chapter 107 - Ship Operation Installations and Auxiliary Systems, Section 8, Q. have to be observed.

5.3 All devices have to comply with Chapter 105 Electrical Installations, Section 7, G.

B. Intact Stability

1. Buoyancy

1.1 All naval ships shall have a sufficient reserve

of buoyancy at the design waterline to meet the intact stability requirements of this Section. This buoyancy reserve shall be calculated by including only those compartments which are:

1.1.1 Watertight

1.1.2 Accepted as having scantlings and arrangements adequate to maintain their watertight integrity

1.1.3 Situated in locations below a boundary, which may be a watertight deck or equivalent structure of a non-watertight deck covered by a weathertight structure as defined in A.4.4.

1.2 Arrangements shall be provided for checking the watertight integrity of those compartments taken into account in 1.1.1.

1.3 Where entry of water into spaces above the boundary as defined in 1.1.3 would significantly influence the stability and buoyancy of the ship, such structure shall be:

- Of adequate strength to maintain the weather tight integrity and fitted with weathertight closing appliances; or
- Provided with adequate drainage arrangements; or
- An equivalent combination of both measures.

1.4 The means of closing openings in the boundaries of weathertight structures shall be such as to maintain weathertight integrity in all operational conditions.

2. Load cases for stability considerations

2.1 General

For naval ships the investigation of the basic load cases ***0, 1, 1A, 2, 2A, 5, 5A*** and ***6*** defined in the following written in bold and italics is mandatory, all other load cases defined herein are not mandatory, but can be regarded as a guideline for further investigations.

For ships with unusual mass distribution and considerably differing heeling moments other or additional load cases should be agreed with the Naval Authority.

A summary of the different load cases is given in Table 2.1.

For naval ships with important supply functions, the special load distribution of the supply goods or liquids requires a loading and unloading manual, considering stability as well as structural strength.

2.2 Load case 0: Light Ship Displacement

The condition ***0 "Light Ship Displacement"*** means a displacement according to the heeling test, including a design and construction margin, including fillings of liquids in all machinery systems, weapons and sensors, filling of sonar domes and fixed ballast, if applicable.

This load case considers in addition the specified crew and their personal blongings, but does not include any provisions, aircraft, etc., see Table 2.1.

2.3 Load case 0V: Warping Displacement

The condition 0V "Warping Displacement" is based on the ***"Light Ship Displacement"***, but includes fillings of ballast water and fuels in tanks as far as they are necessary for stability and trim during warping or docking operations.

2.4 Load case 1: Limit Displacement

The condition ***1 "Limit Displacement"*** is an unfavourable loading condition, where stability must be sufficient for the maximum wind forces acting on the ship. It is based on load case ***0,*** but ballast water tanks are filled as far as necessary and different provisions are fully or partially on board as defined in Table 2.1. Supply goods and liquids are only aboard in an extent as it is relevant for the most unfavourable load case.

2.5 Load case 1A: Limit Displacement End of Life

The condition ***1A "Limit Displacement End of Life"***

is identical to load case ***1***, but includes life cycle margins for maintenance, later conversions and equipment improvements and additions.

2.6 Load case 1B: Limit Displacement with Icing

The condition 1B "Limit Displacement with Icing" is based on the load case ***1,*** but includes icing of the ship's superstructures, see 3.4.

2.7 Load case 1AB: Limit Displacement End of Life with Icing

The condition 1AB "Limit Displacement End of Life with Icing" is identical to load case ***1A,*** but includes icing of the ship's superstructure according to 3.4.

2.8 Load case 2: Combat Displacement

The condition ***2 "Combat Displacement"*** is equivalent to the design displacement. It is based on load case ***0,*** but includes loading of all provisions at 100 % and does not provide for waste water or ballast water aboard, see Table 2.1.

2.9 Load case 2A: Combat Displacement End of Life

The condition ***2A "Combat Displacement End of Life"*** is identical to load case ***2,*** but includes life cycle margins for maintenance, later conversions and equipment improvements and additions.

2.10 Load case 2B: Combat Displacement with Icing

The condition 2B "Combat Displacement with Icing" is based on load case ***2,*** but includes icing of the ship's superstructures according to 3.4.

2.11 Load case 2AB: Combat Displacement End of Life with Icing

The condition 2AB "Combat Displacement End of Life with Icing" is identical to load case ***2A,*** but includes icing of the ship's structure according to 3.4.

2.12 Load case 3: Medium Displacement

The condition 3 "Medium Displacement" is mostly relevant for boats and auxiliary units. It is based on load condition ***0,*** but includes life cycle margins for maintenance, later conversions and equipment improvements and additions as well as a partial content of provisions as defined in Table 2.1. Ballast water is only aboard as far as necessary for stability.

2.13 Load case 4: Special Limit Displacement

The condition 4 "Special Limit Displacement" is based on load case ***1***, but includes additional loading which may become necessary for carrying out exceptional tasks, e.g.

- Transport of troops
- Transport of goods for humanitarian assistance

For such special loading conditions the requirements defined herein are still applicable.

It is within the responsibility of the Naval Authority to make allowance for extreme loading scenarios in case of severe situations (crisis/wartime). TL may assist in the evaluation of such scenarios in which a defined deviation of the stability standard occurs.

2.14 Load case 4A: Special Limit Displacement End of Life

The condition 4A "Special Limit Displacement End of Life" is identical to load case 4, but includes life cycle margins for maintenance, later conversions, equipment improvements and additions.

2.15 Load case 4AB: Special Limit Displacement End of Life with Icing

The condition 4AB "Special Limit Displacement End of Life with Icing" is identical to load case 4A, but includes icing of the ship's superstructure according to 3.4.

2.16 Load case 5A: Special Combat Displacement

The condition **5 *"Special Combat Displacement"* is** based on load case ***2,*** but includes fuels as far as necessary for stability and at least 10 % filling, see Table 2.1. The additional special loads have the same characteristics as for load case 4, but in percentage of loading as to be agreed with the Naval Authority.

2.17 Load case 5A: Special Combat Displacement End of Life

The condition ***5A "Special Combat Displacement End of Life"*** is identical to load case ***5***, but including life cycle margins for maintenance, later conversions, equipment improvements and additions.

2.18 Load case 5AB: Special Combat Displacement End of Life with Icing

The condition 5AB "Special Limit Displacement End of Life with Icing" is identical to load case ***5A,*** but includes icing of the ship's superstructure according to 3.4.

2.19 Load case 6: Maximum Displacement

The condition ***6 "Maximum Displacement"*** is identical to load case ***2A*** with an increase of displacement of 2%.

2.20 Load case 6B: Maximum Displacement with Icing

The condition **6B "Maximum Displacement with Icing"** is identical to load case ***6***, but includes icing of the ship's superstructure according to 3.4.

3. Assumptions for computation

3.1 Displacement

The displacement shall be computed in metric tons [t] (1 000 kg). The density of the seawater shall be assumed as 1,025 t/m^3.

3.2 Load assumptions

The assumptions for loads such as

- Weight of crew including the personal effects
- Provisions
- Density of fuels, lubricants, waste water, etc.
- Special heeling influences

have to be agreed with the Naval Authority.

Note:
If no other information is available, the following densities of liquids may be used:

-	*freshwater*	*1.000*	*t/m^3*
-	*bilge water*	*1,005*	*t/m^3*
-	*waste water*	*1,050*	*t/m^3*
-	*ship's fuel (diesel)*	*0,83*	*t/m^3*
-	*aircraft fuel*	*0,81*	*t/m^3*
-	*lubricants*	*0,90*	*t/m^3*
-	*fire extinguishing foams*	*1,15*	*t/m^3*

3.3 Displacement margins

The following margins for the determination of the final displacement and the centres of gravity have to be considered carefully within the ranges to be defined by the shipyard and the Naval Authority:

- Design margin for uncertainties in true weights during design phase
- Construction margin for tolerances of the construction material and because of detail design changes
- Maintenance margin for continued corrosion protection, (additional coatings), etc.
- Margin for later conversions and equipment improvements/additions, if applicable

3.4 Icing

For the load cases which include icing, icing has to be assumed up to a height of 20 m above waterline.

Note:
The additional weight may be estimated for:

- *free deck areas and front areas of superstructure and deckhouse:*
  0,5 kN/m²
- *projected front areas of weapons, sensors, boats, masts and rigging, etc.:*
  1,0 kN/m²
- *free standing top masts, stays and antennas with a diameter below 0,1 m:*
  0,1 kN/m

For the estimation of the lateral wind attack area icing can be neglected. For the evaluation of the centre of gravity sheer and camber of the deck beams shall be considered approximately.

Table 2.1 Summary of load cases (basic load cases are written in italics)

Load cases →	0	OV	1/1A/1B/1AB	2/2A/2B/2AB	3	4/4A/ 4AB	5/5A/ 5AB	6/6B
	Light Ship Displ.	**Warping Displace-ment**	**Limit Displacement**	**Combat Displacement**	**Medium Displace-ment**	**Special Limit Displ.**	**Special Combat Displ.**	**Maximum Displ.**
Loads↓	All values are percentages of the specific max. possible load [%]							
Empty Ship with mach. systems filled	100	100	100	100	100	100	100	100
Crew with personal effects	100	100	100	100	100	100	100	100
Consumables / provisions	-	-	50/33	100	50	50/33	100	100
Fresh water	-	-	10/50 **(1)**	100	50	10/50 **(1)**	100	100
Waste water	-	-	50	-	50	50	-	-
Ship fuel	-	**(2)**	10	100	50	≥ 10	100	100
Aircraft fuel	-	-	10	100	-	≥10	100	100
Lubrications	-	-	50	100	100	50	100	100
Fire exting. foams	-	-	100	100	100	100	100	100
Ammunition	-	-	33	100	-	33	100	100
Aircraft (stowed)	-	-	100	100	-	100	100	100
Special loads	-	-	-	-	-	100	100	100
Supplies / transports	-	-		100	**(3)**	**(3)**	100	100
Ballast water	-	**(2)**	**(2)**	**(3)**	**(2)**	**(2)**	**(2)**	**(2)**

(1) *50 % of freshwater if 30 l/day/crew member can be produced*
(2) *as far as necessary for stability*
(3) *supply goods and liquids according to the most unfavorable load condition*

4. Righting lever

4.1 The levers of the righting moments have to be calculated for ship spaces which are closed watertight. Such spaces are the ship's hull up to the bulkhead deck and the superstructures and deckhouses, which can be closed watertight at sea. If the spaces above bulkhead deck do not exceed a length of 0,05 **L**, they shall not be included in this volume.

4.2 A righting lever h is defined as follows:

h = righting moment [mt]/displacement [t] [m]

The righting levers have to be evaluated for the following conditions:

- h_{SW} for the ship in still water
- h_C for the ship in the wave crest condition
- h_T for the ship in the wave trough condition
- h_{WV} for the ship in the seaway, average value of wave crest and wave trough conditions

and for the basic load cases defined above. For these load cases the righting levers and other form parameters have to be determined for the ship at even keel condition. The computation of the cross-curves of stability shall be done under the assumption that the total watertight space including superstructures and deckhouses is kept constant. For further information, see E.

5. Heeling levers

5.1 The heeling lever is defined as follows:

k = heeling moment [mt] / displacement [t] [m]

The heeling levers are to be determined for heeling angles φ> of 10°, 20°, 30°, 45°, 60° and 75°. The different heeling influences are summarized in the following. If these influences occur at the same time the actual lever values are to be added.

5.2 Free liquid surfaces

The contribution of free liquid surfaces to the heeling moment results in the following heeling lever k_F:

$$k_F = \frac{1}{\Delta} \cdot \sum \left(p_i \cdot b_{\varphi i} \right) \; [m]$$

p_i = mass of liquids in slack tank i with free liquid surfaces [t]

$b_{\varphi i}$ = change of the centre of gravity in relation to the upright ship, measured parallel to the design water line [m]

5.3 Turning circle

The heeling lever k_D is to be determined as follows: With known radius of the turning circle:

$$k_D = v_D^2 \frac{KG - 0{,}5 \cdot T}{g \cdot R_D} \cdot \cos\varphi \; [m]$$

With unknown radius of turning circle:

$$k_D = \frac{c_D \cdot v_{max}{}^2 \left(KG - 0{,}5 \cdot T \right)}{g \cdot L} \cdot \cos\varphi \; [m]$$

v_D = average speed in the tactical turning circle (180°), but not less than 0,8 v_0 [m/s]

v_{max} = see Section 1, B.7.2

KG = centre of gravity above baseline [m]

R_D = radius of tactical turning circle (180°)

c_D = coefficient for computation of turning circle

= 0,3, final value to be determined from sea trials

φ = heeling angle [°]

g = acceleration of gravity

= 9,81 [m/s^2]

5.4 Wind

The heeling lever k_W caused by lateral wind pressure is

to be determined as follows:

$$k_W = \frac{A_W \left(A_{W\Theta H} - 0{,}5 \cdot T\right)}{\Delta \cdot g} \cdot p_w \cdot \left(0{,}25 + 0{,}75 \cdot \cos^3 \varphi\right) [m]$$

A_W = lateral area of the ship exposed to wind forces, including all superstructures, deckhouses, masts, weapons, sensors, etc. but without consideration of an icing layer, [m²]

$A_{W\Theta H}$ = vertical distance of the centre of the area A_W above baseline [m]

p_W = wind pressure [kN/m²]

$= c_w \cdot v_w^2 \cdot \frac{\rho}{2}$,

= 0,30 for load cases 0 and 125

c_W = drag coefficient

= 0,60 for cylinders

= 1,00 for flat areas

= 1,70 for flat grid elements

= 1,30 for cylindrical grid elements

v_w = wind speed [m/s]

ρ = density of air [t/m³]

The direction of this heeling force shall be the most unfavourable direction in combination with the other heeling forces.

A proposal for the wind speeds to be used for computation of the heeling levers for the different load cases and unrestricted range of service is given in Table 2.3. The values used for this range and restricted service ranges will be decided finally after discussion with the Naval Authority.

Table 2.2 Wind pressure for different wind speeds based on c_W = 1,20

Wind speed		Wind pressure
[kn]	[m/s]	[kN/m²]
90	46	1,50
80	41	1,25
70	36	1,00
60	31	0,75
50	26	0,50
40	21	0,30
30	15	0,20
20	10	0,10
Intermediate values can be found by linear interpolation.		

5.5 Replenishment at sea

Heeling levers caused by lateral forces due to replenishment at sea have to be considered if

$$\frac{\sum Z_i \cdot a_i}{\Delta \cdot g} > 0{,}05 \text{ m}$$

The heeling lever k_Q is to be determined as follows:

$$k_Q = \frac{\sum Z_i \left(a_i \cdot \cos\varphi - b_i \cdot \sin\varphi\right)}{\Delta \cdot g} [m]$$

Z_i = 3x nominal towing force at the transfer winch for the track rope [kN]

a_i = vertical distance of the track rope fixing point above 0,5 · **T** [m]

b_i = horizontal distance between the centreline and the track rope fixing point [m]

φ = angle of heel [°]

The summation is to be carried out for all replenishment systems working at one ship's side at the same time.

5.6 Towing forces

If the naval surface ship can also be used for towing and warping duties the heeling lever kT created by the pulling force on the towing line has to be considered.

5.7 Other heeling influences

In exceptional situations additional significant heeling influence with a lever k_P may occur, e.g. caused by crane operations or accumulation of persons at one ship side, etc. Such influence has to be considered in the overall balance. Attention has to be paid to the fact that not all heeling components may occur at the same time.

6. Criteria for intact stability

6.1 Proof of stability

The proof of sufficient stability for a naval ship fulfillİng its operational tasks at the conditions defined by the Naval Authority shall be done by comparison of the righting levers with the heeling levers. Possible combinations are summarized in Table 2.4. Decisive are the size of the remaining righting lever and of the static angle of heel, see Fig. 2.1

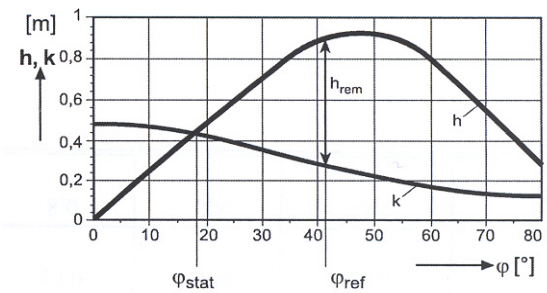

Fig. 2.1 Lever arm curves

6.2 Required righting levers

The minimum righting lever is related to a certain angle of heel and will be measured at the relevant angle of reference. The reference angle of heel is to be defined as follows:

$$\varphi_{ref} = 2 \cdot \varphi_{stat} + 5 \quad [°]$$

The remaining righting lever h_{rem} is the difference between the sum of the righting levers h and the heeling levers k, see Fig. 2.1. This relation has to be investigated for the load cases defined above as well as for any special load cases defined by the Naval Authority and the angles of heel defined in 6.3.

For all load cases the following values of the remaining righting levers h_{rem} have to be complied with:

- angle of heel $\varphi_{stat} \leq 15°$,
  remaining righting lever
  $h_{rem} \geq 0{,}1$ m at $\varphi_{ref} = 35°$

- angle of heel $\varphi_{stat} > 15°$,
  $h_{rem} \geq 0{,}01 \text{ m} \cdot (\varphi_{stat} - 5°)$ [m] at φ_{ref}

For the load cases 1B, 1AB, 2B, 4AB, 5AB and 6B the maximum wind speed where the requirement of h_{rem} is complied with has to be evaluated. In general the evaluated wind speed shall not be less than 60 kn for unrestricted service and 40 kn for restricted service. The evaluated values have to be included in the stability documentation.

6.3 Maximum angles of heel

The static angle of heel φ_{stat} shall not exceed the values defined in Table 2.3.

Tablo 2.3 Static angle of heel for different wind speeds

Wind speed [kn]	40	70	90
Angle of heel φ_{stat} [°]	15	20	25

The static angle of heel φ_{stat} during turning circle manoeuvres shall not exceed 15° for wind speeds up to 40 kn.

The maximum permissible speed of entrance into the turning circle has to be stated in the stability documentation.

For load cases with icing the static angle of heel shall not exceed 25°.

If these limit values cannot be achieved, necessary measures have to be discussed and agreed with TL and the Naval Authority.

6.4 Maximum draught

The maximum draught **T** is the draught permissible with regard to strength and stability requirements. It refers to the load case ***2A "Combat Displacement End of Life"*** plus a certain percentage of this displacement to be defined by the Naval Authority.

This maximum draught shall be clearly marked on both hull sides of the naval ship at **L**/2, see G.

7. Intact stability of special ship types

For special ship types the standard defined above may not be sufficiently applicable. In such cases the Naval Authority shall decide about the stability requirements to be applied. TL may assist in the stability evaluation based on such requirements.

C. Subdivision and Damage Stability

1. Definition of subdivision status

Ships which meet the requirements of this Section will be assigned the symbol for complying with damage stability criteria, see Chapter 101 - Classification and Surveys (Naval Ship Technology), Section 2, C.3.

2. Design principles

To improve survivability of the naval ship in case of damage, the following design principles shall be applied:

2.1 Bulkhead decks

2.1.1 All penetrations through the bulkhead deck have to be designed to maintain the watertight integrity of the bulkhead deck.

2.1.2 Progressive flooding of intact watertight compartments over the bulkhead deck has to be prevented by dam up water in watertight areas on the bulkhead deck.

Watertight wing bulkheads in combination with sills are forming the boundaries of these watertight areas. These areas have to be defined according to the final floating position of the ship and must fulfil the condition, that the lower edge of the watertight area must be located 0,5 m above the final floating position of the ship considering heel and trim, see Fig. 2.2. The heeling levers k_F and k_W (40 kn) have to be considered.

2.2 External watertightness

2.2.1 The external water tightness of the naval ship is limited up to the flooding line at the heeling angle φ = ± 60° considering the actual trim.

2.2.2 Openings in the hull, superstructure and deck houses as well as in decks forming the outer boundary of the buoyant body are to be provided with closing appliances.

Watertight doors and openings for penetration of cables, piping, ventilation ducts, etc. located below the bulkhead deck are to be designed for a pressure of 70 kN/m^2. If they are located above the bulkhead deck the design pressure is 40 kN/ m^2. The design of the closing appliances has to be approved by TL.

2.2.3 The damage stability calculation is to be based only on the compartments of the hull, the superstructures and deckhouses which are enclosed watertight.

2.3 Watertight subdivision

2.3.1 Transverse bulkheads

2.3.1.1 The ship has to be divided up to the bulkhead deck by transverse bulkheads in a way that the requirements for sufficient damage stability are fulfilled. The watertight bulkheads must be able to withstand the loads from the water pressure in a case of damage.

2.3.1.2 A collision bulkhead shall be located at a distance of at least 5 % **L** from the forward perpendicular. No openings are permitted in the collision bulkhead. Deviations due to special operational requirements have to be approved by TL

Table 2.4 Summary of righting and heeling levers to be calculated

Load cases		Ship in still water		Ship in the seaway	
		Righting lever	Heeling lever	Righting lever	Heeling lever
0 0V	Light ship Warping	h_{SW}	$k_F + k_w$ (40) **(1)**	-	-
1,1A, 1B, 1AB ***2, 2A***, 2B, 2AB 4, 4A, 4AB, *5* , ***5AB,*** 5AB ***6,*** 6B	Limit Combat Special limit Special combat Maximum	h_{SW}	$k_F + k_w$(40) **(1)** + k_D	-	-
1,1A, 1B, 1AB ***2, 2A,*** 2B, 2AB 4, 4A, 4AB **5, *5A***, 5AB ***6***, 6B	Limit Combat Special limit Special combat Maximum	-	-	h_T,h_c,h_{WV}**(2)**	$k_F + F_W$ (90) **(1)** $k_F + k_w$ (70) **(1)** $k_F + k_w$(40) **(1)**
3	Medium	h_{SW}	$k_F + k_w$(20) **(1)** + k_D $k_F + k_w$(20) **(1)** + k_P	-	-
All load cases except ***0***, 0V	Turning circle	h_{SW}	$k_F + k_w$(40)**(1)** + k_D $k_F + k_w$(20) **(3)** + k_D	-	-
All load cases except ***0***, 0V	Towing forces	h_{SW}	$k_F + k_w$(40) **(1)**+ k_T	-	-
All load cases except ***0***, 0V	Replenishment at sea	h_{SW}	$k_F + k_w$(40) **(1)**+ k_Q**(4)**	-	-

(1) *the value in brackets represents the proposed wind speed [kn] for naval ships with unrestricted range of service (for requirements for maximum static heeling see Table 2.3)*
(2) *the more unfavourable value of h_T and h_c has to be used*
(3) *only for boats with restricted service range*
(4) *heeling during this operation shall not exceed 6°*

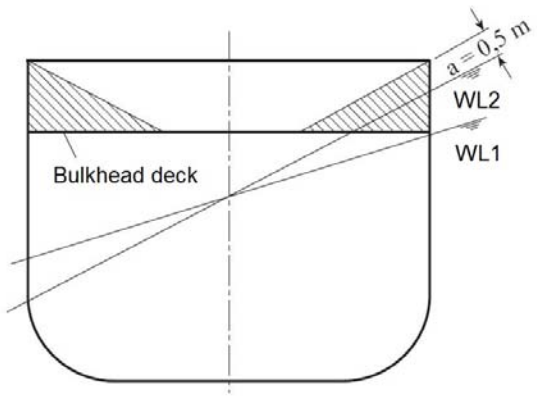

WL1 Equilibrium floating condition
WL2 Floating condition considering wind and free surface
Watertight area above the bulkhead deck

Fig. 2.2 Cross section at a watertight bulkhead

2.3.1.3 The number of openings in watertight bulkheads shall be reduced to the minimum compatible with the design and proper working of the ship. For the necessary openings hydraulic or electric closing systems are to be provided, which have to be approved by TL.

2.3.1.4 Openings for doors and other purposes have to be located in the midship area, and in no case shall the outboard edge of such openings be situated at a distance from the shell plating which is less than 0,2 **B** measured at right angles to the centreline at the level of the maximum draught.

2.3.1.5 Bulkhead doors have to comply with Section 9,B.

2.3.2 Longitudinal bulkheads

2.3.2.1 To avoid extreme heeling angles due to asymmetrical flooding in case of damage the number and extent of longitudinal bulkheads has to be restricted to a minimum.

2.3.2.2 Cross-flooding arrangements

Where the damage stability calculation requires the installation of cross-flooding arrangements to minimize asymmetrical flooding, these arrangements shall be self-acting as far as possible. Non-automatic controls for cross flooding fittings are to be capable of being operated from the bridge or another central location. The position of each closing device has to be indicated on the bridge or the central operating location.

Particular attention has to be paid to cross-flooding arrangements upon the stability in intermediate stages of flooding.

The sectional area of the cross flooding pipes is to be determined in such a way that the time for complete equalization does not exceed 15 minutes:

$$A = \frac{Q}{c \cdot v \cdot t} \; [m^2]$$

A = cross section of pipes [m^2]

Q = volume of the space (tank) to be flooded [m^3]

c = friction coefficient

≈ 0,6

v = flow velocity [m/s]

$= \sqrt{2 \cdot g \cdot h}$

h = pressure head between the highest point of cross flooding pipe and the floating water-line [m]

t = flooding time [s]

= ≤900s

When determining the bulkhead scantlings of tanks connected by cross flooding arrangements, the increase in pressure head at the immersed side that may occur at maximum heeling in the damaged condition must be taken into account.

2.3.3 Progressive flooding between compartments through damaged pipes with diameters > 50 mm has to be prevented.

2.3.4 Ammunition storage and refrigerating rooms as well as missile shafts have to be closed watertight.

3. Extent of damage

3.1 Compartment length

The minimum distance between adjacent watertight bulkheads forming a compartment shall be 1,8 m. Otherwise the compartment shall be combined with the adjacent compartment for stability considerations.

3.2 Longitudinal extent of damage

3.2.1 Load cases *1* and *2*

For the load cases ***1*** and ***2*** the longitudinal extent of damage ℓ is defined as follows:

- For ships with a length **L** < 30 m only one compartment shall be assumed as flooded

- For ships with a length **L** ≥ 30 m the longitudinal extent of damage is

  ℓ = 0,18· **L**-3,6 or
  18 m whichever is less

- The longitudinal extent of damage is related to the moulded side of plane bulkheads. Between corrugated bulkheads or bulkheads with steps or recesses the minimum distance in between is decisive.

3.2.2 Load cases *4* and 5

For the load cases **4, 4A, 5** and ***5A*** the number of flooded compartments can be reduced by one, but the minimum will be one compartment flooded. Further

details have to be agreed between the Naval Authority and TL.

3.3 Penetration depth

It is assumed that the depth of damage reaches the centreline of the ship. A central longitudinal bulkhead is to be considered always as undamaged. Longitudinal bulkheads are to be assumed undamaged only if this would lead to a more unfavourable stability situation.

For ships with double hulls the assumptions have to be agreed case by case with the Naval Authority and TL.

3.4 Vertical extent of damage

The vertical extent of damage is to be assumed from keel upwards without any upper limit. Damages of lesser extent are to be assumed only if this would lead to a more unfavourable stability situation.

3.5 General aspects

If a longitudinal extent of damage less than defined above leads to a more unfavourable stability situation, the reduced length has to be used. If the damage requirements defined above endanger the main tasks of a naval ship, other damage assumptions may be agreed with the Naval Authority and TL.

4. Permeability of compartments

4.1 For the purpose of stability calculations the permeability μ for flooding of the different compartments is defined in Table 2.5.

Deviations from the values defined in Table 2.5 have to be demonstrated to TL. For holds partially filled with military cargo the permeability is to be modified in proportion to the height of flooding of the space.

4.2 For naval craft built from wood or composite material, the volume of the construction elements has to be calculated and the permeability values of Table 2.5 have to be reduced accordingly.

4.3 The surface permeability of tanks bunkers and cells have to be assumed 98 %. For other spaces the values for the surface permeability are equivalent to the volume permeability of Table 2.5.

5. Righting lever

The stability calculation for the damaged ship has to determine the remaining righting lever according to the method of "loss of buoyancy" for still water conditions.

6. Heeling levers

For the damaged ship the following heeling levers have to be considered.

6.1 Free liquid surfaces

The heeling lever k_F has to be calculated for the free surfaces in the undamaged part of the ship.

Table 2.5 Values of volume permeability

Definition of spaces	Permeability μ [%]
Combat information center, control stations, accommodation rooms, kitchens, pantries, workshops	95
Ammunition rooms, missile silos	80
Provision rooms, refrigerating holds Full/half full/empty	50/65/80
Spare part storages	80
Machinery and ventilation rooms	85
Tanks, bunkers, cells	98
Void spaces	98
Supply storages, cargo holds for military goods to be transported	To be determined case by case

6.2 Wind

The wind speed has to be assumed at 40 kn (for unrestricted range of service). For the calculation of the lateral area above waterline and its centre of gravity the average of fore and aft draught has to be used.

7. Criteria for damage stability

7.1 General

To maintain a minimum level of safety the naval ship shall withstand the defined damages. This has to be proven by investigation of all damage cases according to 5 and 6 in combination with the load cases ***1A "Limit Displacement End of Life"*** and ***2A "Combat Displacement End of Life".*** In a first step the righting lever in still water h_{SW} has to be compared with the heeling lever for free surfaces k_F. Then the heeling lever k_W for a wind speed of 40 kn has to be added to the heeling lever k_F. For the load cases **4, 4A, 5, *5A*** and ***6*** sufficient damage stability has to be demonstrated for the most unfavourable case of damage and a longitudinal extent of damage according to 3.2.

Damage stability will be considered sufficient if the conditions according to 7.2 to 7.4 are fulfilled.

7.2 Criteria in damage condition without wind

In the damage condition without wind the following criteria have to be met:

- If flooding is symmetrical the ship must float upright in the final floating position, that means that GM must not be negative

- In the final floating position the bulkhead deck must not immerse considering heel and trim as well as symmetrical or asymmetrical flooding

- For the intermediate stages of flooding a maximum heeling angle of φ = 25° is permitted; a remaining righting lever h_{rem} of at least 0,05 m has to be achieved in the range up to φ = 40°

7.3 Criteria in damage condition with wind

In the damage condition with wind the following criteria have to be met:

- Openings connected to intact compartments must not immerse

- The angle of heel must not be greater than 25° in the final floating condition; in this condition a remaining righting lever h_{rem} ≥ 0,05 m must be ensured

- at least at the situation of immersing of non-watertight openings a remaining righting lever h_{rem} ≥ 0,05 m must be ensured

- the remaining righting lever curve shall have a minimum range of 15° beyond the point of intersection of the h_{SW}/k_W (40 kn) curves up to the immersion of non-watertight openings

D. Tests

1. General

1.1 A practical test with the empty naval ship ready for operation (according to load case ***0*** in B.2.) has to be executed for newbuildings as well as for naval ships which have passed a major conversion.

1.2 If an identical series of naval ships is built at one shipyard, the tests have to be executed only with the first ship. If the identical ships are built at different shipyards, the tests have to be performed with the first ship at each shipyard.

1.3 The tests have to be executed in presence of a TL Surveyor.

2. Inclining test

2.1 Purpose of test

The inclining test has to be executed to determine the centre of gravity of the empty ship ready for operation (load case ***0)*** and provides therefore a basis for the stability considerations described above.

2.2 Test conditions

The following conditions have to be applied:

- Draught readings have to be taken at the fore, mid and aft location on port- and starboard side and have to be well documented (incl. longitudinal locations).

- test to be executed in calm water with sufficient depth, wind speed less than 3 Bft

- The specific gravity of the water and weather the conditions have to be documented.

- All tanks, cells, etc. shall be completely empty to avoid the influence of free surfaces.

- The valves of all pipe systems shall be closed.

- An initial heeling angle of the ship of more than 1° has to be compensated with extra ballast.

- The heeling weight shall be located at the weather deck at half ship length. The positions to which the weight is shifted have to be documented.

- The amount of the weights has to be chosen for heeling the ship between 1 and 2 ° to each side.

  The differences between measurements with the same weight should not exceed 4'=1/15°

- To avoid deviations in the evaluation of the lightship data, the summation of missing and additional weights during inclination, shall not exceed 4 % of the theoretical displacement at this test condition.

- The missing and additional weights have to be documented including their centres of gravity.

- The angle of heel has to be measured with two calibrated inclinometers, which are able to recognise also the 0° position. A pendulum should be used for plausibility checks.

E. Guidelines for Computation

1. Computation of the cross curves

1.1 The hydrostatic data for the ship's form in untrimmed condition have to be evaluated using a well proven computer program. The reference values for the computation, like basis, **L**, etc. have to be defined. The output has to be presented in form of lists and graphs.

1.2 Ship in still water

For the calculation of the still water cross curves all spaces which can be closed watertight may be considered. Cross curves (KN) have to be calculated with free trim and sinkage at the angles of heel φ = 10°, 20°, 30°, 45°, 60° and 75°. At least the range of displacement from ***"Empty Ship"*** **to** ***"Special Combat"*** has to be included in the computation. General definitions, see Section 1, Fig.1.1, a sketch showing which superstructures and deckhouses are included, as well as the information "deck edge immersion" have to be added.

1.3 Ship in seaway

For the same watertight spaces of the ship the seaway cross curves of stability, considering the angles of heel and range of displacement as defined in 1.2, have to be evaluated.

The ship has to be assumed as stationary laying in a sinusoidal wave with a length λ equal to **L** and a height of

$$H = \frac{\lambda}{(10 + 0{,}05 \cdot \lambda)}$$

The wave crest/though shall be located at the cross section with the maximum area.

For the computation of the cross curves the ship has to be assumed with no trim. The cross curves have to be evaluated for:

- Wave crest situation (h_c)

- Wave trough situation (h_T)

- Mean righting lever curve determined from h_c and h_T

The length λ and height H of the wave as well as a sketch showing which superstructures and deckhouses are included, have to be documented.

2. Evaluation of an equivalent safety level

If a single criterion for stability cannot be met, it is

possible to discuss the situation with TL and the Naval Authority concerning the use of methods showing an equivalent safety level.

F. Stability Information

1. Stability manual

For each naval ship a stability manual has to be provided. This book shall contain:

- Results of the intact and damage stability investigations
- Comment to stability behaviour of the ship
- Measures to maintain sufficient stability for the intact as well as the damaged ship

2. Damage control plan

2.1 The damage control plan shall be permanently exhibited or readily available on the navigating bridge and/or ship control centre, for the guidance of the officers in control of the naval ship. This plan shall show clearly:

- For each deck and compartment the boundaries of the watertight compartments, the openings therein with the means of closure and position of any controls thereof
- For doors, a description of degree of tightness, operating mode, normal position, operating circumstances (opened while at sea, not normally used while at sea, not used while at sea)
- Arrangements for the correction of any list due to flooding

2.2 General information shall be given by listing operational procedures in order to maintain the watertight integrity under any condition.

3. Stability computer

If a stability computer is installed aboard, a stability manual and a damage control plan have also to be provided.

G. Marking of Maximum Draught

The maximum draught shall be clearly marked amid ships on both sides corresponding to the maximum draught permissible with regard to strength and stability or the International Load Line Convention where compliance is requested.

Fig. 2.3 Example of marking for a naval ship

SECTION 3

MATERIALS AND CORROSION PROTECTION

A. General

1. All materials to be used for the structural members mentioned in these Rules are to be in accordance with the TL Rules Chapter 2 Material and Chapter 3 Welding with TL Rules Chapter 103 - Special Materials for Naval Ships. The properties of which deviate from these rule requirements, may only be used upon special approval.

In Table 3.1 the usually applied steels for hull, superstructures and deckhouses are summarized. The usually applied aluminium alloys are defined in Tables 3.5 and 3.6.

2. The materials fibre reinforced plastics and wood will be considered only on special request.

3. The drawings submitted for approval shall contain the material specification for the structural members. These drawings are to be kept on board in case any repairs are to be carried out

4. Definitions

Throughout this Chapter the following definitions of material properties apply:

R_{eH} = upper yield stress [N/mm^2]

$R_{p0,2}$= 0,2% proof stress [N/mm^2]

R_m = tensile strength [N/mm^2]

E = modulus of elasticity [N/mm^2]

B. Hull Structural Steel

1. Normal strength hull structural steel

Normal strength hull structural steel is a hull structural steel with a minimum yield stress R_{eH} of 235 N/mm^2 and a tensile strength R_m of 400-520 N/mm^2.

Normal strength hull structural steel is grouped into four grades, which differ from each other in their toughness properties, see Table 3.1. For the application of the individual grades for the hull structural members, see 5. and Table 3.3

2. Higher strength hull structural steels

2.1 Higher strength hull structural steel is a hull structural steel, the yield and tensile properties of which exceed those of normal strength hull structural steel. According to the TL Rules Chapter 2 Material, for three groups of higher strength hull structural steels the minimum yield stress R_{eH} has been fixed at 315, 355 and 390 N/mm^2 respectively.

Note:
Especially when higher strength hull structural steels are used, limitation of permissible stresses due to buckling and fatigue strength criteria may be required.

2.2 Higher strength hull structural steel is grouped into the following grades, which differ from each other in their toughness properties, see Table 3.1.

In Table 3.3 the grades of the higher strength hull structural steels are marked by the letter "H".

2.3 Where structural members are completely or partly made from higher strength hull structural steel, a suitable notation will be entered into the ship's certificate.

3. High strength hull structural steels

For elements of the hull structure, where especially high strength properties are required, quenched and tempered hull structural steel may be used, as defined in the TL Rules, Chapter 2- Materials, Section 3- Steel Plates, Strips, Section and Bars, D.

In addition steels with the material numbers 1.6780 and 1.6782 are defined in TL Rules, Chapter 103 - Special Materials for Naval Ships, Section 2, A., see also Table 3.1.

4. Austenitic steels

4.1 The non-magnetizable steels defined in Table 3.1 show attributes which are very favourable for naval ships. The material with the number 1.3964 is extremely resistant against corrosion caused by sea-water. It can also be used to manufacture non-magnetizable anchor chain cables and related accessories for naval ships.

Further details on materials and requirements are given in the TL Rules, Chapter 103 - Special Materials for Naval Ships, Section 2, B. and Section 8.

4.2 Where austenitic steels are applied having a ratio $R_{p0,2}$ / R_m ≤ 0,5, after special approval the 1 % proof stress $R_{p1,0}$ may be used for scantling purposes instead of the 0,2 % proof stress $R_{p0,2}$.

5. Material selection for the hull

5.1 Material selection for longitudinal structural members

The material selection for longitudinal hull structural members is to be carried out according to Table 3.2.

5.2 Material selection for local structural members

5.2.1 The material selection for local structural members, which are not part of the longitudinal hull structure, may in general be carried out according to Table 3.4.

5.2.2 For members not specifically mentioned, normally grade A/AH may be used. However, TL may require also higher grades depending on the stress level.

5.3 Material selection for structural members which are exposed to low temperatures

The material selection for structural members which are continuously exposed to temperatures below 0 °C will be specially considered.

6. Structural members which are stressed indirection of their thickness

6.1 Rolled materials, which are significantly stressed in direction of their thickness, have to be examined for doublings and non-metallic inclusions by ultrasonic testing.

6.2 In case of high local stresses in the thickness direction, e.g. due to shrinkage stresses in single bevel or double bevel T-joints with a large volume of weld metal, steels with guaranteed material properties in the thickness direction according to the TL Rules - Chapter 2 – Materials, Section 8 Steel and Through Properties are to be used in order to avoid lamellar tearing.

C. Forged steel and cast steel

1. General

Forged steel and cast steel for stem, stern frame, rudder post, etc. are to comply with the TL Rules, Chapter 2, Material. The tensile strength of forged steel and of cast steel is not to be less than 400 N/mm^2.

2. Components made of non-magnetizable, stainless forgings

The non-magnetizable, stainless materials 1.3914, 1.3951, 1.3952, 1.3964 and 1.3974, compare Table 3.1 and TL Rules, Chapter 103 - Special Materials for Naval Ships, Section 4, B. or equivalent may be used.

3. Components made of non-magnetizable cast steel

Where non-magnetic steel castings are required, non-magnetizable materials according to the TL Rules, Chapter 103 - Special Materials for Naval Ships, Section 5, B., e.g. 1.3940, 1.3952, 1.3955, 1.3964 or equivalent may be used.

D. Aluminium Alloys

1. General

1.1 The following requirements are based on the TL Rules, Chapter 2- Materials- Section 9, 10 - Non-Ferrous Metals, with the aim of summarizing aspects applicable for the design of naval ships.

Table 3.1 Strength properties of selected steel materials

Material	Material Number (1)	E [N/mm^2]	R_{eH} or $R_{p0,2}$ [N/mm^{2}l	R_m [N/mm^{2}l
Normal strength hull structural steel				
TL-A TL-B TL-D TL-E	1.0440 1.0442 1.0474 1.0476	2,06 x10^5	235	400 - 520
Higher strength hull structural steel				
TL-A 32 TL-D 32 TL-E 32	1.0513 1.0514 1.0515	2,06 x10^5	315	440
TL-A 36 TL-D 36 TL-E 36	1.0583 1.0584 1.0589	2,06 x10^5	355	490
TL-A 40 TL-D 40 TL-E 40	1.0532 1.0534 1.0560	2,06 x10^5	390	510
High strength hull structural steel				
TL-M550 TL-M700	1.6780 1.6782	2,00 x10^5	550 685	650 760
Austenitic steel				
X2CrNiMnMoN Nb21-16-5-3 X2CrNiMnMoN Nb23-17-6-3	1.3964 1.3974	1,95 x10^5	430 510	700 800

(1) *Defined in Key of Steels, Verlag Stahlschlüssel Wegst GmbH, D-71672 Marbach/Neckar*

Table 3.2 Material selection for longitudinal structural members

Structural member category	Material class
Secondary: Deck plating exposed to weather, in general Side plating of shell	**I**
Primary: Bottom plating, including keel plate and bilge strake Strength deck plating Continuous longitudinal members above strength deck	**II**
Special: Sheer strake at strength deck Stringer plate at strength deck Bilge strake Insert plates at ends of superstructures and deck houses and at hatch corners	**III**
Residual strength: (1) Longitudinal members relevant for residual strength	**III**
(1) *see Section 21*	

Table 3.3 Material classes and steel grades

Thickness t [mm] (1) Material class	≤ 15	> 15 ≤ 20	> 20 ≤ 25	> 25 ≤ 30	> 30 ≤ 40	> 40 ≤ 60	> 60 ≤ 100
I	A/AH	A/AH	A/AH	A/AH	B/AH	D/DH	E/EH
II	A/AH	A/AH	B/AH	D/DH	D/DH	E/EH	E/EH
III	A/AH	B/AH	D/DH	D/DH	E/EH	E/EH	E/EH
(1) *Actual thickness of the structural member*							

Table 3.4 Material classes for local structural members

Structural member	Material class
Face plates and webs of girder systems Hatch covers	**II (1)**
Rudder body, rudder horn Stern frame Propeller brackets	**II**
(1) *Class I sufficient, where rolled sections are used or the parts are machine cut from normalised plates with condition on delivery of either "normalized", "normalized rolled " or "thermo-mechanical rolled "*	

1.2 Scope

1.2.1 These requirements are applicable to products made from wrought aluminium alloys having a thickness of 2 to 50 mm inclusive. Requirements applicable to products having thicknesses outside this range are to be specially agreed with TL.

1.2.2 Alloys and material conditions which differ from the specified requirements given in Table 3.5 and 3.6, but which conform to national standards or the manufacturer's material specifications may be used provided that their properties and suitability for use, and also their weldability have been checked by and approved by TL.

1.2.3 Alloy designations and material conditions which are indicated in these Rules comply with the designations of the Aluminium Association. With regard to the definition of the material conditions the standard EN 515 is applicable.

1.3 Requirements to be met by manufacturers

Manufacturers wishing to supply products in accordance with these requirements must be approved by TL for the alloys and product forms in question.

1.4 General characteristics of products

1.4.1 The products must have a smooth surface compatible with the method of manufacture and must be free of defects liable to impair further manufacturing processes or the proposed application of the products, e.g. cracks, laps, appreciable inclusions of extraneous substances and major mechanical damage.

1.4.2 Surface defects may be repaired only by grinding provided that this is accomplished with a gentle transition to the adjacent surface of the product and that the dimensions remain within the tolerance limits. Repair by welding is not permitted. For repair purposes only tools are to be used which are exclusively applied for aluminium processing.

1.4.3 All products shall be delivered in the material conditions specified for the alloy concerned.

1.4.4 The material properties will be checked by TL on the basis of a series of tensile test specimens according to exact guidelines contained in the Rules according to 1.1.

2. Annealed work hardening alloys

2.1 Aluminium alloys of the series 5000 in 0 condition (annealed) or in H111 condition (annealed flattened) retain their original mechanical characteristics and therefore are not subject to a drop in mechaniccal strength in the welded areas.

2.2 These types of aluminium alloys are used for plates, strips and rolled sections and a representative list is defined in Table 3.5. This listing - as well as the listing of Table 3.6 - is not complete. Other aluminium alloys may be considered provided the specification (manufacture, chemical composition, temper, mechanical properties, welding, etc.) and the scope of application is submitted to TL and approved.

2.3 Unless otherwise specified, the modulus of elasticity of aluminium alloys is equal to 69000 N/mm^2 and the Poisson's ratio equal to 0,33.

3. Work hardened, restored and aged alloys

3.1 Aluminium alloys can be hardened by work hardening (series 5000 other than condition 0 or H111) or by heat treatment (series 6000).

3.2 These types of aluminium alloys are used for flat products, extruded section, bars and pipes and a representative selection is defined in Table 3.5 and Table 3.6.

4. Material selection

4.1 The choice of aluminium alloys according to Table 3.6 is mainly recommendable for extrusions and where no excessive welding will be necessary. Otherwise only the mechanical characteristics of 0 or H111 conditions can be taken into account. If higher mechanical characteristics are to be used, this must be duly justified.

4.2 In case of structures subjected to low service

temperatures (i.e. below -25° C) or intended for other particular applications, the alloys to be employed are to be agreed in each separate case by TL, who will state the acceptability requirements and conditions.

4.3 For forgings and castings to be applied, requirements for chemical composition and mechanical properties are to be defined in each separate case by TL.

5. Conversion from steel to aluminium scantlings

5.1 Where aluminium alloys, suitable for sea-water as specified in Table 3.5 and Table 3.6, are used for the construction of superstructures and deckhouses, as well as for hulls of naval craft, the conversion from steel to aluminium scantlings is to be carried out in the following way:

Where in the formulae of the following Sections R_{eH} is applied for steel, it has to be replaced by the lower value of $R_{p0,2}$ and 0,70 R_m for aluminium alloys according to Table 3.5 and Table 3.6.

5.2 When determining the buckling strength of structural elements subject to compression, the modulus of elasticity of aluminium must be taken into account. This applies accordingly to structural members for which limited shape imperfections are prescribed.

E. Reduction of the Corrosion Risk by Special Measures in Design and Construction

Naval ships, systems and components shall be designed with the aim of ensuring optimum corrosion protection through the application of suitable structural measures.

Amongst others, the following measures have proven their worth in practice:

- Points at which moisture tends to collect must be avoided as far as possible
- The structural design shall enable good accessibility for activities of active and passive corrosion protection
- Accumulations of condensed water in steel structural elements shall be avoided by providing sufficient venting possibilities
- The surface shall be as flat as possible
- Stiffeners, internal parts and piping, etc. shall be arranged in areas less at risk from corrosion
- Possibilities of performing cleaning and pickling after welding to be provided, esp. with austenitic steels
- Avoiding corrosion by impingement of drops by using baffle plates
- Chain intermittent welds only permissible in zones which are heat-insulated and free of condensed water
- Burrs and sharp edges shall be rounded off in order to improve coating
- Hollow components which are not accessible shall be sealed off completely

F. Corrosion Protection

1. General instructions

1.1 Details of the documentation necessary for setting up the corrosion protection system are laid down herein (planning, execution, supervision).

1.2 Requirements with respect to the contractors executing the work and the quality control are subject to the conditions laid down in Section 1, E.

Table 3.5 Material condition and strength properties of plates and strips made of wrought aluminium alloys (with thickness t= 3,0 to 50 mm) (1)

Alloy number	Material condition	$R_{p0,2}$ (1) [N/mm^2]	R_m (1) [N/mm^2]
TL-AW-5083 (AlMg4,5Mn0,7)	0/H111/H112	125	275
	H116	215	305
	H32	215	305
	at welded joints	125	275
TL-AW-5086 (AL Mg 4)	0/H111/H112	100	240
	H116	195	275
	H32	185	275
	at welded joints	100	240
TL-AW-5383 (AlMg 4,5Mn 0,9)	0/H111	145	290
	H321	220	305
	at welded joints	145	290
TL-AW-5754 (Al Mg 3)	0/H111/H112	80	190
	at welded joints	80	190
TL-AW-5059 (AlMg5,5Mn0,8ZnZr)	0/H111	160	330
	H116	260	360
	H321	260	360
	at welded joints	160	300

(1) *The strength properties are applicable to both longitudinal and transverse specimens*

Table 3.6 Material condition and strength properties of extruded sections, bars and pipes made of wrought aluminium alloys (with thickness t = 2,0 to 50 mm (1))

Alloy number	Material condition	$R_{p0,2}$ [N/mm^2] (1)	R_m [N/mm^2] (1)
TL-AW-5059 (AlMg 4,5Mn 0,8nZr)	T5/T6	260	310
	welded	125	185
TL-AW-5083 (AlMg 4,5Mn 0,7)	0/H111	110	270
	welded	125	275
TL-AW-5086 (AlMg4)	0/H111	95	240
	welded	100	240
TL-AW-6005A (AlSiMg(A))	T5/T6	215	260
	welded	100	165
TL-AW-6061 (AlMgSiCu)	T5/T6	240	260
	welded	115	155
TL-AW-6082 (AlSiMgMn)	T6	260	310
	welded	125	185

(1) *The strength properties are applicable to both longitudinal and transverse specimens*

1.3 Supplementary to the statements herein, the TL Rules, - Guidelines for Corrosion Protection and Coating Systems contain further requirements, comments and recommendations for the selection of suitable corrosion protection systems, as well as their professional planning/execution and have to be observed too.

1.4 Corrosion protection of structural elements not mentioned in the referenced TL Rules shall be in accordance with recognized standards.

Note:
A recognized standard is e.g. the STG (Schiffbautechnische Gesellschaft, Hamburg)-Guideline No. 2215

1.5 The corrosion additions t_K are defined in Section 4, F.

2. Shop primers

2.1 General

2.1.1 As a rule, shop primers are used to provide protection for the steel parts during storage, transport and work processes in the manufacturing company until such time as further surface preparation is carried out and the subsequent coatings for corrosion protecttion are applied.

2.1.2 Customarily, coatings with a thickness of 15 μm to 20 um are applied. Under normal yard conditions, this should provide corrosion protection for a period of approx. 6 months.

2.1.3 The coating must be of good resistance to withstand the mechanical stresses incurred during the subsequent working of the steel material in the shipbuilding process.

2.1.4 Flame-cutting and welding speeds are not to be unduly impaired. It must be ensured that welding with all welding processes customary in the building of naval ships can be conducted without impermissibly impairing the quality of the weld seam, see the TL Rules Chapter 3 - Welding, - Section 6 General Requirements, Proof of Qualifications, Approvals.

2.1.5 Due to the possible strain to the system presented by cathodic protection, seawater and chemicals, only shop primers are to be used which are alkali-fast and not hydrolysable.

2.1.6 The suitability and compatibility of shop primer for use in the corrosion protection system is to be guaranteed by the manufacturer of the coating materials.

2.2 Approvals

Only those over weldable shop primers may be used for which TL has issued a confirmation of acceptability based on a porosity test in accordance with the TL Rules Chapter 3- Welding Section 6- General Requirements, Proof of Qualifications, Approvals.

3. Hollow spaces

Hollow spaces, such as those in closed box girders, tube supports and the like, which can either be shown to be airtight or are accepted as such from normal shipbuilding experience, need not have their internal surfaces protected. During assembling, however, such hollow spaces must be kept clean and dry.

4. Corrosion, protection of wetted inside areas

4.1 General

All seawater ballast tanks and other inside areas of the ship frequently wetted with seawater and therefore endangered by corrosion, which have boundaries formed by the ship's shell (bottom, outside plating, deck) must be provided with a corrosion protection system.

Such corrosion protection system shall consist of a coating in combination with a cathodic protection system.

4.2 Coating system

4.2.1 Approvals

4.2.1.1 The applied coatings and coating systems

must be approved by TL. The approvals must be obtained by the manufacturers of the coating materials from TL Head Office.

4.2.1.2 Approved coatings and coating systems are compiled in a list "Approved Coatings for Seawater Ballast Tanks". The current list is obtainable from TL Head Office.

4.2.1.3 Approval does not constitute confirmation of the suitability and compatibility of the coatings in the corrosion protection system. They are to be ensured by either the shipyard or the manufacturer of the coating materials.

4.2.2 Surface preparation and coating

4.2.2.1 The surface must be prepared according to the instructions of the manufacturer of the coating material and in accordance with the TL Rules - Guidelines for Corrosion Protection and Coating Systems, Section 4, B.

4.2.2.2 Surface preparation is subject to specification in the product data sheet and must correspond to a valid surface quality grade, e.g. ISO 8501 or ISO 12944-4.

4.2.2.3 Slag and loose weld spatters must be removed before the coating is applied.

4.2.2.4 Welded or otherwise attached accessory material (tack plates, lugs etc.) must be completely - integrated into the corrosion protection, or otherwise removed.

4.2.2.5 The coatings must be in accordance with the manufacturer’s specifications, resistant against sea-water, coastal water, harbor water and the substances they may contain.

4.2.2.6 In addition, the coatings must be resistant against the cathodic protection, i.e. the coatings must not exhibit any impairment of their purpose up to a potential of -1200 mV against the copper/copper-sulphate electrode. Proof of resistance against cathodic corrosion protection can be provided in accordance with recognized standards, e.g. ISO 15711, or similar.

4.2.2.7 The process of application is to be carried out according to the coating manufacturer's instructions and in accordance with the TL Rules - Guidelines for Corrosion Protection and Coating Systems, Section 4, C.

4.2.2.8 The minimum coating thickness shall be 250 μm.

4.3 Cathodic protection

The selection of anodes, protection current requirements, mass calculation and arrangement of anodes shall be accordance with the **TL** Rules, Part A, Chapter 1, Hull, Section 22, J.2.

4.4 Documentation

4.4.1 The work processes involved in setting up a coating system as well as the coating materials to be used must be laid down in a coating plan.

4.4.2 The coating plan for ballast water tanks and other inside areas frequently wetted must be submitted to TL for approval.

4.4.3 The coating protocol is to be compiled in such a way that all work steps executed, including surface preparation and coating materials used, are documented.

4.4.4 This documentation is to be compiled by the coating manufacturer and/or the contractor executing the work and/or the shipyard. An inspection plan must be agreed to between the parties involved. The papers pertaining to the documentation must be signed by these parties. On completion of the coating system, the signed papers constituting the documentation are to be handed to the TL Surveyor for checking and acceptance. The documentation is to contain the following data:

- Location and date
- Naval ship and the spaces treated
- Manufacturer's specifications for the coating system (number of coatings, total coating thickness, processing conditions)
- Product data sheet for the coating and TL approval number
- Contractors and persons carrying out the work
- Surface preparation (procedure, working materials, and ambient conditions)
- Condition of surface prior to coating (cleanness, roughness, existing primer, surface quality grade achieved)
- Application (procedure, number of coatings)
- Application conditions (time, surface/ambient temperature, humidity, dew point, ventilation)
- The date the tanks were first ballasted is to be recorded
- Report on coating thickness measurement and visual inspections
- Signatures of involved parties (shipyard, coating manufacturer, work contractor)

4.4.5 Coating protocols already in existence and used by coating manufacturers, work contractors, shipyards and Naval Authorities will be accepted by TL provided they contain the above data and are signed by all parties involved. Any missing data is to be furnished.

4.4.6 The documentation concerning the design and computation of the cathodic protection must be submitted for perusal. An anode plan needs not to be submitted.

5. Corrosion protection of the underwater hull

5.1 General

5.1.1 Naval ships shall provide a suitable corrosion
protection system for the underwater hull, consisting of coating and cathodic protection. This applies especially for ships with Class Notation **IW** (In-Water Survey, see Chapter 101 - Classification and Surveys). The requirements according to the TL Rules Guidelines for Corrosion Protection and Coating Systems, Section 8 have to be observed

5.1.2 Coatings based on epoxy, polyurethane and polyvinyl chloride are considered suitable.

5.1.3 The coating manufacturer's instructions with regard to surface preparation as well as application conditions and processing must be observed.

5.1.4 The coating, system without antifouling, shall have a minimum dry film thickness of 250 μm, shall be compatible to cathodic protection in accordance with recognized standards and shall be suitable for being cleaned underwater by mechanical means.

5.1.5 The cathodic protection can be provided by means of sacrificial anodes, or by impressed current systems.

5.1.6 In the case of impressed current systems, overprotection due to inadequately low potential is to be avoided. A screen (dielectric shield) is to be provided in the immediate vicinity of the impressed current anodes.

5.1.7 Cathodic protection by means of sacrificial anodes is to be designed at least for one dry-docking period and for protection of the complete underwater hull. Upon special request of the Naval Authority a part protection (stern protection) can be accepted, but only for ships not intended for **IW** Class Notation.

The use of aluminium anodes is only acceptable if the ship is intended to operate for at least 4500 hours per year.

5.2 Documentation

5.2.1 The coating plan and the design data including the necessary calculation for the cathodic protection are to be submitted for approval.

5.2.2 In the case of impressed current systems, the following details must also be submitted:

- Location and constructional integration (e.g. by a cofferdam) of the anodes in the ship's skin
- Descriptions of how all appendages, e.g. rudder, propeller and shafts, are incorporated into the cathodic protection
- Electrical supply and electrical distribution system

5.2.3 The work processes involved in setting up the coating system as well as the coating materials to be used must be laid down in the coating plan.

5.2.4 A coating protocol is to be compiled in such a way that details of all the work processes executed, including surface preparation as well as the coating materials used, are recorded.

5.2.5 This documentation is to be compiled by the coating manufacturer and/or the contractor executing the work and/or the shipyard. An inspection plan must be agreed upon between the parties involved. The papers pertaining to the documentation must be signed by these parties. On completion of the coating system, the signed papers constituting the documentation are to be handed to the TL Surveyor for acceptance.

5.2.6 In the case of impressed current systems, the functionability of the cathodic corrosion protection is to be tested during sea trials. The values obtained for the protection current and voltage must be recorded.

6. Special requirements for stainless steels and stainless steel castings

6.1 Protective measures

Stainless steels and stainless steel castings exhibit a passive surface state in seawater, as is the case in several other media. Accordingly, coating of structures of these types of steel is only recommended under special conditions. Depending on the composition and grain structure, stainless steels are sensitive to local corrosion, such as pitting and crevice corrosion.

6.2 Cathodic protection

Cathodic corrosion protection may prevent or reduce pitting and crevice corrosion; in the case of crevice corrosion the effect is limited, depending on the crevice geometry.

Note:
Uncoated stainless steels need not to be protected cathodically if they are suitable for withstanding the corrosion stress. Coated stainless steels must be cathodically protected in the submerged zone.

6.3 Design and workmanship

The following fundamental principles shall be observed:

- Crevices shall be avoided as far as possible, if this is not feasible, the crevice shall be made as wide as possible
- Flanges shall be made of materials with a greater corrosion resistance
- Heat transmission paths should be avoided
- Welds to be executed in technically competent manner
- Weld joints to be post-treated in a technically competent manner
- Coarse mechanical grinding is not permitted
- The surface should be smooth as possible
- Only suitable processing tools are to be used e.g. "stainless steel brush"

6.4 Further information

Further information including material selection, cathodic protection, surface preparation, etc. is contained in the TL Rules - Guidelines for Corrosion Protection and Coating Systems.

7. Special requirements for aluminium alloys

7.1 For hull structures or components of zinc-free aluminium materials which are continuously submerged in seawater, cathodic protection with a protective potential of less than -0,55 V by sacrificial anodes is required. For aluminium materials which are only exposed to spray water, corrosion protection is not necessary. In many cases, a coating is selected for the reason of aesthetics, signature reduction or as a basis for an antifouling system. The requirements for corrosion protection shall be observed with such applications.

7.2 Further information including material selection, cathodic protection, surface preparation, etc. is contained in the TL Rules - Guidelines for Corrosion Protection and Coating Systems.

8. Combination of materials

8.1 Preventive measures are to be taken to avoid contact corrosion associated with the combination of dissimilar metals with different potentials in an electrolyte solution, such as seawater.

8.2 In addition to selecting appropriate materials, steps such as suitable insulation, an effective coating and the application of cathodic protection can be taken in order to prevent contact corrosion.

9. Fitting-out and berthing periods

9.1 For protection against corrosion arising from stray currents, such as those occurring due to inappropriate direct-current electrical supply to the naval ship for welding or mains lighting, as well as those arising from direct-current supplies to other facilities e.g. shore cranes and neighboring ships, the provision of even additional cathodic protection by means of sacrificial anodes is not suitable.

9.2 Suitable measures are to be taken to prevent the formation of stray currents and suitable electric drainage is to be provided.

9.3 Particularly in the event of lengthy fitting-out periods, welding rectifiers are to be so arranged that stray currents can be eliminated. This is considered to be especially important for naval ships.

SECTION 4

DESIGN PRINCIPLES

A. General

1. Scope

1.1 This Section contains design principles and strength criteria for the main structural elements of the hull. The basic formulae for the design of plates and primary and secondary stiffening members are given in a manner to allow computer-based scantling evaluation. Also permissible deformations and minimum plate thicknesses are defined.

1.2 These Rules apply to hull structures of monohull, displacement type of naval ships.

1.3 These Rules may also be applied to the hull structures of other types of naval surface ships classed with TL according to mutual agreement.

1.4 Rational ship design

Naval ships, for which special analysis procedures are carried out, will be assigned the Class Notation **RSD** ("Rational Ship Design").

The analysis procedures required for the ship's hull comprise inter alia the following:

- first principles procedures by means of e.g. finite element analysis techniques
- calculation of usage factors and detailed assessment of highly stressed structures
- determination of explicit corrosion margins of structural members
- global structural analysis
- direct analysis of loads

2. Strength analyses

2.1 In general, a direct analysis of the structure has to be performed.

The loads described in Sections 5 and 6 may be used in general. For special hull forms individual load analyses are required.

2.2 Concept of partial safety factors

2.2.1 The strength assessment according to these Rules is based on the concept of partial safety factors. The partial safety factors γ_f and γ_m make allowance for the variations in loads and resistance parameters.

2.2.2 In general the concept for the calculation of minimum scantlings according to these Rules can be expressed as follows

$$\frac{f(R_{eH})}{\gamma_m} \geq \gamma_{fstat} \cdot f(F_{stat}) + \Psi_i \cdot \gamma_{fdyn} \cdot f(F_{dyn})$$

$f(R_{eH})$ = function of the structural resistance based on the minimum yield stress and 0,2% proof stress respectively of the material up to a strain of 10 %

$f(F_{stat})$ = function of the static loads acting on the structure

$f(F_{dyn})$ = function of the dynamic loads acting on the structure

γ_m = partial safety factor for structural resistance, see Table 4.1

γ_{fstat} = partial safety factor for static load components, see Table 4.1

γ_{fdyn} = partial safety factor for dynamic load components, see Table 4.1

Ψ_i = combination factor for simultaneousness of statistically independent dynamic loads

In Table 4.1 two values of Ψ_i are given. If more than one statistically independent dynamic load is acting on the structure Ψ_{imax} is to be used for one dynamic load in combination with Ψ_{imin} for all other dynamic loads.

2.2.3 Partial safety factors

The partial safety factors have to be distinguished for four load cases and the maximum resulting dimensions have to be provided:

LCA: permanent and cyclic loads acting on the undamaged structure in ordinary operation condition

LCB: static and cyclic loads acting on the undamaged structure in extreme operation condition, i.e.
- tank test
- hull girder strength in case of compartments flooded
- watertight bulkheads in case of compart ments flooded

LCC: permanent and cyclic loads in ordinary operation condition. This load case is used for fatigue analyses.

LCD: static and cyclic loads acting on the damaged structure as specified in Section 21, A.4 if applicable

The partial safety factors for these load cases are summarized in Table 4.1.

2.2.4 Fatigue analysis

A fatigue analysis according to Section 17 is required for all structural members loaded by cyclic loads resulting from waves or engines:

$$\Delta\sigma_{Rc} \cdot f_n \geq \Delta\sigma\left(f_a \cdot F_{dyn}\right)$$

$\Delta\sigma_{Rc}$ = allowable reference stress range [N/mm^2] according to Section 17, B.3.2

f_n = factor considering the allowable number of load cycles n_{max}, see Section 17, Table 17.2

$\Delta\sigma(f_a \cdot F_{dyn})$ = actual stress range [N/mm^2] due to dynamic loads with probability factor f_a for the probability within n_{max}

2.2.5 Impact loads

For impact loads, slamming, landing impact of aircraft, loads due to blast, etc. the following relation is to be fulfilled:

$$\frac{f\left(R_{eH}\right)}{\gamma_m} \geq f\left(F_{imp}\right)$$

$f(F_{imp})$ = function of the impact load on the structure

3. Sign of stresses

In general, except for buckling calculations according to H.1.2, for design purposes normal stresses, i.e. bending and/or in-plane stresses are to be taken positive for tension and negative for compression.

B. Design of Plates

1. General

The general scantling requirements for the hull structural plating are specified in the following.

2. Definitions

R_{eH} = minimum yield stress [N/mm^2] according to Section 3, B.

= 0,2 % proof stress $R_{p0,2}$ for aluminium alloys [N/mm^2] according to Section 3, D.

t_K = corrosion addition according to F.5.

c_a = factor considering aspect ratio of plate panel

for point A, see Figure 4.1 of transversely stiffened plate panels and for point B of longitudinally stiffened plate panels:

$$= 1{,}0 - 0{,}3\left(\frac{a}{b}\right)^4$$

for point A of longitudinally stiffened plate panels and for point B of transversely stiffened plate panels:

$$= 0{,}83 - 0{,}13\left(\frac{a}{b}\right)^8$$

a = breadth of smaller side of plate panel [m], see Figure 4.1

b = breadth of larger side of plate panel [m], see Figure 4.1

Table 4.1 Partial safety factors

Load case	LCA	LCB	LCC	LCD
Factor for structural resistance γ_m	1,1	1,1	1,0	1,1
Load factor γ_{fstat}	1,5	1,05	1,0	1,0
Load factor γ_{fdyn}	2,0	1,4	1,0	1,0
Combination factor Ψ_i				
Ψ_{imin}	0,75	0,7	0,75	0,7
Ψ_{imax}	1,0	1,0	1,0	1,0

c_r = 1 for flat plates

$$= 1 - \frac{a}{2 \cdot r}$$ for curved plates

r = radius of curvature [m]

r_{min} ≥ 2 · a

σ_x = membrane stress acting in ship's longitudinal direction [N/mm^2]

= $\sigma_{xL} + \sigma_{xb}$

σ_y = membrane stress acting perpendicular to σ_x [N/mm^2]

= $\sigma_{yL} + \sigma_{yb}$

σ_{xL} = hull girder bending stress acting in ship's longitudinal direction [N/mm^2], see Section 6, E.6.

σ_{yL} = hull girder bending stress acting rectangular to σ_{xL} [N/mm^2], approximately 0,3 · σ_{xL}

σ_{xb} = bending stress of primary members and of secondary stiffeners acting parallel to σ_{xL} [N/mm^2]

σ_{yb} = bending stress of primary members acting parallel to σ_{yL}

τ_{xy} = shear stress in x and y direction [N/mm^2]

= $\tau_L + \tau_b$

τ_L = shear stress due to hull girder bending [N/mm^2], see Section 6, E.

τ_b = shear stress due to shear forces in primary members [N/mm^2]

3. Scantlings

3.1 Load centre of lateral pressure for vertical plating

As load centre for plates is defined:

- vertical stiffening system:

  0,5 x stiffener spacing above the lower support of plate field, or edge of plate when the thickness changes within the plate field

- horizontal stiffening system:

  midpoint of plate field

3.2 The thickness of the plating is not to be less than:

$$t = t' + t_K \quad [\text{mm}]$$

$$t' = 13{,}3 \cdot a \sqrt{\frac{p}{\sigma_{perm}}} \cdot c_a \cdot c_r \quad [\text{mm}]$$

p = lateral design pressure [kN/m^2]

= $\gamma_{fstat} \cdot p_{stat} + \gamma_{fdyn} \cdot p_{dyn}$

p_{stat} = static lateral pressure according to Section 5 [kN/m^2]

p_{dyn} = dynamic lateral pressure according to Section 5 [kN/m^2]

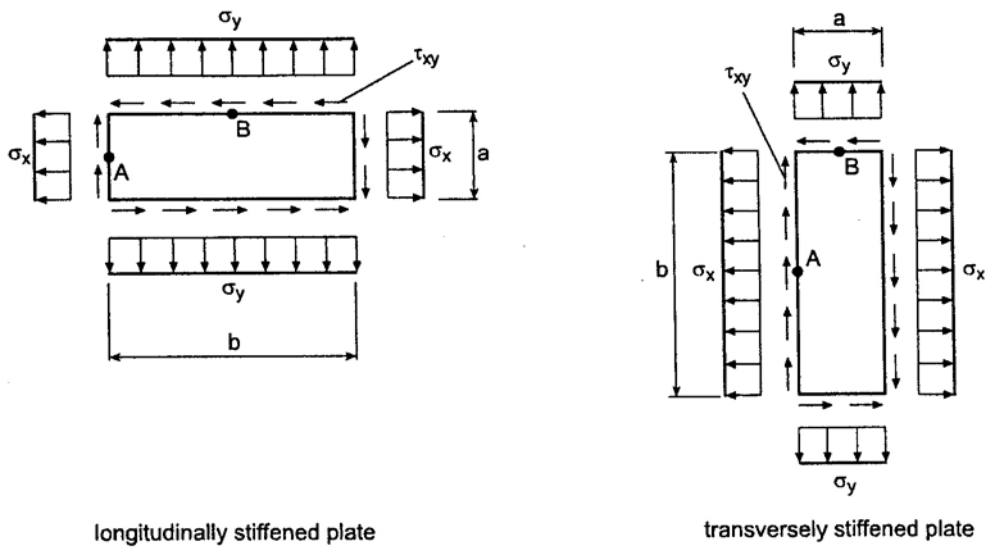

Figure 4.1 Definition of dimensions and stresses at a plate panel

σ_{perm} = permissible stress [N/mm^2]

$$= \sqrt{R_{eH}^{\ 2} - 0{,}0854 \cdot U_1^{\ 2} - 3\left(\gamma_m \cdot \tau_{xy}\right)^2}$$

$$- 0{,}225 \cdot U_2 \ \left[\mathrm{N/mm^2}\right]$$

for the points A of the plate panel according to Figure 4.1:

$$= \sqrt{R_{eH}^{\ 2} - 0{,}0854 \cdot V_1^{\ 2} - 3\left(\gamma_m \cdot \tau_{xy}\right)^2}$$

$$- 0{,}225 \cdot V_2 \ \left[\mathrm{N/mm^2}\right]$$

for the points B of the plate panel according to Fig 4.1:

U_1 = γ_m $(\sigma_x - 3{,}33 \cdot \sigma_y)$

U_2 = γ_m $(4{,}25 \cdot \sigma_x - \sigma_y)$

V_1 = γ_m $(\sigma_y - 3{,}33 \cdot \sigma_x)$

V_2 = γ_m $(4{,}25 \cdot \sigma_y - \sigma_x)$

In general $\sigma_{perm} = \dfrac{R_{eH}}{\gamma_m}$ can be used.

4. Buckling strength

The thicknesses obtained from 3. are to be verified for sufficient buckling strength according to H. For this purpose the design stresses according to Section 6 from longitudinal strength and stresses due to local loads are to be considered in load case C.

5. Minimum thickness of plating

At no point the thickness of welded steel structures shall be less than the minimum thickness t_{min} defined in Table 4.2. Minor thicknesses of extruded aluminium are subject of separate approval.

C. Scantlings of Secondary Stiffening Members

1. General

The design principles of frames and beams for the general case of a trapezoidal lateral load and different types of end connection are given in Table 4.3. The upper part of the Table applies to calculation details of bending stresses which are to be combined with hull girder bending stresses and bending stresses and normal stresses of primary members if applicable for fatigue strength assessment. The lower part of the Table applies to calculation of scantlings.

The actual sectional properties are to be related to an axis parallel to the attached plating. The effective width of plating is to be calculated according to G.

2. Definitions

a = spacing of stiffeners [m]

ℓ = unsupported span [m], see Table 4.3

f_p = ratio of plastic and elastic section modulus of the profile

$$= \frac{W_p}{W}$$

= 1,65 for flat bars
= 1,40 for bulb profiles
= 1,25 for rolled angle bars

$$f_{pmax} \le \frac{R_m}{R_{eH}}$$

W = elastic section modulus [cm^3] including effective width of plating according to G. 1.

W_p = plastic section modulus [cm^3] including effective width of plating according to G.1.

Table 4.2 Minimum thickness of plating

Elements of the hull structure		Minimum thickness t_{min} [mm]
Designation	**Reference position**	**Designation**
Flat plate keel	Section 7	$14 \cdot \sqrt{\frac{L}{R_{eH}}}$
Shell plating: $z \le T + \frac{c_0}{2}$ (1)		$10 \cdot \sqrt{\frac{L}{R_{eH}}}$
$z > T + \frac{c_0}{2}$		$7 \cdot \sqrt{\frac{L}{R_{eH}}}$
All strength relevant structural platings	various Sections	3,0
(1) *for c_0 see Section 5, A.3.*		

k_{sp} = factor for profile type, see Table 4.5

m = factor considering aspect ratio

$$= \frac{0{,}204 \cdot a}{\ell} \cdot \left[4 - \left(\frac{a}{\ell}\right)^2\right]$$

a need not be greater than ℓ

n = factor considering end connection

$$= \left[1 - \frac{\sum \ell_{ki} \cdot \sin^2 \alpha_i}{\ell}\right]^2$$

ℓ_{ki} = length of end connection [m], see Table 4.3

α_i = angle of end connection [°], see Table 4.3

p_A = pressure at the upper boundary of the stiffener [kN/m^2], see Table 4.3

p_B = pressure at the lower boundary of the stiffener [kN/m^2], see Table 4.3

R_{eH} = minimum yield stress [N/mm^2] according to Section 3, B.

= 0,2 % proof stress for aluminium alloys [N/mm^2] according to Section 3, D.

R_m = tensile strength [N/mm^2]

t_K [mm] = corrosion addition according to F.5.

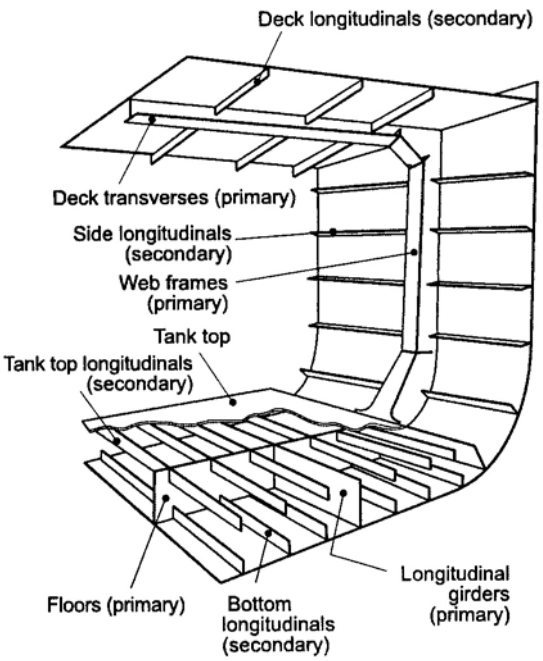

Figure 4.2 Definitions of primary and secondary stiffening members of the hull structure (longitudinal framing system)

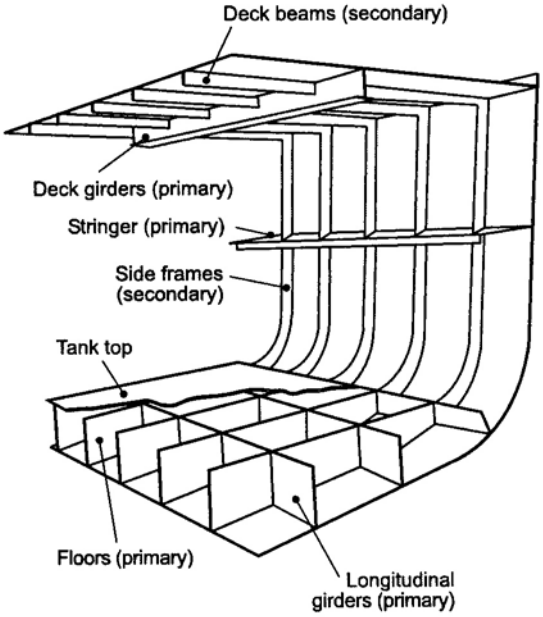

Figure 4.3 Definitions of primary and secondary stiffening members of the hull structure (transverse framing system)

3. End attachments

3.1 Definitions

For determining scantlings of beams, stiffeners and girders the terms "constraint" and "simple support" will be used.

"Constraint" will be assumed where for instance the stiffeners are rigidly connected to other members by means of brackets or are running throughout over supporting girders. "Simple support" will be assumed where for instance the stiffener ends are sniped or the stiffeners are connected to plating only.

3.2 Sniped ends of stiffeners

Stiffeners may be sniped at the ends, if the thickness of the plating supported by stiffeners is not less than:

$$t = 20\sqrt{\frac{F \cdot \gamma_m}{R_{eH}}} + t_K \ [mm]$$

F = maximum support force [kN] to be transferred by the plating

= F_A or F_B according to Table 4.3

3.3 Brackets

3.3.1 For the scantlings of brackets the required section modulus of the stiffener is determining. Where stiffeners of different section moduli are connected to each other, the scantlings of the brackets are generally governed by the smaller stiffener.

3.3.2 The thickness of brackets is not to be less than:

$$t = c \cdot \sqrt[3]{W \cdot R_{eHp}} + t_k \ [mm]$$

c = 0,19 for non-flanged brackets

= 0,15 for flanged brackets

R_{eHp} = minimum yield stress of the profile material [N/mm^2]

W = section modulus of smaller stiffener [cm^3], see end attachment in Table 4.3

t_{min} = 5,0 mm

t_{max} = web thickness of smaller stiffener

For minimum thicknesses in tanks see Section 10.

3.3.3 The arm length of brackets is not to be less than:

$$\ell = 115 \cdot \frac{\sqrt[3]{W \cdot R_{eHp}}}{\sqrt{R_{eHb}}} \cdot c_t \ [mm]$$

ℓ_{min} = 100 mm

R_{eHp} = see 3.3.2

R_{eHb} = minimum yield stress of the bracket material [N/mm^2]

t = "as built" thickness of bracket [mm]

$$c_t = \sqrt{\frac{t}{t_a}}$$

≥ t according to 3.3.2

W = see 3.3.2

The arm length ℓ is the length of the welded connection.

Note

For deviating arm lengths the thickness of bracket is to be estimated by direct calculations considering sufficient safety against buckling.

3.3.4 The throat thickness of the welded connection is to be determined according to Section 15.

3.3.5 Where flanged brackets are used, the width of flange is to be determined according to the following formula:

$$b = 40 + \frac{W}{30}\ [\text{mm}]$$

b_{max} = 90 mm

3.3.6 Tween deck frames are to be connected to the main frames below. The end attachment may be carried out in accordance with Figure 4.4.

The following requirement must be fulfilled:

$W_0 \cdot R_{eH0} \geq W_1 \cdot R_{eH1} + W_2 \cdot R_{eH2}$

W_i = section modules

Index 0 refers to the profile with the greatest capacity of the connection point.

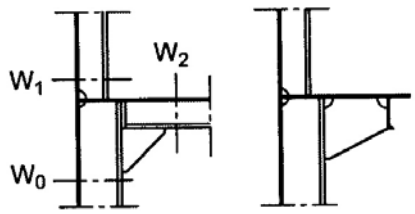

Figure 4.4 Connection of tween deck frames with decks and frames below

Table 4.3 Principles for the dimensioning of longitudinals, transverse frames and beams

Arrangement and loads	Type of end connection		
	Simple support at both ends	Simple support at one end, constraint at other end	Constraint at both ends
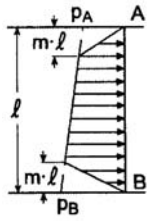	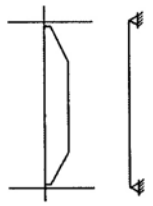	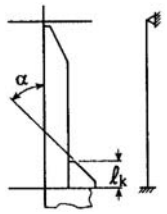	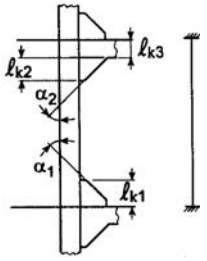
Calculation of details for fatigue strength assessment:			
Pressure at A [kN/m²] Pressure at B [kN/m²]	$p_A = p_{Astat} + p_{Adyn}$ $p_B = p_{Bstat} + p_{Bdyn}$		
Shear force (elastic) [kN]	$F_{A0} = \frac{a \cdot \ell}{6}\{ p_A[2 - m(3 - m)] + p_B(1 - m^2) \}$ $F_{B0} = \frac{a \cdot \ell}{6}\{ p_A(1 - m^2) + p_B[2 - m(3 - m)] \}$	$F_A = F_{A0} - \frac{M_B}{\ell}$ $F_B = F_{B0} + \frac{M_B}{\ell}$	$F_A = F_{A0} + \frac{M_A - M_B}{\ell}$ $F_B = F_{B0} - \frac{M_A - M_B}{\ell}$
Bending moment (elastic) [kNm]	$M_0 = \frac{a \cdot \ell^2}{12}(0{,}75 - m^2) \cdot (p_A + p_B)$	$M_B = \frac{a \cdot \ell^2}{12} \cdot n \cdot [\, p_A(0{,}7 - 0{,}925\, m^2) + p_B(0{,}8 - 0{,}925\, m^2) \,]$	$M_A = \frac{a \cdot \ell^2}{12} \cdot n \cdot [\, p_A(0{,}6 - 1{,}15\, m^2) + p_B(0{,}4 - 0{,}35\, m^2) \,]$ $M_B = \frac{a \cdot \ell^2}{12} \cdot n \cdot [\, p_A(0{,}4 - 0{,}35\, m^2) + p_B(0{,}6 - 1{,}15\, m^2) \,]$
Elastic shear stress [N/mm²]		$\tau_B = \frac{F_B \cdot 10}{A_{SB}}$	$\tau_A = \frac{F_A \cdot 10}{A_{SA}}$ $\tau_B = \frac{F_B \cdot 10}{A_{SB}}$
Elastic bending stress [N/mm²]	$\sigma = \frac{M_0 \cdot k_{sp} \cdot 10^3}{W}$	$\sigma_B = \frac{M_B \cdot k_{sp} \cdot 10^3}{W}$	$\sigma_A = \frac{M_A \cdot k_{sp} \cdot 10^3}{W}$ $\sigma_B = \frac{M_B \cdot k_{sp} \cdot 10^3}{W}$
Calculation of details for ultimate strength assessment:			
Pressure at A [kN/m²] Pressure at B [kN/m²]	$p_{AU} = \gamma_{fstat} \cdot p_{Astat} + \gamma_{fdyn} \cdot p_{Adyn}$ $p_{BU} = \gamma_{fstat} \cdot p_{Bstat} + \gamma_{fdyn} \cdot p_{Bdyn}$		
Max. nominal shear force [kN]	$F_A = \frac{a \cdot \ell}{6}\{p_{AU}[2 - m(3 - m)] + p_{BU}(1 - m^2)\}$ $F_B = \frac{a \cdot \ell}{6}\{p_{AU}(1 - m^2) + p_{BU}[2 - m(3 - m)]\}$		
Max. nominal bending moment [kNm]	$M_0 = \frac{a \cdot \ell^2}{12}(0{,}75 - m^2) \cdot (p_{AU} + p_{BU})$		
Min. shear area A_s [cm²]	$\frac{F_A \cdot \gamma_m \cdot \sqrt{3} \cdot 10}{R_{eH}} \le A_S \ge \frac{F_B \cdot \gamma_m \cdot \sqrt{3} \cdot 10}{R_{eH}}$		
Min. section modulus W of profile [cm³]	$W \ge \frac{M_0 \cdot k_{sp} \cdot \gamma_m \cdot 10^3}{R_{eH} \cdot f_p}$	$W \ge \frac{n \cdot M_0 \cdot k_{sp} \cdot \gamma_m \cdot 10^3}{1{,}5 \cdot R_{eH} \cdot f_p}$	$W \ge \frac{n \cdot M_0 \cdot k_{sp} \cdot \gamma_m \cdot 10^3}{2 \cdot R_{eH} \cdot f_p}$
End attachment	See 3.2	See 3.2. See 3.3, for the design of brackets n = 1 is to be used	See 3.3, for the design of brackets n = 1 is to be used
Other types of load combinations and/or end connections are subject to direct calculation			

4. Curved transverse frames

In the case of curved frames, the influence of curvature may be taken into account by the factor c_r.

The section modulus determined in 1. may be multiplied by the factor c_r, which is given in Table 4.4, see also Figure 4.5.

Table 4.4 Curvature factor c_r for curved transverse frames

s/l	c_r
< 0,125	$1{,}0 - 2 \cdot \frac{s}{\ell}$
≥ 0,125	0,75

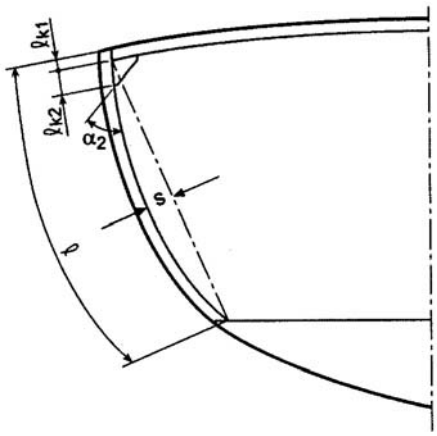

Figure 4.5 Curved transverse frame

5. Additional stresses in asymmetric sections

The additional stress σ_h occurring in asymmetric sections according to Figure 4.6 may be calculated by the following formula:

$$\sigma_h = Q \cdot \ell_f \cdot t_f \cdot \frac{b_1^2 - b_2^2}{c \cdot W_y \cdot W_Z} \left[\mathrm{N/mm^2}\right]$$

Q = load on section parallel to its web within the unsupported span ℓ_f [kN]

= $p \cdot a \cdot \ell_f$ [kN] in case of uniformly distributed load p [kN/m^2]

ℓ_f = unsupported span of flange [m]

t_f, b_1 = flange dimensions [mm]

b_2 = as shown in Figure 4.6

b_1 ≥ b_2

W_y = section modulus of section related to the y-y axis including the effective width of plating [cm^3]

W_z = section modulus of the partial section consisting of flange and half of web area related to the z-z axis [cm^3], (bulb sections may be converted into a similar L-section).

c = factor depending on kind of load, stiffness of the section's web and length and kind of support of profile

For profiles clamped at both ends c = 80 can be taken for approximation.

This additional stress σh is to be added directly to other stresses such as those resulting from local and hull girder bending.

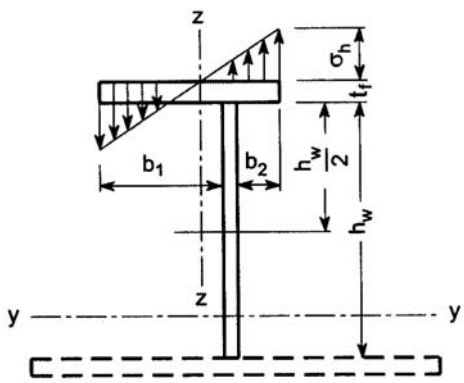

Figure 4.6 Additional stresses at asymmetric sections

The total stress [N/mm^2] according to local bending thus results in:

$$\sigma = \frac{Q \cdot \ell_f \cdot 1000}{12 \cdot W_y}\left[1 + \frac{12 \cdot t_f\left(b_1^2 - b_2^2\right)}{1000 \cdot c \cdot W_z}\right]$$

Therefore the required section modulus Wy is increased in Table 4.3 by the factor k_{sp} depending on the type of profile and the boundary conditions expressed by the factor c.

$$k_{sp} = \frac{12 \cdot W_y}{Q \cdot \ell_f \cdot 1000} \cdot \sigma$$

For k_{sp} at least the values in Table 4.5 are to be taken.

Table 4.5 Factor k_{sp} for various sections

Type of section	k_{sp}
Flat bars and symmetric T-sections	1,00
Bulb sections	1,03
Asymmetric T-sections $\frac{b_2}{b_1} \approx 0{,}5$	1,05
Rolled angles (L-sections)	1,15

6. Corrugated bulkhead elements

Care is to be taken that the forces acting at the supports of corrugated bulkheads are properly transmitted into the adjacent structure by fitting structural elements such as carlings, girders or floors in line with the corrugations.

Note

Where carlings or similar elements cannot be fitted in line with the web strips of corrugated bulkhead elements, these web strips cannot be included into the section modulus at the support point for transmitting the moment of constraint.

Other than in Section 9, D. 3. the section modulus of a corrugated element is then to be determined by the following formula.

$$W = t \cdot b(d + t) \; \left[cm^3\right]$$

D. Primary Members

1. General

1.1 The strength of primary members has to be in accordance with the requirement in A.2.2.2

1.2 Sufficient fatigue strength has to be verified with the aid of a linear elastical 2D - and/or 3D - model for each typical compartment or global model, see Figure 4.8 and 4.9.

1.3 If deemed necessary fine mesh models are required in way of high stressed areas, see Figure 4.10.

2. Local scantlings

2.1 In general the depth of girders should not be less than 1/25 of the unsupported span. The web depth of girders supporting continuous secondary stiffeners is to be at least 1,5 times the depth of the stiffeners.

2.2 Face plates should be stiffened by tripping brackets with a sufficient spacing. At girders of symmetrical section, they are to be arranged alternately on both sides of the web.

2.3 The local scantlings between two supports (e.g. other primary members) are to be determined on the basis of the following criteria:

- shear criterion

Qp = shear capacity [kN] of the primary member at the location considered according to E.

$$\frac{Q_p}{\gamma_m} \geq F_s$$

γ_m = partial safety factor according to Table 4.1

F_s = shear force [kN] due to the loads acting including partial safety factor for loads according to Table 4.1 for load case A or B whichever is applicable

- bending criterion

$$\frac{M_p}{\gamma_m} \geq M_b$$

M_p = bending capacity [kNm] of the primary member at the location considered acc. E.

Mb = plastic bending moment [kNm] due to the load acting incl. partial safety factor for loads according Table 4.1 for load case A or B whichever is applicable

2.4 For the general case of a trapezoidal lateral load and typical end connection, the following values for F_s and M_b can be used for primary members supporting secondary stiffeners:

shear forces for girders supported at both ends A and B

at point A:

$$F_{SA} = \frac{e \cdot \ell}{6}\left\{p_{AU}\left[2 - m(3 - m)\right] + p_{BU}\left(1 - m^2\right)\right\}\ [kN]$$

at point B:

$$F_{SB} = \frac{e \cdot \ell}{6}\left\{p_{AU}\left(1 - m^2\right) + p_{BU}\left[2 - m(3 - m)\right]\right\}\ [kN]$$

shear force at the support of cantilevers:

$$F_{SC} = e \cdot \ell\left(p_A + p_B\right)\ [kN]$$

bending moment

$$M_b = \frac{0{,}0625 \cdot n \cdot e \cdot \ell^2}{c_s}\left(p_{AU} + p_{BU}\right)\ [kNm]$$

e = load width [m] (= unsupported length of the secondary stiffeners)

ℓ = unsupported length [m], see Figure 4.7

m = $\frac{1}{n_b}$

n_b = number of the spacing of secondary stiffeners within the length ℓ

p_{AU}, p_{BU} = load [kN/m^2] at point A and B acc. Section 5

p_{AU} = $\gamma_{fstat} \cdot p_{Astat} + \gamma_{fdyn} \cdot p_{Adyn}$

p_{BU} = $\gamma_{fstat} \cdot p_{Bstat} + \gamma_{fdyn} \cdot p_{Bdyn}$

c_s = coefficient for end support condition

c_s = 2,0 for both ends fixed

c_s = 1,5 for one end simply supported and one end fixed

c_s = 1,0 for both ends simply supported

c_s = 0,25 for cantilevers

n = factor for end connection (similar to C. 2)

For other loads and end connections F_s and M_b are to be calculated separately.

The local scantlings of girders in ships longitudinal direction are not to be less than the requirement regarding buckling of Section 6.

3. Permissible deflections

3.1 The maximum permissible elastic deflection of a loaded girder, with the length ℓ under consideration of a partial safety factor γ_f = 1 shall be:

$$f_{perm} = \frac{\ell}{500} \quad \text{for steel structures}$$

$$= \frac{\ell}{300} \quad \text{for aluminium alloys}$$

3.2 Smaller deflections may be required if the proper functioning of naval equipment, like driving devices, weapons, sensors, etc. would be impaired by the deflections defined above.

E. Girder Ultimate Strength

1. General

The girder ultimate strength is defined as the maximum normal force bending and/or shear capacity beyond which the girder will collapse. The ultimate strength has to be calculated with the following limitations

- yielding of material up to a maximum strain of 10 %
- buckling of compressed structural elements including nominal pre-deflection as described in H.
- non linear deformation effects

In general appropriate FE-programs can be used.

Simplified formulae are given in 2. for bending and 3. for shear.

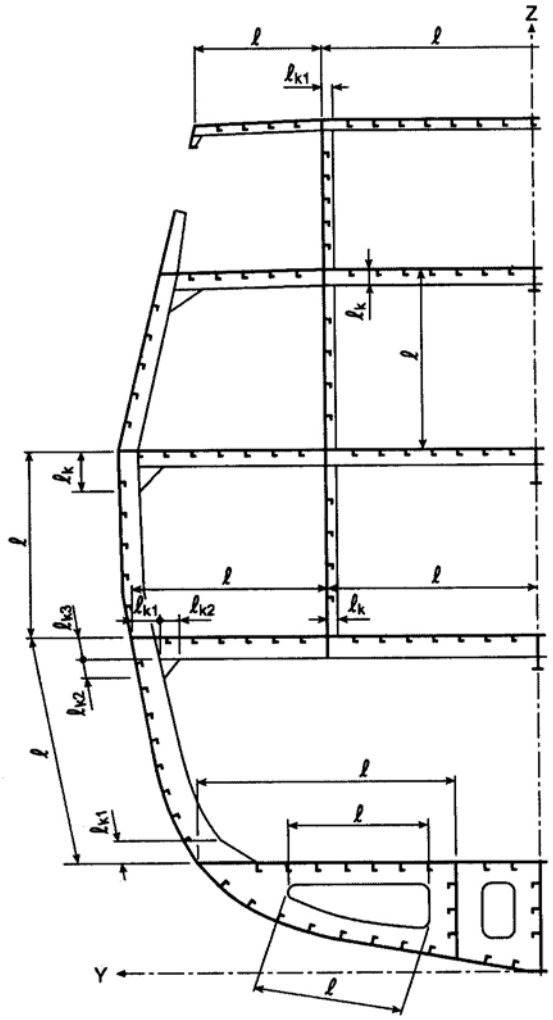

Figure 4.7 2D – transverse members

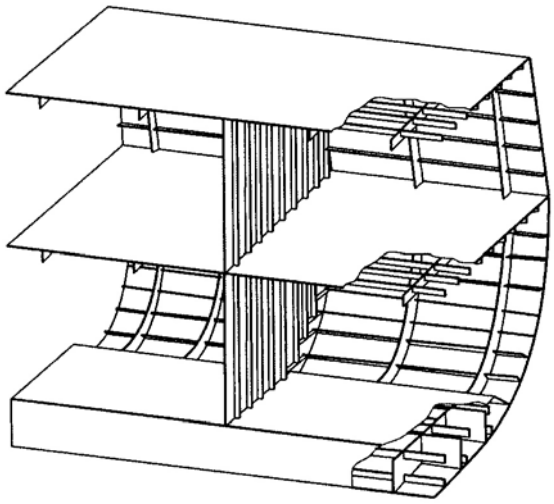

Figure 4.8 3D - compartment length

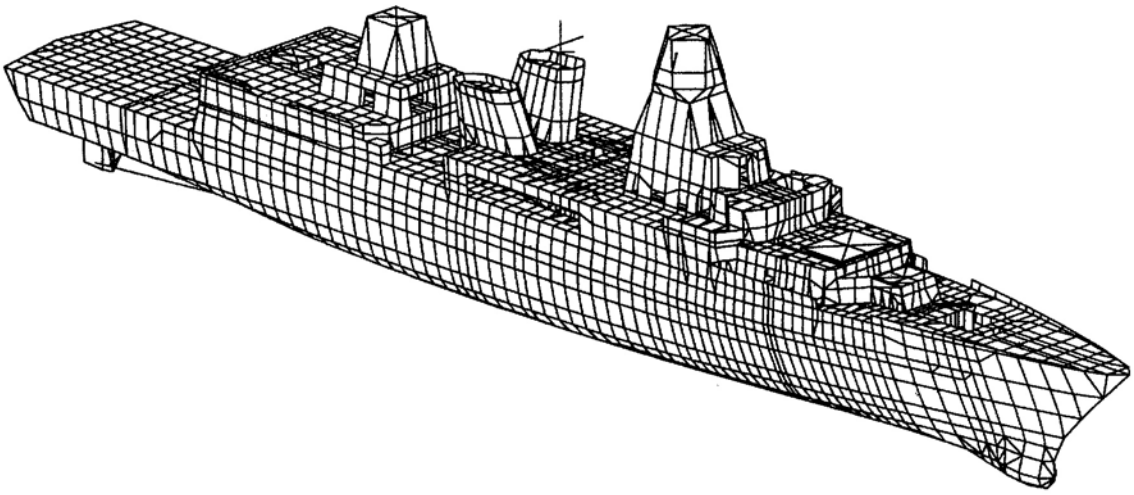

Figure 4.9 Ship structure subject to global analysis

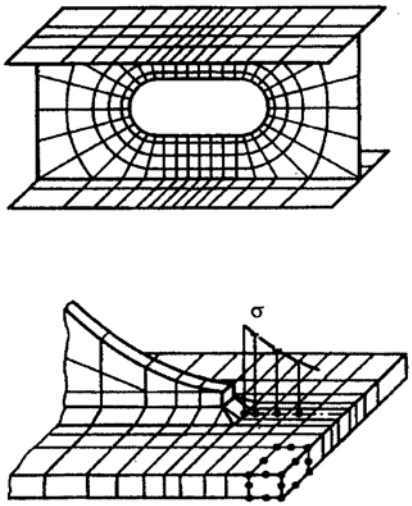

Figure 4.10 Examples for local models of high stressed areas

2. Ultimate bending capacity

The ultimate bending capacity M_p can be calculated as follows:

$$M_p = \frac{1}{10^6} \sum_{i=1}^{n} \cdot A_{ei} \cdot R_{eHi} \cdot e_{pi} \; [kNm]$$

n = number of structural elements effective for bending in the cross section considered

A_{ei} = effective area [mm^2] of the structural element i (the reduction factors according to G. and H. are to be considered)

e_{pi} = distance [mm] of the centre of the area Aei from the neutral axis of the yielded section

$$f_p = \frac{M_p \cdot 10^{-3}}{W \cdot R_{eH}} \leq \frac{R_m}{R_{eH}}$$

W = minimum elastic section modulus [m^3]

R_{eH} = minimum yield stress [N/mm^2]

R_m = tensile strength [N/mm^2]

If shear forces are acting simultaneously the areas transferring shear are to be neglected.

3. Ultimate shear capacity

The ultimate shear capacity Qp can be calculated as follows:

$$Q_p = \sum_{i=1}^{n} \frac{A_{si}}{10^3} \cdot \frac{R_{eHi}}{\sqrt{3}} \; [kN]$$

n = number of structural effective elements for shear in the cross section considered

A_{Si} = effective shear area [mm^2] of element i (the reduction factors acc. H and the direction of shear flow are to be considered)

F. Corrosion Additions and Rounding-Off Tolerances

1. General

The following corrosion additions apply provided an effective corrosion protection system is used and continuously maintained.

Different additions required by the Naval Authority may be accepted by TL. But in no case the additions shall be less than the fabrication tolerances, see TL Rules - Chapter 2 – Materials.

2. Steel

Based on the calculated values the scantling determination requires the corrosion addition t_K to the theoretical plate thickness:

- t_K = 0,5 mm in general
- = 0,7 mm for lubrication oil, gas oil or equivalent tanks
- = 1,0 mm for water ballast and waster-water tanks
- for special applications t_K shall be agreed with TL

For all elements of the ship's structure which are forming a boundary of tanks, the t_K values for tanks have to be considered.

3. Aluminium alloys

If the measures for corrosion protection described in Section 3, E. and F.7. are fully applied, the corrosion

addition t_K can be assumed as 0,2 mm for the aluminium alloys defined in Section 3, D.

In any way t_K shall not be less than the delivery tolerances, see TL Rules Chapter 2 Materials, Section 9, 10 Non Ferrous Metals. If the under-thickness tolerance for extrusions is more than 7 %, the exceeding difference has to be considered for the calculations.

4. Rounding-off tolerances

Where in determining plate thicknesses in accordance with the provisions of the following Sections the figures differ from full or half mm, they may be rounded off to full or half millimetres up to 0,2 or 0,7; above 0,2 and 0,7 mm they are to be rounded up.

If plate thicknesses are not rounded up the thicknesses required must be shown in the drawings.

The section of profiles usual in trade and including the effective width according to G. may be 3 % less than the required values according to these Rules.

G. Effective Width of Plating

1. Girders, frames and stiffeners

1.1 The effective width of plating e_m of stiffeners, frames and girders may be determined according to Table 4.6 considering the type of loading.

Special calculations may be required for determining the effective width of one-sided or non-symmetrical flanges.

1.2 The effective area of plates is not to be less than the area of the face plate.

1.3 The effective width of stiffeners and girders subjected to compressive stresses may be determined according to H.2.2, but is in no case to be taken greater than determined by 1.1.

2. Cantilevers

Where cantilevers are fitted at every frame, the effective width of plating may be taken as the frame spacing.

Where cantilevers are fitted at a greater spacing the effective width of plating at the respective cross section may approximately be taken as the distance of the cross section from the point on which the load is acting, however, not greater than the spacing of the cantilevers.

Table 4.6 Effective width of plating e_m of frames and girders

ℓ/e	0	1	2	3	4	5	6	7	≥8
e_{m1}/e	0	0,36	0,64	0,82	0,91	0,96	0,98	1,00	1,0
em_2/e	0	0,20	0,37	0,52	0,65	0,75	0,84	0,89	0,9

e_{m1} is to be applied where girders are loaded by uniformly distributed loads or else by not less than 6 equally spaced single loads.

e_{m2} is to be applied where girders are loaded by 3 or less single loads.

Intermediate values may be obtained by direct interpolation.

ℓ = length between zero-points of bending moment curve, i.e. unsupported span in case of simply supported girders and 0,6 x unsupported span in case of constraint of both ends of girder

e = width of plating supported, measured from centre to centre of the adjacent unsupported fields

H. Proof of Buckling Strength

1. General

1.1 Calculation method

The calculation method for buckling strength used in the following is based on the standard DIN 18800.

1.2 Definitions

A_e = effective area for calculation of plastic section moduli [mm^2]

A_x, A_y = sectional area of longitudinal or transverse stiffeners respectively [mm^2]

a = length of single or partial plate field [mm]

b = breadth of single plate field [mm]

α = aspect ratio of single plate field

$$= \frac{a}{b}$$

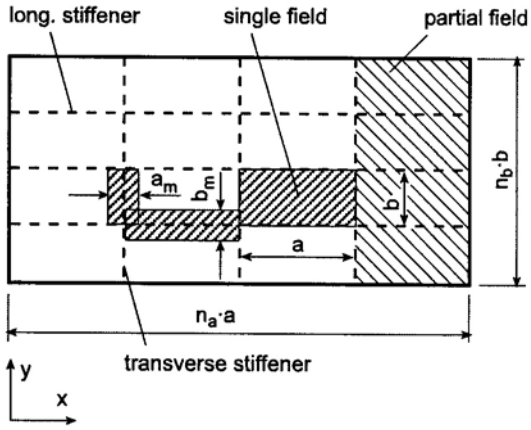

longitudinal : stiffener in the direction of the length a
transverse : stiffener in the direction of the breadth b

Figure 4.11 System of longitudinal and transverse stiffeners

c_s = factor accounting for the boundary conditions of the transverse stiffener

F_{kix}, F_{kiy} = ideal buckling force of longitudinal or transverse stiffeners [N]

f_p = ratio of plastic and elastic section modulus of the profile, see C.2.

h_{wx}, h_{wy} = web height [mm] of longitudinal or transverse stiffeners

I_{px}, I_{px} = polar moment of inertia of the stiffener related to the point C [cm^4], see Figure 4.12

I_{Tx}, I_{Ty} = St. Venant's moment of inertia [cm^4] for longitudinal or transverse stiffeners

I_x, I_y = moments of inertia [cm^4] of longitudinal or transverse stiffeners including effective width of plating according to 2.2

$I_{\omega x}$, $I_{\omega y}$ = sectorial moment of inertia of longitudinal or transverse stiffeners related to point C [cm^6], see Figure 4.12

W_{stx}, W_{sty} = section modulus of longitudinal or transverse stiffeners [cm^3] including effective width of plating

M_0 = bending moment due to deformation w_0 of longitudinal or transverse stiffeners [Nmm]

M_1 = bending moment due to lateral load p [Nmm]

n_a,nb = number of single plate field breadth within the partial or total plate field, see Figure 4.11

t = nominal plate thickness [mm]

= t_a-t_K [mm]

t_a = plate thickness as built [mm]

t_K = corrosion addition according to F.5. [mm]

t_{wx}, t_{wy} = web thickness [mm] of longitudinal or transverse stiffeners

w_0 = assumed imperfection [mm]

w_1 = deformation of stiffener due to lateral load p at midpoint of stiffener span [mm]

e = degree of restraint

κ = reduction factor for torsion

σ_x = membrane stress in x-direction [N/mm^2]

σ_y = membrane stress in y-direction [N/mm^2]

τ = shear stress in the x-y plane [N/mm^2]

Compressive and shear stresses are to be taken positive, tensile stresses are to be taken negative.

Note

If the stresses in the x- and y-direction contain already the Poisson - effect, the following modified stress values may be used:

$$\sigma_x = \frac{\sigma_x^* - 0{,}3 \cdot \sigma_y^*}{0{,}91}$$

$$\sigma_y = \frac{\sigma_y^* - 0{,}3 \cdot \sigma_x^*}{0{,}91}$$

σ_x^*, σ_y^* = stresses containing the Poisson-effect

Ψ = edge stress ratio according to Table 4.9

F1 = correction factor for boundary condition at the longitudinal stiffeners according to Table 4.7

σ_e = reference stress

$$= \frac{\pi^2}{12\left(1-\nu^2\right)} \cdot E \cdot \left(\frac{t}{b}\right)^2 \left[\mathrm{N/mm^2}\right]$$

E = modulus of elasticity [N/mm^2]

= for steel see Section 3, Table 3.1

= for aluminium alloys see Section 3, D.2.3

ν = Poisson ratio

= 0,3 for steel

= 0,33 for aluminium alloys

R_{eH} = minimum yield stress [N/mm^2] for hull structural steels according to Section 3, B.

= 0,2 % proof stress in [N/mm^2] for aluminium alloys according Section 3, D.

γ_m = partial safety factors according to Table 4.1

R_{eHpx}, R_{eHpy} = minimum yield stress [N/mm^2] of the profile in x- and y-direction respectively, see Table 4.11

λ = reference degree of slenderness:

$$\lambda = \sqrt{\frac{R_{eH}}{K \cdot \sigma_e}}$$

K = buckling factor according to Tables 4.9 and 4.10

In general, the ratio plate field breadth to plate thickness shall not exceed b/t = 100.

Table 4.7 Correction factor F_1 for boundary conditions

End form of stiffeners	Profile type	F_1
sniped at both ends or single side welded	all types	1,00 **(1)**
both ends are effectively connected to adjacent structures	flat bars	1,051 **(1)**
	bulb sections	1,101 **(1)**
	angle and tee sections	1,201 **(1)**
	girders of high rigidity, e.g. bottom transverses	1,301 **(1)**

(1) *only guidance values, exact values may be determined by direct calculations*

2. Single plate buckling

2.1 Proof is to be provided that the following condition is complied with for the single plate field a ·b:

$$\left(\frac{|\sigma_x|\cdot\gamma_m}{\kappa_x\cdot R_{eH}}\right)^{e_1}+\left(\frac{|\sigma_y|\cdot\gamma_m}{\kappa_y\cdot R_{eH}}\right)^{e2}-B\left(\frac{\sigma_x\cdot\sigma_y\cdot\gamma_m{}^2}{R_{eH}2}\right)$$
$$+\left(\frac{|\tau|\cdot\gamma_m\cdot\sqrt{3}}{\kappa_\tau\cdot R_{eH}}\right)^{e_3}\le 1{,}0$$

Each term of the above condition must be less than 1,0.

The reduction factors κ_X, κ_y and κ_T are given in Table 4.9 and/or 4.10.

Where $\sigma_x \le 0$ (tension stress), κ_X= 1,0.

Where $\sigma_y \le 0$ (tension stress), κ_y= 1,0.

The exponents e_1, e_2 and e_3 as well as the factor B are calculated or set respectively according to Table 4.8.

Table 4.8 Exponents e_1 - e_3 and factor B

Exponents e_1 - e_3 and factor B	plate field	
	plane	curved
e_1	$1+\kappa_x^4$	1,25
e_2	$1+\kappa_y^4$	1,25
e_3	$1+\kappa_x\cdot\kappa_y\cdot_\tau^2$	2,0
B σ_x and σ_y positive (compression stress)	$(\kappa_x\cdot\kappa_y)^5$	0
B σ_x or σ_y negative (tension stress)	1	—

2.2 Effective width of plating

The effective width of plating may be determined by the following formulae, see also Figure 4.11:

$b_m = \kappa_X \cdot b$ for longitudinal stiffeners

$a_m = \kappa_Y \cdot a$ for transverse stiffeners

The effective width of plating is not to be taken greater than the value obtained from G. 1.1.

Note

The effective width e'_m of the stiffed flange plates of girders may be determined approximately as follows:

Stiffening parallel to web of girder:

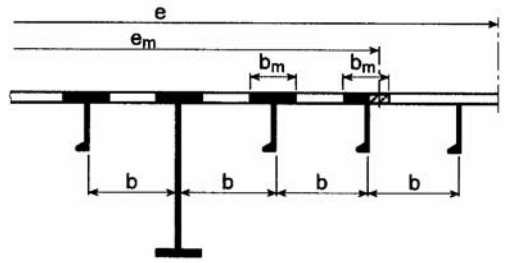

$b < e_m$

$e'_m = n \cdot b_m$

n = *integer number of the stiffener spacing b inside the effective width e_m according to Table 4.6.*

$$= \operatorname{int}\left(\frac{e_m}{b}\right)$$

stiffening perpendicular to web of girder:

$a \ge e_m$

$e'_m = n \cdot a_m < e_m$

$$n = 2{,}7\cdot\frac{e_m}{a}\le 1$$

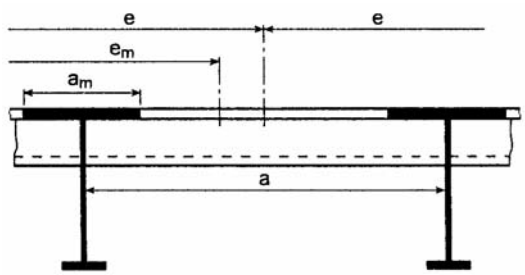

e = *width of plating supported according to G.1.1.*

For $b \ge e_m$ or $a < e_m$ respectively, b and a must be exchanged.

2.3 Webs and flanges

For non-stiffened webs and flanges of sections and girders proof of sufficient buckling strength as for single plate fields is to be provided according to 2.1.

Note

The following guidance values are recommended for the ratio web depth to web thickness and/or flange breadth to flange thickness for normal and higher strength hull structural steel:

$$flat\ bars: \frac{h_w}{t_w} \le \frac{215}{\sqrt{R_{eH}}}$$

angle-, tee and bulb sections:

$$web: \frac{h_w}{t_w} \le \frac{661}{\sqrt{R_{eH}}}$$

$$flange: \frac{b_i}{t_w} \le \frac{215}{\sqrt{R_{eH}}}$$

b_i = *b_1 or b_2 according to Figure 4.12, the larger value is to be taken.*

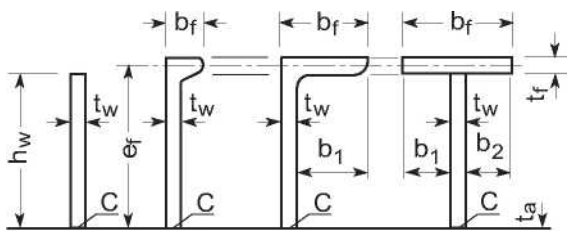

Figure 4.12 Main parameters of typical sections

3. Proof of partial and total fields

Proof is to be provided that the continuous longitudinal and transverse stiffeners of partial and total plate fields comply for lateral and torsional buckling with the conditions of Table 4.11.

The parameters of typical sections are shown in Figure 4.12 and the resulting moments of inertia are summarized in Table 4.12.

4. Column buckling

4.1 Definition of loads and geometric parameters

P_S = pillar load load [kN]

P_S = $p_L \cdot A + P_i$

= $\gamma_{fstat} \cdot P_{Sstat} + \gamma_{fdyn} \cdot P_{Sdyn}$

p_L = load on decks [kN/m^2] according to Section 5, F.

A = load area for one pillar [m^2]

Pi = load from pillars located above the pillar considered [kN]

ℓ_s = length of the pillar [cm]

I_S = moment of inertia of the pillar [cm^4] under consideration of effective width according to 2.2

A_S = effective sectional area of the pillar [cm^2]

A_H = effective sectional area of heads and heels considering hot spots [cm^2]

4.2 Buckling criterion

The chosen scantlings of a pillar have to meet the following buckling criterion:

$$\frac{\sigma_x \cdot \gamma_m}{\kappa \cdot R_{eH}} \le 1$$

σ_x = stress in longitudinal direction of the pillar [N/mm^2]

$$\sigma_x = P_S \cdot \frac{10}{A_S}$$

P_{Sstat} = static pillar load [kN]

P_{Sdyn} = dynamic pillar load [kN]

κ = reduction factor

$$= \frac{1}{\phi + \sqrt{\phi^2 - \lambda^2}}$$

$$\phi = 0{,}5 \cdot \left[1 + n_p \cdot (\lambda - 0{,}2) + \lambda^2\right]$$

n_p = 0,34 for pipes and box sections

= 0,49 for open sections

$$\lambda = \sqrt{\frac{R_{eH}}{\sigma_{ki}}} \qquad \lambda_{min} = 0{,}2$$

σ_{ki} = critical stress [N/mm^2]

$$= \frac{\pi^2 \cdot E \cdot I_S}{\ell_S{}^2 \cdot k_S{}^2 \cdot A_S}$$

E = modulus elasticity [N/mm^2]

k_s = 1,0 in general

= 0,7 for pillars with constrained ends which are supported in direction perpendicular to the pillar axis

4.3 Heads and heels

Structural members at heads and heels of pillars as well as substructures are to be constructed according to the forces they are subjected to. The connection is to be so designed that the following condition is met:

$$\frac{10 \cdot P_S}{A_H} \le \frac{R_{eH}}{\gamma_m}$$

Where pillars are affected by tension loads doublings are not permitted.

4.4 Pillars in tanks

Tubular pillars are not permitted in tanks for flammable liquids.

Table 4.9 Plane Plate Fields

Load case		Edge stress ratio ψ	Aspect ratio α	Buckling factor K	Reduction factor κ
1	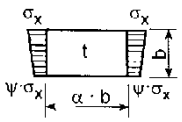	1≥Ψ ≥0 0>Ψ>-1 Ψ ≤ -1	α > 1	$K = \frac{8,4}{\Psi + 1,1}$ $K = 7,63 - \Psi(6,26 - 10\Psi)$ $K = (1 - \Psi)^2 \cdot 5,975$	$\kappa_x = 1$ for $\lambda \le \lambda_c$ $\kappa_x = c\left(\frac{1}{\lambda} - \frac{0,22}{\lambda^2}\right)$ for $\lambda > \lambda_c$ c =1,25-0,12 Ψ ≤ 12,5 $\lambda_c = \frac{c}{2}\left(1 + \sqrt{1 - \frac{0,88}{c}}\right)$
2	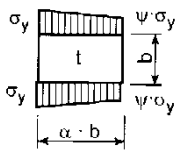	1≥Ψ≥0 0>Ψ>-1 Ψ ≤ -1	α ≥ 1 1≤ α≤1,5 α>1,5 $1 \le \alpha \le \frac{3(1-\Psi)}{4}$ $1 > \frac{3(1-\Psi)}{4}$	$K = F_1\left(1 + \frac{1}{\alpha^2}\right)^2 \frac{2,1}{(\psi + 1,1)}$ $K = F_1\left[\left(1 + \frac{1}{\alpha^2}\right)^2 \frac{2,1}{1,1}(1 + \Psi) - \frac{\Psi}{\alpha^2}(13,9 - 10\Psi)\right]$ $K = F_1\left[\left(1 + \frac{1}{\alpha^2}\right)^2 \frac{2,1}{1,1}(1 + \Psi) - \frac{\Psi}{\alpha^2}(5,87 + 1,87\alpha^2 + \frac{8,6}{\alpha^2} - 10\Psi)\right]$ $K = F_1\left(\frac{1 - \Psi}{\alpha}\right)^2 5,975$ $K = F_1\left[\left(\frac{1 - \Psi}{\alpha}\right)^2 3,9675 + 0,5375\left(\frac{1 - \Psi}{\alpha}\right)^4 + 1,87\right]$	$\kappa_y = c\left(\frac{1}{\lambda} - \frac{R + F^2(H - R)}{\lambda^2}\right)$ c=1,25 - 0,12 Ψ ≤12,5 $R = \lambda\left(1 - \frac{\lambda}{c}\right)$ for $\lambda < \lambda_c$ R =0,22 for $\lambda \ge \lambda_c$ $\lambda_c = \frac{c}{2}\left(1 + \sqrt{1 - \frac{0,88}{c}}\right)$ $F = \left(1 - \frac{\frac{K}{0,91} - 1}{\lambda_p^2}\right) c_1 \ge 0$ $\lambda_p^2 = \lambda^2 - 0,5$ $1 \le \lambda_p^2 \le 3$ c=1 For σ_y due to direct loads $c_1 = \left(1 - \frac{F_1}{\alpha}\right) \ge 0$ For σ_y due to bending (in general) $c_1 = 0$ For σ_y due to bending in extreme load cases (e.g. w.t. bulkheads) $H = \lambda - \frac{2\lambda}{c \cdot (T + \sqrt{T^2 - 4})} \ge R$ $T = \lambda + \frac{14}{15\lambda} + \frac{1}{3}$
3	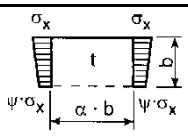	1≥Ψ≥ 0 0>Ψ≥-1	α > 0	$K = \frac{4(0,425 + 1/\alpha^2)}{3\Psi + 1}$ $K = 4\left(0,425 + \frac{1}{\alpha^2}\right)(1 + \Psi)$	

Table 4.9 Plane Plate Fields

Load case		Edge stress ratio ψ	Aspect ratio α	Buckling factor K	Reduction factor κ
				$-5\cdot\Psi(1-3{,}42\,\Psi)$	$\kappa_x = 1$ for $\lambda \le 0{,}7$
4	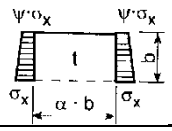	1≥Ψ≥-1	α > 0	$K = \left(0{,}425 + \frac{1}{\alpha^2}\right)\frac{3-\Psi}{2}$	$\kappa_x = \frac{1}{\lambda^2 + 0{,}51}$ for $\lambda > 0{,}7$
5	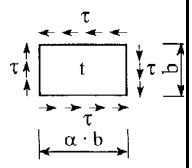	-	α ≥ 1 0< α < 1	$K = K_\tau \cdot \sqrt{3}$ $K_\tau = \left[5{,}34 + \frac{4}{\alpha^2}\right]$ $K_\tau = \left[4 + \frac{5{,}34}{\alpha^2}\right]$	$\kappa_\tau = 1$ for $\lambda \le 0{,}84$
6	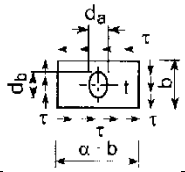	-		K=K' r K'= K acc. to load case 5 r = reduction factor $r = (1-\frac{d_a}{a})(1-\frac{d_b}{b})$ with $\frac{d_a}{a} \le 0{,}7$ and $\frac{d_b}{b} \le 0{,}7$	$\kappa_\tau = \frac{0{,}84}{\lambda}$ for $\lambda > 0{,}84$
7	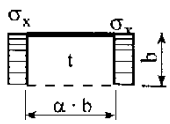	-	α ≥ 1,64 α < 1,64	K = 1,28 $K = \frac{1}{\alpha^2} + 0{,}56 + 0{,}13\,\alpha^2$	$\kappa_x = 1$ for $\lambda \le 0{,}7$ $\kappa_x = \frac{1}{\lambda^2 + 0{,}51}$ for $\lambda > 0{,}7$
8	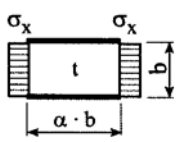	-	$\alpha < \frac{2}{3}$ $\alpha \ge \frac{2}{3}$	K = 6,97 $K = \frac{1}{\alpha^2} + 2{,}5 + 5\,\alpha^2$	$\kappa_x = 1$ for $\lambda \le 0{,}83$ $\kappa_x = 1{,}13\left[\frac{1}{\lambda} - \frac{0{,}22}{\lambda^2}\right]$ for $\lambda > 0{,}83$

Table 4.9 Plane Plate Fields

Load case		Edge stress ratio Ψ	Aspect ratio α	Buckling factor K	Reduction factor κ
9	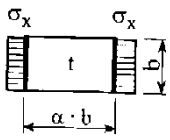	-	α ≥ 4 4> α > 1 α ≤ 1	K = 4 $K = 4 + \left[\frac{4-\alpha}{3}\right]^4 2{,}74$ $K = \frac{4}{\alpha^2} + 2{,}07 + 0{,}67\,\alpha^2$	$\kappa_x = 1$ for $\lambda \le 0{,}83$ $\kappa_x = 1{,}13\left[\frac{1}{\lambda} - \frac{0{,}22}{\lambda^2}\right]$ for $\lambda > 0{,}83$
10	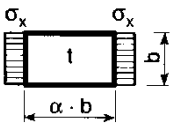	-	α ≥ 4 4 > α > 1 α ≤ 1	K = 6,97 $K = 6{,}97 + \left[\frac{4-\alpha}{3}\right]^4 3{,}1$ $K = \frac{4}{\alpha^2} + 2{,}07 + 4\,\alpha^2$	

Explanations for boundary conditions :

- - - - - - - - - - *plate edge free*

---------- *plate edge simply supported*

********** *plate edge clamped*

Table 4.10 Curved plate field R/t ≤ 2500 (1)

Load case		Aspect ratio b/R	Buckling factor K	Reduction factor κ
1a	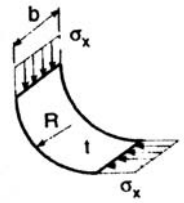	$\frac{b}{R} \le 1{,}63\sqrt{\frac{R}{t}}$	$K = \frac{b}{\sqrt{R \cdot t}} + 3\frac{(R \cdot t)^{0,175}}{b^{0,35}}$	$\kappa_x = 1$, **(2)** for $\lambda \le 0{,}4$ $\kappa_x = 1{,}274 - 0{,}686\lambda$ for $0{,}4 < \lambda \le 1{,}2$ $\kappa_x = \frac{0{,}65}{\lambda^3}$ for $\lambda > 1{,}2$
1b	with 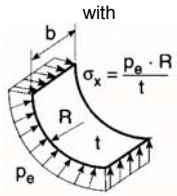 p_e = external pressure in [N/mm²]	$\frac{b}{R} > 1{,}63\sqrt{\frac{R}{t}}$	$K = 0{,}3\frac{b^2}{R^2} + 2{,}25\left(\frac{R^2}{b \cdot t}\right)^2$	
2	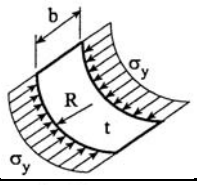	$\frac{b}{R} \le 0{,}5\sqrt{\frac{R}{t}}$ $\frac{b}{R} > 0{,}5\sqrt{\frac{R}{t}}$	$K = 1 + \frac{2}{3}\frac{b^2}{R \cdot t}$ $K = 0{,}267\frac{b^2}{R \cdot t}\left[3 - \frac{b}{R}\sqrt{\frac{t}{R}}\right]$ $\ge 0{,}4\frac{b^2}{R \cdot t}$	$\kappa_x = 1$, **(2)** for $\lambda \le 0{,}25$ $\kappa_y = 1{,}233 - 0{,}933\lambda$ for $0{,}25 < \lambda \le 1$ $\kappa_y = 0{,}3/\lambda^3$ for $1 < \lambda \le 1{,}5$ $\kappa_y = 0{,}2/\lambda^2$ for $\lambda > 1{,}5$
3	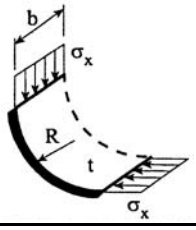	$\frac{b}{R} \le \sqrt{\frac{R}{t}}$ $\frac{b}{R} > \sqrt{\frac{R}{t}}$	$K = \frac{0{,}6 \cdot b}{\sqrt{R \cdot t}} + \frac{\sqrt{R \cdot t}}{b} - 0{,}3\frac{R \cdot t}{b^2}$ $K = 0{,}3\frac{b^2}{R^2} + 0{,}291\left(\frac{R^2}{b \cdot t}\right)^2$	as in load case 1a
4	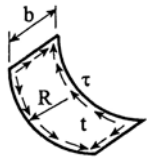	$\frac{b}{R} \le 8{,}7\sqrt{\frac{R}{t}}$ $\frac{b}{R} > 8{,}7\sqrt{\frac{R}{t}}$	$K = K_\tau \cdot \sqrt{3}$ $K_\tau = \left[28{,}3 + \frac{0{,}67 \cdot b^3}{R^{1,5} \cdot t^{1,5}}\right]^{0,5}$ $K_\tau = 0{,}28\frac{b^2}{R\sqrt{R \cdot t}}$	$\kappa_\tau = 1$, for $\lambda \le 0{,}4$ $\kappa_\tau = 1{,}274 - 0{,}686\lambda$ for $0{,}4 < \lambda \le 1{,}2$ $\kappa_\tau = \frac{0{,}65}{\lambda^2}$ for $\lambda > 1{,}2$

Explanations for boundary conditions : - - - - - - - - - - *plate edge free*

---------- *plate edge simply supported*

━━━━━━━━━━ *plate edge clamped*

(1) *For curved plate fields with a very large radius the κ value need not to be taken less than that one derived for the expanded plane field.*

(2) *For curved single fields. e.g. the bilge strake, which are located within plane partial or total fields, the reduction factor κ may taken as follows:*
Load case 1 b: $\kappa_p = 0{,}8/\lambda^2 \le 1{,}0$; *load case 2:* $\kappa_y = 0{,}65/\lambda^2 \le 1{,}0$

Table 4.11 Buckling conditions for longitudinal and transverse stiffeners

Longitudinal stiffeners	Transverse stiffeners
Elastic lateral buckling	
$\sigma_x + \frac{M_0 + M_1}{W_{stx} \cdot 10^3} \le \frac{R_{eHpx}}{\gamma_m}$	$\sigma_y + \frac{M_0 + M_1}{W_{sty} \cdot 10^3} \le \frac{R_{eHpy}}{\gamma_m}$
$M_0 = \frac{F_{kix} \cdot p_{zx}(w_0 + w_1)}{c_{fx} - p_{zx}}$ $F_{kix} = \frac{\pi^2}{a^2} E_p \cdot I_x \cdot 10^4$ $c_{fx} = \frac{\pi^2}{a^2} \cdot F_{kix}$ $p_{zx} = \frac{t_a}{b}\left[\left(\frac{\pi \cdot b}{a}\right)^2 \cdot \sigma_{x1} + 2 \cdot \sigma_{y1} + \sqrt{2} \cdot \tau_1\right]$	$M_0 = \frac{F_{kiy} \cdot p_{zy}(w_0 + w_1)}{c_{fy} - p_{zy}}$ $F_{kiy} = \frac{\pi^2}{(n_b \cdot b)^2} E_p \cdot I_y \cdot 10^4$ $c_{fy} = \frac{\pi^2}{(n_b \cdot b)^2} \cdot F_{kiy}$ $p_{zy} = \frac{t_a}{a}\left[2 \cdot \sigma_{x1} + \left(\frac{\pi \cdot a}{n_b \cdot b}\right)^2 \sigma_{y1} + \sqrt{2} \cdot \tau_1\right]$
$\sigma_{x1} = (1 + c_{Ax}) \frac{\left(\frac{t_a}{t} + n_{ex} \cdot c_{Ax}\right)\sigma_x - c_{px} \cdot R_{eH}}{1 + n_{ex} \cdot c_{Ax} - c_{px}} \ge 0$ $c_{Ax} = \frac{A_x}{t \cdot b}$ $\quad n_{ex} = \frac{n_b - 1}{n_b}$ $c_{px} = 1{,}9 \cdot c_{tx}(1 - 0{,}418 \cdot c_{tx})$ $c_{tx} = \frac{t}{n_b \cdot b}\sqrt{\frac{E}{R_{eH}}}$ $\quad c_{tx\,max} = 0{,}781$	$\sigma_{x1} = (1 + c_{Ax}) \frac{\left(\frac{t_a}{t} + n_{ex} \cdot c_{Ax}\right)\sigma_x - c_{px} \cdot R_{eH}}{1 + n_{ex} \cdot c_{Ax} - c_{px}} \ge 0$ $c_{Ax} = \frac{A_x}{t \cdot b}$ $\quad n_{ex} = \frac{n_b - 1}{n_b}$ $c_{px} = 1{,}9 \cdot c_{tx}(1 - 0{,}418 \cdot c_{tx})$ $c_{tx} = \frac{t}{n_b \cdot b}\sqrt{\frac{E}{R_{eH}}}$ $\quad c_{tx\,max} = 0{,}781$
$\sigma_{y1} = \sigma_y - c_{py} \cdot R_{eH} \ge 0$ $c_{py} = 1{,}9\, c_{ty}(1 - 0{,}418\, c_{ty})$ $c_{ty} = \frac{t}{a}\sqrt{\frac{E}{R_{eH}}}$ $\quad c_{ty\,max} = 0{,}781$	$\sigma_{y1} = (1 + c_{Ay}) \frac{\left(\frac{t_a}{t} + n_{ey} \cdot c_{Ay}\right)\sigma_y - c_{py} \cdot R_{eH}}{1 + n_{ey} \cdot c_{Ay} - c_{py}} \ge 0$ $c_{Ay} = \frac{A_y}{t \cdot a}$ $\quad n_{ey} = \frac{n_a - 1}{n_a}$ $c_{py} = 1{,}9\, c_{ty}(1 - 0{,}418\, c_{ty})$ $c_{ty} = \frac{t}{n_a \cdot a}\sqrt{\frac{E}{R_{eH}}}$ $\quad c_{ty\,max} = 0{,}781$
$\tau_1 = \tau - t\sqrt{R_{eH} \cdot E\left(\frac{m_1}{a^2} + \frac{m_2}{b_2}\right)} \ge 0$ $m_1 = 1{,}47 \quad m_2 = 0{,}49 \quad$ for $\frac{a}{b} \ge 2$ $m_1 = 1{,}96 \quad m_2 = 0{,}37 \quad$ for $\frac{a}{b} < 2$	$\tau_1 = \tau - t\sqrt{R_{eH} \cdot E\left(\frac{m_1}{a^2} + \frac{m_2}{b_2}\right)} \ge 0$ $m_1 = 0{,}37 \quad m_2 = \frac{1{,}96}{n_b^2} \quad$ for $\frac{a}{n_b \cdot b} \ge 0{,}5$ $m_1 = 0{,}49 \quad m_2 = \frac{1{,}47}{n_b^2} \quad$ for $\frac{a}{n_b \cdot b} < 0{,}5$
$\frac{a}{250} \ge w_0 \le \frac{b}{250} \quad w_0 \le 10\,\text{mm}$ $w_1 = \frac{p \cdot b \cdot a^4}{384 \cdot 10^7 \cdot E_p \cdot I_x}$ $M_1 = \frac{p \cdot b \cdot a^2}{24 \cdot 10^3}$	$\frac{a}{250} \ge w_0 \le \frac{b}{250} \quad w_0 \le 10\,\text{mm}$ $w_1 = \frac{5 \cdot p \cdot (n_b \cdot b)^4}{384 \cdot 10^7 \cdot E_p \cdot I_y \cdot c_s^2}$ $M_1 = \frac{p \cdot a \cdot (n_b \cdot b)^2}{8 \cdot 10^3 \cdot c_s}$

Table 4.11 Buckling conditions for longitudinal and transverse stiffeners (continued)

Longitudinal stiffeners	Transverse stiffeners
Torsinal buckling	
$\frac{\kappa_{Tx} \cdot R_{eHpx}}{\gamma_m} \geq \sigma_x$ $\kappa_{Tx} = 1 \quad \text{for} \quad \lambda_{Tx} \leq 0{,}2$ $\kappa_{Tx} = \frac{1}{\phi + \sqrt{\phi^2 - \lambda_{TX}^2}} \quad \text{for } \lambda_{Tx} > 0{,}2$ $\phi = 0{,}5\left[1 + 0{,}21(\lambda_{Tx} - 0{,}2) + \lambda_{Tx}^2\right]$ $\lambda_{Tx} = \sqrt{\frac{R_{eHpx}}{\sigma_{kiT}}}$	$\frac{\kappa_{Ty} \cdot R_{eHpy}}{\gamma_m} \geq \sigma_y$ $\kappa_{Ty} = 1 \quad \text{for} \quad \lambda_{Ty} \leq 0{,}2$ $\kappa_{Ty} = \frac{1}{\phi + \sqrt{\phi^2 - \lambda_{Ty}^2}} \quad \text{for } \lambda_{Ty} > 0{,}2$ $\phi = 0{,}5\left[1 + 0{,}21(\lambda_{Ty} - 0{,}2) + \lambda_{Ty}^2\right]$ $\lambda_{Ty} = \sqrt{\frac{R_{eHpy}}{\sigma_{kiT}}}$
$\sigma_{kiT} = \frac{E}{I_{px}}\left[\varepsilon \cdot \pi^2 \cdot I_{\omega x} \cdot \frac{10^2}{a^2} + 0{,}385 \cdot I_{Tx}\right]$ $\varepsilon = 1 + 10^{-4}\frac{a^2}{c_\varepsilon}$ $c_\varepsilon = \sqrt{I_{\omega x}\left(\frac{b}{t^3} + \frac{4 \cdot h_{wx}}{3 \cdot t_{wx}^3}\right)}$	$\sigma_{kiT} = \frac{E}{I_{py}}\left[\varepsilon \cdot \pi^2 \cdot I_{\omega y} \cdot \frac{10^2}{(n_b b)^2} + 0{,}385 \cdot I_{Ty}\right]$ $\varepsilon = 1 + 10^{-4}\frac{(n_b \cdot b)^2}{c_\varepsilon}$ $c_\varepsilon = \sqrt{I_{\omega x}\left[\frac{a}{t^3\left(1 + 10^4 \cdot \frac{I_x}{b}\right)^3} + \frac{4 \cdot h_{wy}\left(1 - \frac{h_{wx}}{b}\right)}{3 \cdot t_{wy}^3}\right]}$
Effective area A_e of compressed plate panels for the calculation of plastic section moduli stresses in x-direction	
$\kappa_{px} = c_1 - \sqrt{c_1^2 - c_2} \leq 1$ $c_1 = 0{,}5\left(1 + c_2 + \frac{F_{kix} \cdot w_0}{f_p \cdot W_{stx} \cdot 10^3 R_{eHpx}}\right)$ $c_2 = \frac{F_{kix}}{(t_a \cdot b + A_x) \cdot R_{eHp}}$	$\kappa_{px} = \frac{0{,}5 \cdot \pi^2 \cdot a \cdot c_s}{b \cdot n_b^2 (t_a \cdot b + A_x) \cdot c_1} \leq 1$ $c_1 = \frac{R_{eHpy}}{F_{kiy}} + \frac{w_0}{f_p \cdot W_{sty} \cdot 10^3}$
$A_{ex} = \kappa\left[n_b \cdot b \cdot t + A_x(n_b - 1)\right]$ κ is κ_x according to Table 4.9 which ever value is relevant and shall not be greater than κ_{Tx} respectively and not greater than κ_{px} for longitudinal or transverse stiffeners	
Effective area A_e of compressed plate panels for the calculation of plastic section moduli stresses in y-direction	
$\kappa_{py} = \frac{0{,}5 \cdot \pi^2 \cdot b}{t_a \cdot a^2 \cdot c_1} \leq 1$ $c_1 = \frac{R_{Ehpx}}{F_{kix}} + \frac{w_0}{f_p \cdot W_{stk} \cdot 10^3}$	$\kappa_{py} = c_1 - \sqrt{c_1^2 - c_2} \leq 1$ $c_1 = 0{,}5\left(1 + c_2 + \frac{F_{kiy} \cdot w_0}{f_p \cdot W_{sty} \cdot 10^3 \cdot R_{eHpy}}\right)$ $c_2 = \frac{F_{kiy} \cdot c_s}{(t_a \cdot a + A_y) \cdot R_{eHpy}}$
$A_{ey} = \kappa\left[n_a \cdot a \cdot t + A_y(n_a - 1)\right]$ *κ is κ_y according to Table 4.9 which ever value is relevant and shall not be greater than κ_{Ty} respectively and not greater than κ_{py} for longitudinal or transverse stiffeners*	

Table 4.12 Geometric properties of typical sections

Section	I_P	I_T	I_ω
Flat bar	$\frac{h_w^3 \cdot t_w}{3 \cdot 10^4}$	$\frac{h_w \cdot t_w^3}{3 \cdot 10^4}\left(1 - 0{,}63\frac{t_w}{h_w}\right)$	$\frac{h_w^3 \cdot t_w^3}{36 \cdot 10^6}$
Sections with bulb or flange	$\left(\frac{A_w \cdot h_w^2}{3} + A_f \cdot e_f^2\right)10^{-4}$	$\frac{h_w \cdot t_w^3}{3 \cdot 10^4}\left(1 - 0{,}63\frac{t_w}{h_w}\right)$ + $\frac{b_f \cdot t_f^3}{3 \cdot 10^4}\left(1 - 0{,}63\frac{t_f}{b_f}\right)$	for bulb and angle sections: $\frac{A_f \cdot e_f^2 \cdot b_f^2}{12 \cdot 10^6}\left(\frac{A_f + 2{,}6 A_w}{A_f + A_w}\right)$ for tee-sections: $\frac{b_f^3 \cdot t_f \cdot e_f^2}{12 \cdot 10^6}$
Web area A_w = $h_w \cdot t_w$ *Flange area* A_f = $b_f \cdot t_f$			

I. Structural Details

1. Longitudinal members

1.1 All longitudinal members taken into account for calculating the midship section modulus are to extend over the required length amidships and are to be tapered gradually to the required end scantlings, see also Section 6.

1.2 Abrupt discontinuities of strength of longitudinal members are to be avoided as far as practicable. Where longitudinal members having different scantlings are connected with each other, smooth transitions are to be provided.

1.3 At the ends of longitudinal bulkheads or continuous longitudinal walls suitable shifting brackets are to be provided.

2. Transverses and girders

2.1 Where transverses and girders fitted in the same plane are connected to each other, major discontinuities of strength shall be avoided. The web depth of the smaller girder shall, in general, not be less than 60 % of the web depth of the greater one.

2.2 The taper between face plates with different dimensions is to be gradual. In general the taper shall not exceed 1: 3. At intersections the forces acting in the face plates are to be properly transmitted.

2.3 For transmitting the acting forces the face plates are to be supported at their knuckles. For supporting the face plates of cantilevers, see Figure 4.13.

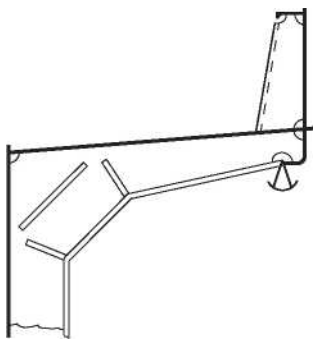

Figure 4.13 Support of the face plates of cantilevers

2.4 Upon special approval the stiffeners at the knuckles may be omitted if the following condition is complied with:

$$\sigma_a \le \frac{\sigma_p \cdot b_e}{b_f} \quad [N/mm^2]$$

σ_a = actual stress in the face plate at the knuckle [N/mm²]

σ_p = permissible stress in the face plate [N/mm²]

b_f = breadth of faceplate [mm]

b_e = effective breadth of faceplate

= $t_w + n_1 [t_f + c (b - t_f)]$ [mm]

t_w = web thickness [mm]

t_f = face plate thickness [mm]

$$b = \frac{b_f - t_f}{n_1} \quad [mm]$$

$$c = \frac{1}{\frac{(b - t_f)^2}{R \cdot t_f} - n_2} + \frac{n_3 \cdot t_f}{\alpha^2 \cdot R}$$

c_{max} = 1

2α = knuckle angle in [°], see Figure 4.15

α_{max} = 45°

R = radius of rounded face plates [mm]

= t_f for knuckled face plates

n_1 = 1 for unsymmetrical face plates (faceplate at one side only)

= 2 for symmetrical face plates

n_2 = 0 for face plates with one or two unsupported edges parallel to the web

$$= \frac{(b - t_f)^2}{R \cdot t_f} \le 1$$

for face plates of multi-web girders

n_3 = 3 if no radial stiffener is fitted

= 3 000 if two or more radial stiffeners are fitted or if one knuckle stiffener is fitted according to Figure 4.15

$$= \left(\frac{d}{t_f} - 8\right)^4$$

if one stiffener is fitted according to Figure 4.15

$3 \le n_3 \le 3\,000$

d = distance of the stiffener from the knuckle [mm]

For proof of fatigue strength of the weld seam in the knuckle, the stress concentration factor K_S (angle 2α according to Figure 4.15 < 35°) related to the stress σ_a in the face plate of thickness t_f may be estimated as follows and may be evaluated with case 5 of Section 17, Table 17.3:

$$K_S = \frac{t_f}{t_{f1}} \left[1 + \frac{6 \cdot n_4}{1 + \left(\frac{t_f}{t_{f1}}\right)^2} \cdot \tan \frac{2 \cdot \alpha \cdot t_{f1}}{R} \right]$$

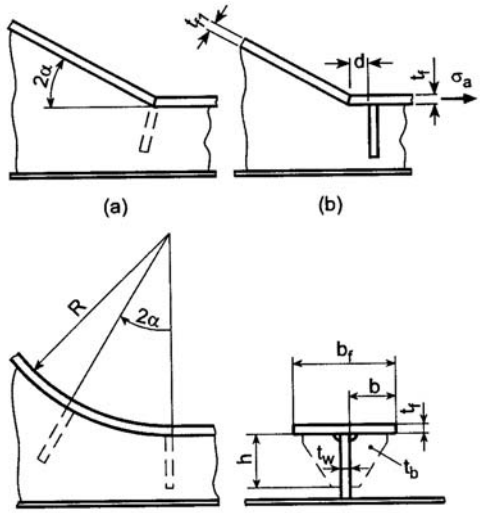

Figure 4.14 Location of stiffeners at knuckles

n_4 = 7,143 for $\frac{d}{t_f} > 8$

$$= \frac{d}{t_f} - 0{,}51\sqrt[4]{\frac{d}{t_f}} \quad \text{for } 8 \geq \frac{d}{t_f} > 1{,}35$$

$$= 0{,}5 \cdot \frac{d}{t_f} + 0{,}125 \quad \text{for } 1{,}35 \geq \frac{d}{t_f} > -0{,}25$$

Scantlings of stiffeners (guidance):

thickness: $t_b = \frac{\sigma_a}{\sigma_p} t_f \cdot 2\sin\alpha$

height: h = 1,5 · b

2.5 For preventing the face plates from tripping adequately spaced stiffeners or tripping brackets are to be provided. The spacing of these tripping elements shall not exceed 12 • b_f.

2.6 The webs are to be stiffened to prevent buckling.

2.7 The location of lightening holes shall be such that the distance from hole edge to face plate is not less than 0,3 times the web depth.

2.8 In way of high shear stresses lightening holes in the webs are to be avoided as far as possible.

3. Knuckles (general)

Flanged structural elements transmitting forces perpendicular to the knuckle, are to be adequately supported at their knuckle, i.e. the knuckles of the inner bottom are to be located above floors, longitudinal girders or bulkheads.

If longitudinal structures, such as longitudinal bulkheads or decks, include a knuckle which is formed by two butt-welded plates, the knuckle is to be supported in the vicinity of the joint rather than at the exact location of the joint. The minimum distance d to the supporting structure is to be at least.

$$d = 25 + \frac{t_f}{2}$$

but not more than 50 mm, see Figure 4.15.

4. Openings in highly loaded structures

4.1 Openings in highly loaded structures should have the shorter dimension transverse to the direction of the main stresses. The corners of the plate have to be rounded-off and avoiding notch effects, grinding will be necessary in most cases.

4.2 Superstructures and deckhouses

Superstructures with longitudinal walls immediately besides the shell are subjected - even for a very restricted length - to the same elongation as the hull. Therefore at the ends of these structures high longitudinal stresses as well as shear stresses are transferred to the longitudinal walls of superstructures and deckhouses. Fatigue strength investigations have to be made and submitted for approval.

5. Structures made of aluminium alloys

Special designs using extruded sections may be approved by TL after detailed examination. Drawings of the extruded sections used have to be submitted.

J. Evaluation of Notch Stress

1. Permissible notch stress

The notch stress σ_K roughly calculated for linear-elastic material behaviour at free plate edges, e.g. at openings in decks, walls, girders etc., should, in general, fulfil the following criterion:

$$\sigma_K \leq f \cdot R_{eH}$$

f = 1,1 for normal strength hull structural steel

= 0,9 for higher strength hull structural steel with R_{eH} = 315N/mm^2

= 0,8 for higher strength hull structural steel with R_{eH} = 355 N/mm^2

= 0,73 for higher strength hull structural steel with R_{eH} = 390 N/mm^2

For aluminium alloys the permissible notch stress has to be determined individually concerning the respective alloy.

If plate edges are free of notches and corners are rounded-off, a 20 % higher notch stress σ_K may be permitted.

A further increase of stresses may be permitted on the basis of a fatigue strength analysis as per Section 17.

2. Notch factors to evaluate actual notch stress

2.1 The actual notch stress can be determined by multiplying the nominal stress with the notch factor K_t.

For some types of openings the notch factors are given in Figs. 4.15 and 4.16. An exact evaluation of notch stresses is possible by means of finite element calculations.

Note

These notch factors can only be used for girders with multiple openings if there is no correlation between the different openings regarding deformations and stresses.

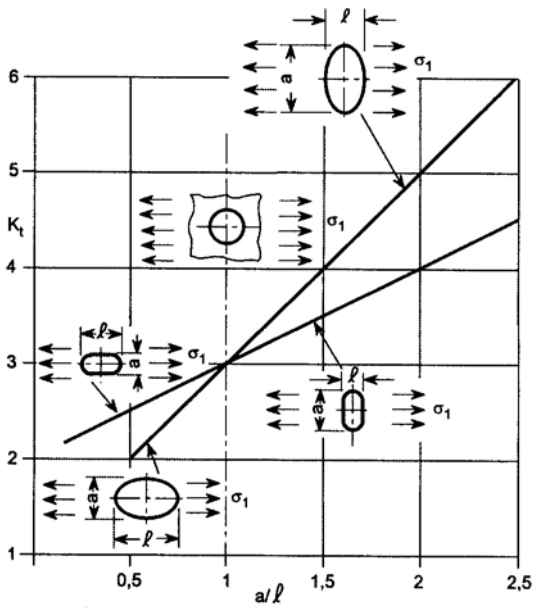

Figure 4.15 Notch factor K_t for rounded openings3. Openings in decks contributing to longi-tudinal strength

3.1 All openings in the decks contributing to longitudinal strength must have well rounded corners. Circular openings are to be edge-reinforced. The sectional area of the face bar is not to be less than:

A_f = 0,25 · d · t [cm^2]

d = diameter of openings [cm]

t = deck thickness [cm]

The reinforcing face bar may be dispensed with, where the diameter is less than 300 mm and the smallest distance from another opening is not less than 5 x diameter of the smaller opening. The distance between the outer edge of openings for pipes etc. and the ship's side is not to be less than the opening diameter.

3.2 The corners of the opening are to be sur-rounded by strengthened plates which are to extend over at least one frame spacing fore-and-aft and athwart-ships. Within 0,5 **L** amidships, the thickness of the strengthened plate is to be equal to the deck thickness abreast the opening plus the deck thickness between the openings. Outside 0,5 **L** amidships the thickness of the strengthened plate need not exceed 1,6 times the thickness of the deck plating abreast the opening.

3.3 The hatchway corner radius is not to be less than:

$$r = n \cdot b \cdot \left(1 - \frac{b}{B}\right)$$

r_{min} = 0,1m

$$n = \frac{\ell}{200}$$

n_{min} = 0,1

n_{max} = 0,25

ℓ = length of opening [m]

b = breadth [m], of the opening or total

breadth of openings in case of more than one. b/**B** need not to be taken smaller than 0,4

3.4 Where the hatchway corners are elliptic or parabolic, strengthening according to 3.2 is not required. The dimensions of the elliptical and parabolic corners shall be as shown in Figure 4.17.

Where smaller values are taken for a and c, reinforced insert plates are required which will be considered in each individual case.

3.5 For ships with very large deck openings the design of the corner of the openings has to be specially considered on the basis of the stresses due to longitudinal hull girder bending, torsion and transverse loads by direct calculations.

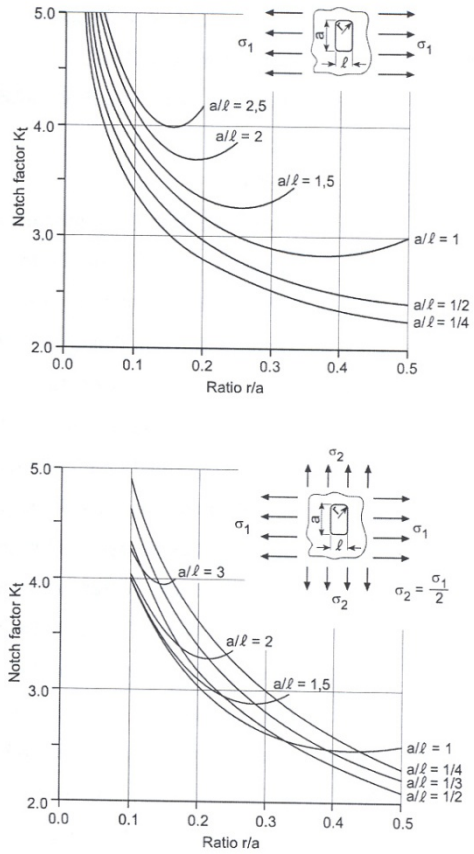

Figure 4.16 Notch factor K_t for rectangular openings with rounded corners at uniaxial state of stresses (above) and at biaxial-state of stresses (below)

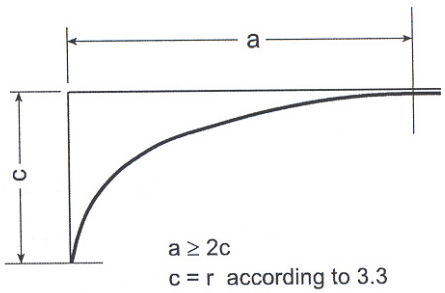

Figure ners

4. An exact distribution of notch stresses can be evaluated by means of finite element calculations.

For fatigue investigations the stress increase due to geometry of cut-outs has to be considered, see Section 17, Table 17.3.

K. Consideration of Vibration and Shock

1. Scope

The influence of vibrations on the habitability for the crew as well as the effect of vibrations on hull structures, electronic devices, main/auxiliary machinery and equipment is described in Section 16, C.

The safety margins regarding resonance of the natural frequencies of structures under investigation with the excitation frequencies is defined in 3.2.4.

Special aspects of vibration influence for certain areas of the hull structure are given in the following.

2. Vibration influences

2.1 Hull structures are normally subjected to vibration stresses. Design, construction and installation must in every case take account of these stresses, see Section 16, C. Fatigue considerations must be included.

2.2 Where a part of machinery or equipment generates vibrations when in operation, the intensity of the vibration shall not exceed defined limits. The

purpose is to protect the vibration generators, the connected assemblies, peripheral equipment and hull components from additional, excessive vibration stresses liable to cause premature failures or mal functions. Special attention has to be paid to the de sign of the foundation. If a resilient support is pro vided, it must be ensured that the foundation is of sufficient stiffness in order to achieve the desired isolation effects.

2.3 Particular attention is to be given to the ship's lines including the stern post, shaft brackets as well as to the minimisation of possible cavitation. With regard to bow shape consideration is to be given to limiting excitation from the seaway.

2.4 Resonance

2.4.1 For a naval ship it is essential that under the operating conditions encountered most frequently, resonance vibrations of the ship hull and individual components are avoided as far as possible.

2.4.2 The calculated natural frequencies of the structures under investigation have to be put into relation to the excitation frequencies in a resonance diagram.

Note

The frequencies of the excitation sources shall be beyond a range of ± 15 % from the critical natural frequencies, if detailed analysis models are used a safety margin of ±10% may be used. Figure 4.18 shows an example. If the excitation forces are created by the propulsion devices/propellers, resonance must be avoided especially for the rpm corresponding to:

- *standard cruising speed v_M*
- *maximum speed v_0*

3. Shock strength

As it is reasonable to integrate shock strength in noise and vibration considerations aspects of shock loads and effects are treated in detail in Section 16, D.

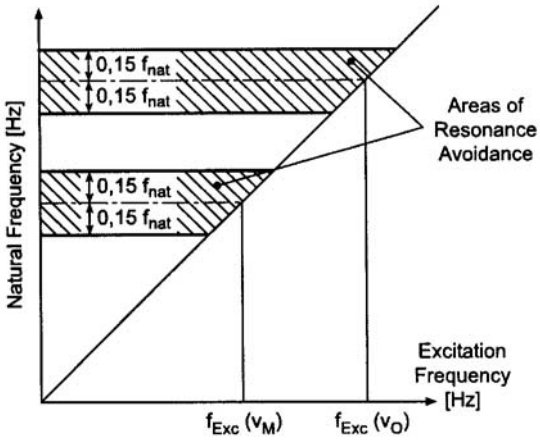

Figure 4.18 Resonance diagram

4. Noise

4.1 Suitable precautions have to be taken to keep noise as low as possible, particularly radiated-noise of the naval ship, but also in the operation centers, in the crew's quarters and other working spaces, see also Section 16, B.

Attention is to be drawn to regulations concerning noise level limitations defined by the Naval Authority in the building specification.

Note

TL may be entrusted to review the general arrangement plan prior to detailed investigations with regard to noise. Upon request a noise analysis can be conducted and the prediction compared with the specified criteria. On basis of the prediction TL will provide then a planning report with specified limits for airborne and structure-borne noise of machinery and equipment. This report will contain a list of measures to be applied, e.g. the need for elastically supported machinery, insulation, etc. The structure and airborne noise limit curves given in this report must be guaranteed by the shipyard, manufacturers and other sub-suppliers.

TL is prepared to carry out detailed impedance investigations of machinery foundations, of the shell above the propeller and of other critical areas means of detailed local finite element models of the relevant areas.

These investigations should be conducted as soon as the preliminary scantlings of the structures are determined. The objective of these calculations is to ensure minimisation of the structure-borne noise flow through the ship's structure.

SECTION 5

DESIGN LOADS

A. General, Definitions

1. Scope

1.1 This Section provides specifications for design loads to determine scantlings of hull structural elements. These design loads may be obtained from design formulas given in other Sections or from direct calculations. The dynamic portions of these design loads may be applied only within the design concept of this Chapter.

In addition to environmental loads and loads from normal ship operation, military loads are defined. Basic load values for military loads are given in H. For military loads, the Naval Authority must supply the necessary details to the shipyard and the subcontractors.

1.2 Loads defined in this Section are valid for monohull, displacement kind of naval ships.

1.3 These loads may also be applied to other kinds of naval ships classed with TL according to mutual agreement.

1.4 All static design loads given in this Section are minimum loads, and they may be increased according to the load plan.

2. Load plan

2.1 All loads significant for design of the hull structure shall be incorporated into a load plan. This should be done in a clearly arranged form. For conversions of naval ships, a plan showing the differing new loads shall be submitted.

2.2 If structural elements are loaded by different kinds of loads, realistic combinations of these loads have to be considered for the design.

2.3 The load plan shall at least contain the following information:

- Principle dimensions of the ship
- Dynamic loads p_S on sea and weather exposed structures
- Accelerations
- Wind pressure and data of tanks
- Static deck loads, such as uniform distributed loads, point loads, etc.

3. Definitions

c_0 = wave coefficient

$$= \left(\frac{\mathbf{L}}{25} + 4{,}1\right) \cdot c_{RW} \quad \text{for } \mathbf{L} < 90\,\text{m}$$

$$= \left[10{,}75 - \left(\frac{300 - \mathbf{L}}{100}\right)^{1{,}5}\right] \cdot c_{RW}$$

for 90 ≤ **L** ≤ 300 m

= 10,75 · c_{RW} for **L** > 300 m

c_v = velocity coefficient

$$= \sqrt[3]{\frac{v_0}{1{,}6 \cdot \sqrt{\mathbf{L}}}} \geq 1 \text{ and } 1{,}6 \cdot \sqrt{\mathbf{L}} \geq 14$$

c_{RW} = service range coefficient

c_{RW} = 1,0 for unlimited service range
= 0,90 for restricted service area **Y**
= 0,75 for restricted service area **K50**
= 0,66 for restricted service area **K20**
= 0,60 for restricted service area **K6**

for restricted service to be determined on a case by case basis, see also Chapter 101 - Classification and Surveys (Naval Ship Technology), Section 2, C.

c_α = flare factor 0,4

$$= \frac{0{,}4}{1{,}2 - 1{,}09 \cdot \sin\alpha} \text{ in general}$$

≥ 1,0 for bow doors and stem structures

= 0 for decks and walls

α = flare angle [°], see Fig. 5.2

g = acceleration of gravity

= 9,81 m/s^2

γ_{fstat} = partial safety factor for static load components, see Section 4, Table 4.1

γ_{fdyn} = partial safety factor for dynamic load components, see Section 4, Table 4.1

p_{BK} = pressure on bilge keel [kN/m^2] according to C.3.1

p_c = static service load [kN/m^2] according to F.1. 1

p_{dw} = deadweight load of the structures [kN/m^2] according to I.4.

p_e = design impact pressure [kN/m^2] forward of $\frac{x}{L} = 0,6$ according to C.2.

P_E = single point load [kN] according to F.2.

p_L = load on internal decks [kN/m^2] according to F.4

P_{NWT} = static load on non-watertight partitions [kN/m^2] according to D.2.

p_S = design pressure [kN/m^2] sea and/or weather exposed structures according to C.1.

p_{T1} = design pressure for tanks [kN/m^2] according to G.1.

Δp = additional pressure component [bar] created by overflow systems according to G. 1.1

p_W = design wind pressure [kN/m^2] according to E.2.

p_{WT} = design load on watertight partitions [kN/m^2] according to D.1.

ρ = density of sea water

= 1,025 t/m^3

B. Design Values of Acceleration Components

1. Acceleration components

The following formulas may be taken for guidance to calculate acceleration components a_x, a_y and a_z owing to ship motions. These acceleration components are maximum dimensionless accelerations (i.e., relative to the acceleration of gravity) in the respective x-, y- and z-directions and account for the following motion components:

Vertical acceleration (perpendicular to the base line) due to heave and pitch motions:

$$a_z = \pm a_0 \sqrt{1 + \left(5,3 - \frac{45}{L}\right)^2 \left(\frac{x}{L} - 0,45\right)^2 \left(\frac{0,6}{C_B}\right)^{1,5}}$$

Transverse acceleration due to sway, yaw and roll motions, including the gravity component of roll:

$$a_y = \pm a_0 \sqrt{0,6 + 2,5\left(\frac{x}{L} - 0,45\right)^2 + k\left(1 + 1,06 \cdot k \frac{z - T}{B}\right)^2}$$

Longitudinal accerelation due to surge and pitch motions, including the gravity component of pitch:

$$a_x = \pm a_0 \cdot \sqrt{0,06 + A^2 - 0,25 \cdot A}$$

$$A = \left(0,7 - \frac{L}{1200} + 5 \cdot \frac{z - T}{L}\right) \cdot \frac{0,6}{C_B}$$

$$a_0 = \left(0,2 \cdot \frac{v_0}{\sqrt{L_0}} + \frac{3 \cdot c_0}{L_0}\right) \cdot f$$

L_0 = length of ship L [m]; length L_0 need not be less than 100 m

$$k = \frac{13 \cdot \overline{GM}}{B}$$

$\overline{GM}$ = metacentric height [m]

k_{min} = 1,0

f = probability factor depending on probability level Q as outlined in Table 5.1

Table 5.1 Probability factor

Probability level Q	Probability factor f
10^{-8}	1,000 **(1)**
10^{-7}	0,875
10^{-6}	0,750
10^{-5}	0,625 **(2)**
10^{-4}	0,500

(1) *to be used for fixed elements, such as masts, etc.*
(2) *to be used for military cargo, loose equipment, content of tanks, etc.*

a_x, a_y, a_z are considered as acting separately for calculation purposes.

In special cases, it is recommended to determine the accelerations by direct calculation.

2. Combined acceleration

The combined acceleration a_β may be determined by means of the "acceleration ellipse" according to Fig. 5.1 (e.g., y-z plane).

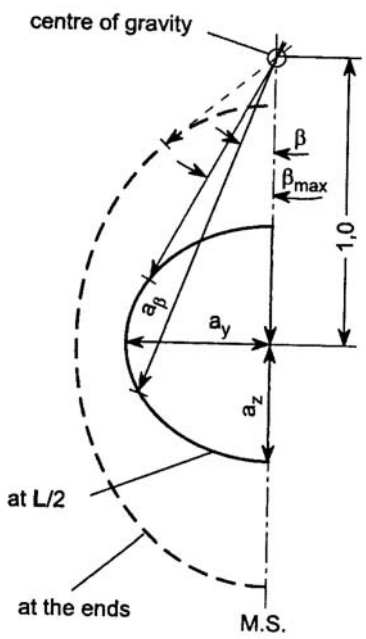

Fig. 5.1 Acceleration ellipse in the y-z plane of the ship

C. External Sea Loads

1. Load on ship's bottom, sides and decks

1.1 Load on ship's sides and bottom

The external load p_S on the ship's sides and bottom is to be determined according to 1.1.1 and 1.1.2. The definitions for the different parts of the ship exposed to sea loads are given in Fig. 5.2.

1.1.1 Static load

The static load [kN/m^2] for z ≤ T is determined by:

P_{Sstat} = 10 · (**T** – z)

1.1.2 Dynamic loads

The dynamic pressure [kN/m^2] at the load centre of side elements is defined as follows:

- load centre located below the design waterline (0 ≤ z ≤ T):

$$p_{Sdyn} = p_0 \cdot c_F \cdot \left[1 + \left(\frac{z}{\mathbf{T}}\right)^{0,75}\right]$$

- load centre located above the design waterline (z > T):

$$p_{Sdyn} = p_0 \cdot c_F \cdot \left[0,25 + \frac{1,75}{1 + \frac{z - \mathbf{T}}{c_0}}\right] \cdot n_1 \cdot n_2 \cdot n_3$$

p_0 = basic external dynamic load

$$p_0 = 5,0 \cdot \sqrt{C_B} \cdot c_0 \cdot c_v^{\,2} \ [\mathrm{kN/m^2}]$$

c_F = distribution factor according to Table 5.2

c_Z = height factor according to Table 5.2, to be used to define the distribution factor c_Z

Coefficients n_1, n_2 and n_3 for different elements of the ship's surface are defined in Table 5.3.

The following minimum values have to be observed:

$p_{Sdynmin}$ = 4,0 kN/m^2 for weather decks in general and unprotected front walls

$p_{Sdynmin}$ = 2,5 kN/m^2 for observation decks

$p_{Sdynmin}$ = 3,0 kN/m^2 for walls, except unprotected front walls

1.1.3 Total load

The total load p_S is:

$p_S = p_{Sstat} \cdot \gamma_{fstat} \pm p_{Sdyn} \cdot \gamma_{fdyn}$ [kN/m^2]

1.2 Load on weather decks

1.2.1 The load on weather decks is calculated according to 1.1 at the minimum height z of the deck.

1.2.2 Where additional loads, such as vehicles, helicopters, mines, general stowage, etc. are intended to be carried on the weather deck, the relevant combination of these loads as defined below is to be determined.

2. Design impact pressure for x/L ≥ 0,6

2.1 Forward of x/**L** = 0,6 the design impact pressure on the ship's shell is to be determined according to the following formula:

$$p_e = C_A \cdot c_\alpha \cdot c_{SL} \cdot \left(0{,}2 \cdot v_0 + 0{,}6 \cdot \sqrt{\mathbf{L}}\right)^2 \ \left[\mathrm{kN/m^2}\right]$$

$$C_A = 1 + \frac{5}{A} \quad C_{Amax} = 2$$

A = loaded area [m^2] between the supports of the structure considered

c_{SL} = distribution factor, see also Fig. 5.3

$$c_{SL} = 4 \cdot \left(\frac{x}{\mathbf{L}} - 0{,}6\right) \ \text{for } 0{,}6 \le \frac{x}{\mathbf{L}} \ge 0{,}85$$

$$c_{SL} = 1{,}0 \ \text{for } \frac{x}{\mathbf{L}} \ge 0{,}85$$

Table 5.2 Distribution factor c_F, height factor c_z and factor n_4

Region	Factor c_F	Factor c_Z	Factor n_4
$0 \le \frac{x}{\mathbf{L}} < 0{,}25$	$1 + \frac{6 + c_\alpha^2}{1 + 3\,C_B} \cdot \left(0{,}25 - \frac{x}{\mathbf{L}}\right) - c_z \ge 1$	$\frac{z - \mathbf{T}}{c_o} - 0{,}5 \ge 0$	$0{,}75 + \frac{x}{\mathbf{L}}$
$0{,}25 \le \frac{x}{\mathbf{L}} < 0{,}7$	1,0	-	1,0
$0{,}7 \le \frac{x}{\mathbf{L}} \le 0{,}9$	$1 + \frac{33 + (c_\alpha + c_v)^2}{C_B} \cdot \left(\frac{x}{\mathbf{L}} - 0{,}7\right)^2 - c_z \ge 1$	$\frac{z - \mathbf{T}}{c_o} - 1{,}0 \ge 0$	$3{,}94 - 4{,}2 \cdot \frac{x}{\mathbf{L}}$
$0{,}9 \le \frac{x}{\mathbf{L}} < 1{,}0$	Value obtained for $\frac{x}{\mathbf{L}} = 0{,}9$		

Table 5.3 Definition of n_1, n_2 and n_3

Surface element	Factor n_1	Factor n_2	Factor n_3
Shell	1,0	1,0	1,0
Weather decks and side walls	$1-(z-0{,}02\mathbf{L}-0{,}5-\mathbf{T})\cdot\frac{n_4}{c_0}\le 1$	$0{,}3+0{,}7\frac{b'}{B'}$	1,0
Unprotected front walls			$2+\frac{\mathbf{T}-z+3{,}5}{0{,}02\mathbf{L}+1}\ge 1$
Protected front walls			1
Aft end walls			$1-\left(\frac{x}{\mathbf{L}}\right)^2\ge 0{,}6$

n_4 see Table 5.2
b' = breadth of superstructure or deckhouse at position considered
B' = actual maximum breadth of ship on the exposed weather deck at position considered

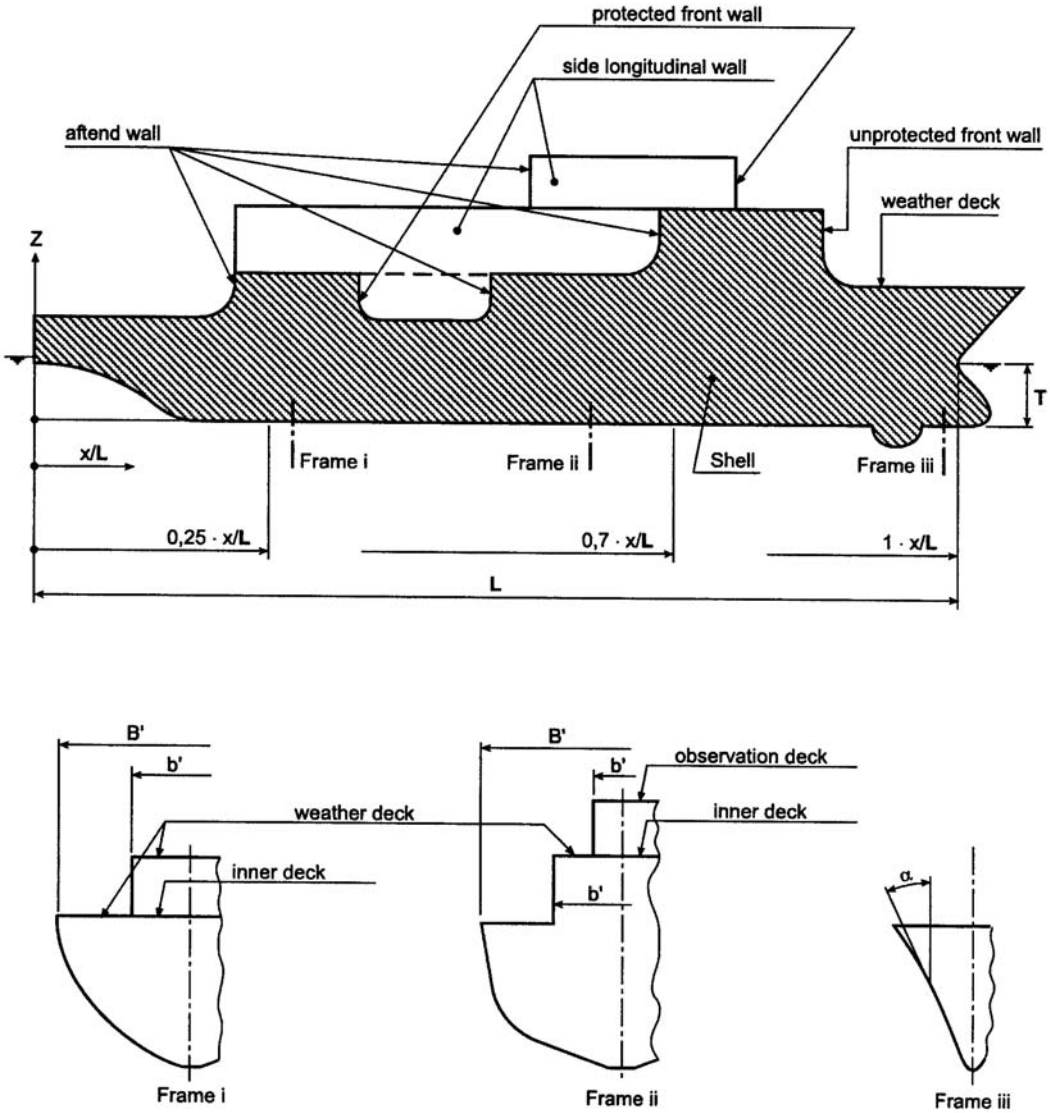

Fig. 5.2 Definition of different parts of the ship's surface exposed to the sea

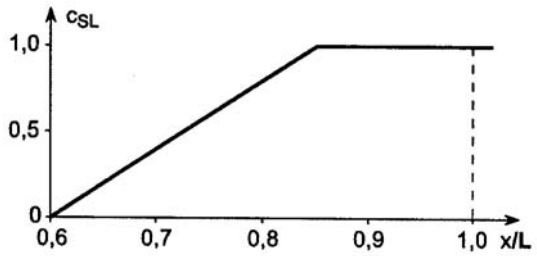

Fig. 5.3 Distribution factor c_{SL}

2.2 For the design of the shell structure, p_e shall not be less than p_s according to 1.1.3.

3. Design loads on bilge keels and sonar domes

3.1 Loads on bilge keels

For ships with length **L** between 50 m and 200 m, the design load p_{BK} acting on the bilge keel (Fig. 5.4) located between 0,4 **L** and 0,6 **L** can be calculated as follows:

$$p_{BK} = p_{BKdyn} \cdot \gamma_{fdyn} \quad \left[kN/m^2\right]$$

$$p_{BKdyn} = \frac{52000 \cdot \rho}{(L + 240)^{1,1}} \left[kN/m^2\right]$$

For ship lengths below 50 m and above 200 m, the loads on bilge keels have to be specially considered.

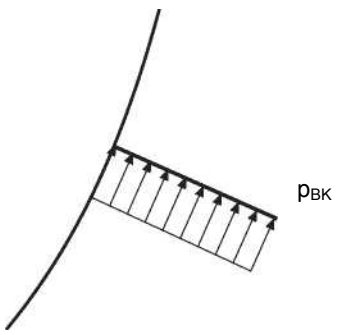

Fig. 5.4 Design load p_{BK} at bilge keel

3.2 Load on sonar domes

The loads on a sonar dome in the forward bottom area of a ship have to be determined by combining the following load components:

- Static load on the ship's bottom according to 1.
- Impact pressure according to 2.
- Internal static pressure from water filling the sonar dome
- Internal dynamic pressure (static pressure multiplied with the vertical acceleration component)
- Hydrodynamic pressure at maximum ahead speed v_{max} and in the turning manoeuvre respectively to be obtained from calculations or model tank tests

4. Loads on propulsion and manoeuvring devices

In addition to requirements for propeller brackets, rudders and manoeuvring devices as documented in the relevant Sections, it must be proven that these parts are able to withstand the shock loads defined by the Naval Authority.

D. Loads on Watertight and Non-Watertight Partitions

1. Watertight partitions

1.1 Static load

The static load is:

$$p_{WTstat} = g \cdot \rho \cdot (T_{dam} - z) \quad \left[kN/m^2\right]$$

T_{dam} = draught for the extreme damage waterline [m]. For ships without proven damage stability, the height of the bulkhead deck above baseline has to be used.

For the collision bulkhead, the distance of the upper edge of the collision bulkhead at the ship's side to the base line has to be used.

z = distance from the load centre of the structure to the base line [m]

For the definition of load centre see Section 4, B.3.1.

1.2 Dynamic load (quasi-static)

The dynamic load is:

$p_{WTdyn} = g \cdot \rho$ [kN/m^2]

1.3 Total load

The total design load for watertight bulkheads is:

$p_{WT} = p_{WTstat} \cdot \gamma_{fstat} + p_{WTdyn} \cdot \gamma_{fdyn}$ [kN/m^2]

2. Non-watertight partitions

The static load P_{NW_T} is to be defined by the Naval Authority or the Shipyard, but shall not be less than:

$P_{NWT} = 2$ kN/m^2

3. Additional loads

In addition, static and dynamic loads from equipment mounted on bulkheads and walls have to be considered.

E. Wind Loads

1. General

Wind loads are to be considered for strength analysis of extremely exposed parts of the ship, such as masts, as well as for the stability of the ship and for flight operations, etc.

Maximum wind speeds, air density, etc. have to be agreed on with the Naval Authority according to the area of operation of the naval ship. In the following Sections standard values are provided.

2. Wind force

$F_w = q_W \cdot c_f \cdot A_W \cdot \gamma_{fdyn}$ [kN]

q_W = wind pressure

= $0{,}5 \cdot \rho_L \cdot v_w^2$ [kN/m^2]

ρ_L = density of air [t/m^3]

v_W = wind speed [m/s], see Section 1, Table 1.2

g = acceleration of gravity

= 9,81 m/s

c_f = form coefficient

A_W = projected area exposed to wind forces [m^2]

γ_{fdyn} = partial safety factor for dynamic load components, see Section 4, Table 4.1

Note:
For plane areas the form coefficient may be assumed to be $c_f = 1{,}0$; for rounded areas, the coefficient may be assumed to be $c_f = 0{,}6$.

The water content in the air may increase the air density ρ_L by about 30 percent.

F. Load on Internal Decks

1. Uniformly distributed loads

1.1 Static loads

The load on internal decks due to pallets, mines, etc. is to be determined as a uniformly distributed load.

p_c = static service load [kN/m^2].

If no specific load of equipment or provisions, etc. is given, $p_c = 7 \cdot h$ for 'tween decks, but not less than 15 kN/m^2.

h = mean height of internal deck [m]

1.2 Dynamic loads

The dynamic load is not to be less than

$p_{Ldyn} = p_c \cdot a_z$ [kN/m^2]

a_z = acceleration component in z-direction according to B.1.

1.3 Total load

The total load consists of static and dynamic components.

$p_L = p_c \cdot \gamma_{fstat} + p_{Ldyn} \cdot \gamma_{fdyn}$ [kN/m^2]

2. Single point loads

2.1 Static loads

2.1.1 Containers

p_{Estat} [kN] is to be taken as one-forth of total weight.

2.1.2 Vehicles with tyres

The maximum pressure is equivalent to the internal air pressure in the tyres. Axle and wheel spacing and tyre print dimensions have to be taken into account at all traffic lanes.

$$p_{Estat} = \frac{Q}{n} \left[kN\right]$$

Q = axle load of a vehicle [kN]
for Q total weight of a fork lift truck to be taken

n = number of wheels or twin wheels per axle

$$f = 100 \cdot \frac{P_{Estat}}{p} \left[cm^2\right]$$

The wheel print area f can be estimated as follows:

p = specific wheel resp. tyre pressure [bar]. If no special information is available, the values defined in Table 5.4 may be used.

2.1.3 Armoured tracked vehicles

For armoured, tracked vehicles, Q is the half weight of the vehicle. The "wheel print" is given by the length and width of the chains touching the deck and has to be defined by the Naval Authority. The load can be assumed as uniformly distributed on this area. The ranges of total weight and specific pressure are defined in Table 5.5. Special attention is to be paid to the upper edge of internal ramps because, as the vehicle passes this edge, its total weight will be concentrated on this edge.

Table 5.4 Specific wheel pressures for different kinds of vehicles

Kind of vehicle	Specific wheel pressure [bar]	
	Pneumatic tyres	Solid rubber tyres
Personnel carrier	2	-
Trucks	8	-
Trailers	8	15
Fork lift trucks	6	15

Table 5.5 Total weight and specific pressure of armoured, tracked vehicles

Kind of armoured, tracked vehicle / tank	Range of total weight [kN]	Specific track pressure [kN/m^2]
Armoured personnel carriers	150-250	65
Light tanks	300-450	80
Armoured howitzers	250-400	90
Battle tanks	450-700	90

2.2 Dynamic loads

The dynamic load is:

$P_{Edyn} = P_{Estat} \cdot a_z$ [kN]

a_z = acceleration component in z-direction according to B.1.

2.3 Total load

The total load consists of static and dynamic components.

$P_E = E_{Estat} \cdot \gamma_{fstat} + E_{dyn} \cdot \gamma_{fdyn}$ [kN]

3. Ammunition rooms

An additional load for the structures of ammunition depots is to be considered to account for the case of a defective overflow piping system. If ammunition rooms are sprayed according to Chapter 107 - Ship Operation Installations and Auxiliary Systems, Section 9, N, the complete space may finally be filled with water. Therefore, an internal water pressure has to be considered, corresponding to the height of the ceiling plus 1,0 m. Only if the ceiling of the depot extends to the weather deck, a pressure equivalent to the height of the space considered must be accounted for.

If the Naval Authority designates these depots and the stowage equipment therein as important for survival, their structure shall withstand shock loads as defined by the Naval Authority; see also Section16, D.

4. Loads on accommodation and service decks

4.1 Static loads

The following loads are minimum values. These loads may be higher, depending on the definitions in the load plan.

The static uniform deck load is:

$P_{Lstat} = 3$ kN/m^2

The minimum static point load is:

$P_{Estat} = 1,5$ kN

4.2 Dynamic loads

The dynamic uniform deck load is:

$P_{Ldyn} = 3 \cdot a_z$ [kN/m^2]

The dynamic point load is:

$P_{Edyn} = 1,5 \cdot a_z$ [kN]

a_z = acceleration component in z-direction according to B.1.

4.3 Total load

The total uniform deck load is:

$p_L = p_{Lstat} \cdot \gamma_{fStat} + p_{Ldyn} \cdot \gamma_{fdyn}$ [kN / m^2]

The total point load is:

$p_E = p_{Estat} \cdot \gamma_{stat} + p_{Edyn} \cdot \gamma_{fdyn}$ [kN]

5. Loads on machinery decks

5.1 Static loads

The following loads are minimum values. These loads may be higher, depending on the definitions in the load plan.

The uniform static deck load is:

$p_L = 4$ kN/m^2

The minimum static point load is:

$P_E = 3$ kN

5.2 The dynamic loads and the total load are to be defined in analogous way as in 4.2 and 4.3.

G. Loads on Tank Structures

1. Design pressure p_{T1}

1.1 Static pressure

The static pressure is:

$p_{T1stat} = g \cdot h_1 \cdot \rho + 100 \cdot \Delta p$ [kN/m^2]

h_1 = distance of load centre from tank top [m]

ρ = density of tank liquid [t/m^3]

Δp = additional pressure component created by overflow systems, replenishment at sea (see 3.), etc. [bar]

For fuel tanks and ballast tanks connected to an overflow system, the dynamic pressure increases due to

overflowing and has to be taken into account in addition to the static pressure. The static pressure corresponds to a pressure height extending up to the highest point of the overflow system; see also TL Rules - Guidelines for Construction, Equipment and Testing of Closed Fuel Overflow Systems.

1.2 Dynamic pressure

The dynamic pressure is:

$p_{T1dyn} = g \cdot h_1 \cdot \rho \cdot a_z$ [kN/m^2]

a_Z = vertical acceleration component according to B.1.

1.3 Total pressure

The total pressure is:

$p_{T1} = p_{T1stat} \cdot \gamma_{fstat} + p_{T1dyn} \cdot \gamma_{fdyn}$ [kN/m^2]

1.4 Reference is made to the test pressure p_{T2} according to Section 10, D.

2. Ballast tank operations

Ballast tank operations for Dock Landing Ships (LHD and LSD) and Landing Ships (LST) have to be specially considered on the basis of the requirements when launching and berthing of landing craft or when beaching, see Section 22.

3. Tanks for replenishment at sea operations

For tanks to be used for replenishment at sea (RAS) operations, the surge pressures of the transferred liquid have to be considered.

Note

To increase safety during RAS operations, it is recommended to electronically monitor the supply procedure and the tank pressure because, normally, the structural strength of the tank is the weakest element in the safety chain.

H. Loads due to military equipment

1. Loads on the hull structure introduced by weapons and sensors

These loads and the relevant acceptance criteria, such as permissible deflections, vibration levels, etc., are to be defined by the Naval Authority or the Shipyard and have to be specified in a load plan.

2. Loads due to explosions

The loads due to internal and external explosions above and below the water surface as well as the relevant acceptance criteria are to be provided by the Naval Authority and have to be specified in a load plan. Reference is also made to Section 16.

3. Loads due to aircraft operations

3.1 Fixed wing aircraft

3.1.1 For the operation of fixed wing aircraft, the following areas on the deck have to be distinguished and clearly marked for their application:

- landing area:
  an area on the weather deck or a specially designed platform. It may be equipped with arresting gear for landing aircraft, creating special point loads on starboard and port side of the landing strip.

- take-off area:
  the forces introduced by starting catapults as well as the structure of a ramp to assist take off are to be specially considered. Thermal loads caused by jet blast must be observed.

- parking areas:
  on the sides of the landing / take-off deck or in a special hangar deck

3.1.2 In parking areas of the aircraft, the load is to be calculated for the following conditions:

- maximum take-off weight of the aircraft

- Acceleration factors a_x, a_y, a_z according to B.

- Arrangement of lash-down system, including prestresses, if applicable

3.1.3 To determine the imposed loads on the different deck areas in more detail, the following information is needed from the Naval Authority:

- Number and kinds of aircraft to be operated

- Weight, weight distribution and wheel configuration

- Landing speeds and dynamic factors, landing equipment foreseen

- Starting equipment and procedure

3.2 Helicopters and drones

For the design of landing, parking and hangar decks suitable for helicopter/drone operation, the structure has to be investigated under the most unfavourable parking position of any kind and type of helicopter. For the parking positions, the actual lashing system of the helicopters is to be considered.

For scantling purposes, other loads (cargo, snow/ice, etc.) are to be considered simultaneously or separately, depending on the conditions of operation to be expected.

If detailed information on helicopters is not available, loads given in 3.2.1 to 3.2.3 may be used as a basis.

3.2.1 Wheel or skid load

3.2.1.1 At any parking position:

The total wheel or skid load consists of static and dynamic components.

$P_E = P_{Estat} \cdot \gamma_{fstat} + P_{Edyn} \cdot \gamma_{fdyn}$ [kN]

P_{Estat} = wheel or skid load according to the construction of the heaviest kind of helicopter to be used on board, see Fig. 5.5. This load is evenly distributed over the contact area

f = 300 · 300 mm for a single wheel, or it is specified according to data supplied by helicopter manufacturers. For dual wheels or skids, this load is to be determined individually in accordance with given dimensions.

= 0,5 G [kN]

P_{Edyn} = $P_{Estat}\, a_z$ [kN]

G = maximum take-off weight [kN] of the helicopter, including deadweight, crew, fuel, cargo, weapons, etc.

a_z = vertical acceleration factor according to B.1.

e = wheel or skid distance according to the kinds of helicopters to be operated, see Fig. 5.5

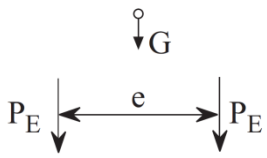

Fig. 5.5 Distribution of static wheel loads

3.2.1.2 Total load for normal landing:

The landing impact for one wheel or skid according to Fig. 5.5 at any landing position is:

$P_E = 2{,}0\ P_{Estat}$ [kN]

3.2.1.3 Emergency and crash landing:

If in addition emergency and crash landing situations have to be considered, the loads and partial safety factors for local static and dynamic loads have to be agreed with Naval Administration and **TL**.

3.2.2 Uniform loads on flight or hangardeck

The following uniformly distributed are minimum values. These loads may be higher, depending on the definitions in the load plan.

The total design load consists of static and dynamic components.

p_L = $\gamma_{fstat}\ p_{Lstat} + \gamma_{fdyn}\ p_{Ldyn}$ [kN/m^2]

p_{Lstat} = 2,0 kN/m^2 for flight deck

= 3,0 kN/m^2 for hangar deck

p_{Ldyn} = $p_{Lstat}\ .\ a_z$ [kN/m^2]

3.2.3 Tie down forces

The tie down system or the helicopter handling system cause additional tie down forces to act on the helicopter deck. The following forces have to be considered:

– horizontal acceleration forces of the helicopter at take-off weight G based on the acceleration components ax and ay, see B.

– prestress forces if a tie down system is used

– components from wind forces on the helicopter, if lashed on deck (outside the hangar), for a wind speed v_W = 50 m/s, see E.2.

Note

If no other information is available, the following loads may be assumed for lashing of helicopters in hangars:

– *fastening pots in the deck: 35 kN*
– *lashing to walls: 15 kN*

4. Loads caused by replenishment at sea (RAS)

4.1 Replenishment at sea using transverse board to board procedures

4.1.1 A system for replenishment at sea between two naval ships, in general, serves the following logistic purposes:

- Exchange of personnel (normally one person at a time)

- Transport of provisions (often on pallets weighing between 1 and 2 tons maximum)

- Pumping of liquids, mostly fuel, lubrication oils and freshwater, see Chapter 107 - Ship Operation Installations and Auxiliary Systems, Section 4

Weights of loads and volumes of liquids to be transferred, sea states while replenishing, as well as maximum distances between the ships have to be defined by the Naval Authority.

4.1.2 The special twin-cable rope arrangement between the two ships causes two main reaction forces to act on both ships:

- The force of the support line that carries the loads. This force is governed by the weight of the load being transferred. (The weight is a force acting vertically downward.)

- The force of the hauling rope that pulls the pallet carrying the goods being transferred or the force of fasteners for the hose connection between the ships. (This force acts mainly in the horizontal direction.)

Generally, the cable arrangement will have a force diversion point at the masts, or special rigging is provided to distribute cable loads. When the replenishment system is not used, the appropriate cables will be stored on rope drums onboard, see Chapter 107 - Ship Operation Installations and Auxiliary Systems, Section 4.

4.1.3 For calculation of rigging reaction forces at cable tie-downs and foundations, ship motions and the corresponding transverse acceleration (see B.) as well as a ship heeling angle of ± 5° have to be taken into account.

4.2 Replenishment at sea using stern / bow procedures

4.2.1 This kind of replenishment method, suitable only for the transfer of liquids, consists of floating hoses equipped with quick-closing couplings sup-ported by a bridle. An accompanying safety rope connection, extending from the stern of the supplying ship, must be provided. Equipment may be taken onboard the receiving ship from a ship's side near the bow or the stern, see Chapter 107 - Ship Operation Installations and Auxiliary Systems, Section 4.

4.2.2 In general, the floating hoses between the two ships form a loop, thereby avoiding the formation of direct reaction forces and compensating for temporary speed differences between the two ships. Details on volumes to be transferred, lengths of hose connections, and maximum speed of the two ships during replenishment operations have to be provided by the Naval Authority and serve as a basis for calculating hose resistance forces that affect ship operations.

Note:

Approximate values of loads from hoses depend on the nominal diameter of the hoses and are defined in Chapter 107 - Ship Operation Installations and Auxiliary Systems, Section 4, D.3.

5. Loads from beach landing operations

For naval landing ships, additional loads caused by contact of the ship's bottom with the landing beach must be expected to occur over about 30 - 50 percent of the forward bottom area. Therefore, additional load cases have to be considered for the global longitudinal strength analysis as well as for the local strength analysis. The operational requirements have to be defined by the Naval Authority.

I. Deadweight of Structures

1. The deadweight of the structures has to be considered as a load.

Note:

If the deadweight of the structure is small enough, it can be neglected, e.g., for shell structures and walls.

2. Static load

The static load is:

dwl = deadweight of an element area [kN/m^2]

3. Dynamic load

The dynamic load is:

$dwl = dwl \cdot a_{comp}$ [kN/m^2]

a_{comp} = acceleration components a_x, a_y or a_z of the acceleration according to B. 1.

4. Total load

The total load is:

$p_{dw} = dw1 \cdot \gamma_{fstat} + dw1_{dyn} \cdot \gamma_{fdyn}$ [kN/m^2]

SECTION 6

LONGITUDINAL STRENGTH

A. General

1. Scope

1.1 In general the hull girder loads are to be determined by direct calculation. For ships of usual form the wave induced bending moments and shear forces according to C. are accepted.

1.2 For wave induced design loads, based on a probability level of $Q = 10^{-8}$, the following conditions are to be considered:

- Intact condition
- Damaged condition, if applicable, according to Section 2, C.
- Residual strength condition, if applicable, according to Section 21.

1.3 For ships of unusual form and design and for ships with extreme bow flare, TL may require determination of vertical wave-induced bending moments and shear forces as well as their distribution over the ship's length. Accepted calculation procedures are to be applied.

Note:
Upon request, such calculations will be performed by TL.

2. Sign convention

The sign convention shown in Fig. 6.1 is to be observed for the longitudinal distribution of weight and buoyancy and for the resulting global loads in calm water and in waves. Positive directions of forces and moments are defined as follows:

- Weight: positive
- Buoyancy: negative
- Vertical shear forces Qz: positive in direction of positive z-axis at the front section, positive in direction of the negative z-axis at the rear section
- Horizontal shear forces Qy: positive in direction of positive y-axis at the front section, positive in direction of the negative y-axis at the rear section
- Normal forces F_x: positive in direction of the positive x-axis at the front section, positive in direction of the negative x-axis at the rear section
- Vertical moments M_y: positive if tension in deck is created
- Horizontal moments M_z: positive if tension on starboard is created
- Torsional moments M_x: positive in clockwise direction around the positive x-axis at the front section, positive in counter clockwise direction at the rear section

3. Definitions

M_{SW} = still water bending moment [kNm] of actual loading condition considered according to C.1.

M_{SWf} = still water bending moment [kNm] in flooded condition according to C. 1.

M_{T1} = total bending moment [kNm] in a seaway for the intact condition according to C. 3.1.1

M_{T2} = total bending moment [kNm] in a seaway for the damaged condition according to C.3.1.2

M_{T3} = total bending moment [kNm] in a seaway for the residual strength condition according to C.3.1.3

M_{WH} = horizontal wave bending moment [kNm] according to C.4.3

M_{WT} = torsional wave bending moment [kNm] according to C.4.4

M_{WV} = vertical wave bending moment [kNm] according to C.2.1 or C.2.3

M_{WVf} = vertical wave bending moment in damaged condition [kNm]

= M_{WV} for $c_V = 1$

Q_{SW} = vertical still water shear force [kN] according to C.1.

Q_{SWf} = vertical still water shear force in damaged condition [kN] according to C.1.

Q_{T1} = total vertical shear force in a seaway [kN] for the intact condition according to C.3.2.1

Q_{T2} = total vertical shear force in a seaway [kN] for the damaged condition according to C.3.2.2

Q_{T3} = total vertical shear force in a seaway [kN] for the residual strength condition according to C.3.2.3

Q_{WH} = horizontal wave shear force [kN] according to C.4.2

Q_{WV} = vertical wave shear force [kN] according to C.2.2 and C.2.3

Q_{WVf} = vertical wave shear force [kN] in flooded condition

= Q_{WV} for $c_V = 1$

c_0 = wave coefficient according to Section 5, A.3.

c_V = velocity coefficient according to Section 5, A.3.

γ_m, γ_{fstat}, γ_{fdyn} see Section 4, Table 4.1

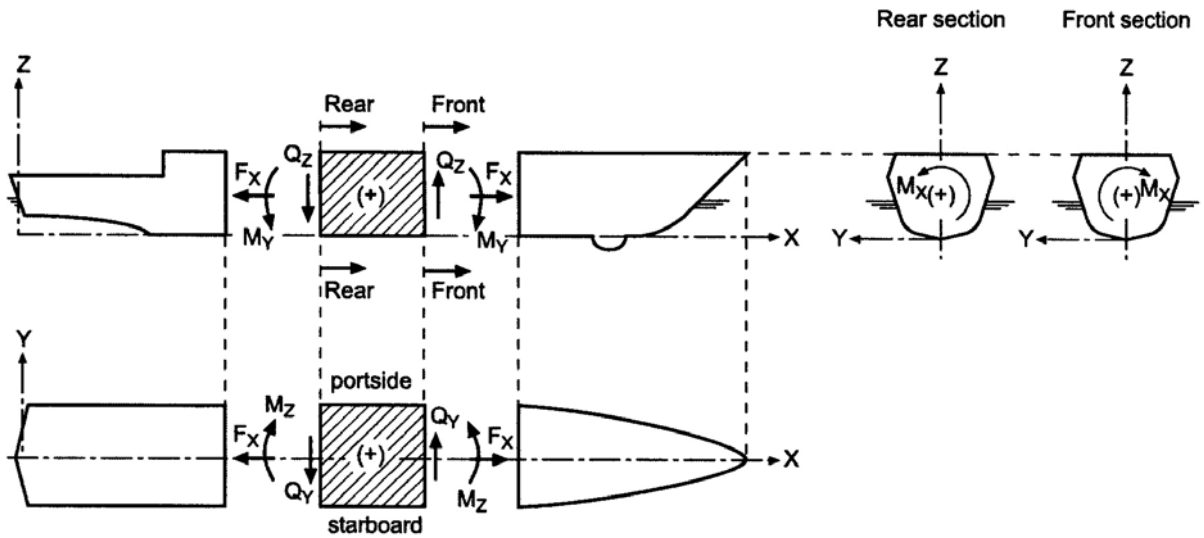

Fig. 6.1 Sign convention

B. Definition of Load Cases

1. For all load cases selected in Section 2 the longitudinal strength of the hull girder has to be proven.

2. Intact condition

2.1 Section 2, B.2 defines a series of load cases for stability considerations of the undamaged ship. The most critical of these cases form the basis for the longitudinal strength calculations.

2.2 The final choice of load cases and weight distributions to be considered for calculations - especially for unusual kinds of naval ships - is to be agreed on between Naval Authority, shipyard and TL.

3. Damaged condition

If the symbol is assigned according to Section 2, C., longitudinal strength of the damaged ship and of the flooded ship is to be investigated. For these cases it is to be understood that the hull girder strength of the damaged ship is not significantly reduced.

4. Condition concerning residual strength

For ships assigned with Class Notation **RSM** according to Section 21, loads are to be considered according to 3.

C. Hull Girder Loads

1. Still water bending moments and shear forces

1.1 For the envisaged load conditions, values of vertical still water bending moment (M_{SW}) and vertical still water shear force (QSW) are to be calculated over the ship's length for a series of relevant load cases, see B.

1.2 If required by the Naval Authority, values of vertical still water bending moment (M_{SWf}) and vertical still water shear force (Q_{SWf}) are to be calculated over the ship's length for the relevant flooded conditions of the ship. Hogging as well as sagging conditions have to be considered.

1.3 From calculations according to 1.1 and 1.2, envelope curves of loads have to be developed for the undamaged ship and, if applicable, for the flooded ship and/or the ship with reduced residual strength. These envelope curves form the basis for further calculations.

2. Wave induced loads

2.1 Direct calculation of wave-induced hull girder design loads

2.1.1 As a basis for direct calculation of design values, weight distributions according to load cases defined in B. 1. are to be used.

In principle, the estimated representative mass distributions for the defined load cases will be the average of the mass distributions that result in the highest and the lowest still water vertical bending moment. This representative mass distribution leads to an average displacement and an average vertical still water bending moment, M_{SW}.

If required by the Naval Authority, similar direct calculations of weight distributions for the damaged and flooded conditions are to be performed according to B.3. The corresponding representative mass distribution yields an average displacement and an average still water bending moment for the flooded ship, M_{SWf}.

2.1.2 Analyses of the ship in harmonic waves are to be executed by direct computational methods that evaluate response operators of wave-induced vertical bending moments and vertical shear forces. Using an adequate nonlinear correction procedure that accounts for a realistic wave breaking criterion, the wave contour along the ship's side has to be determined for relevant harmonic waves with selected wave heights and phase positions. Hydrodynamic pressures are to be extrapolated up to the wave contour.

2.1.3 Hydrodynamic calculations are to be performed for ship speeds that correspond to the operational profile of the ship. If such a profile is not available, a ship speed of half of the expected maximum, continuous ahead speed in calm water, v_0, is to be assumed.

2.1.4 After completing the nonlinear correction, forces acting on the ship, including inertial forces, generally are not in balance. Equilibrium can be achieved by resolving the motion equations, resulting in nonlinearly corrected response values, e. g., bending moments. Repeating this procedure for different wave periods and wave headings yields nonlinearly corrected (pseudo) response amplitude operators that depend on wave height. Depending on the considered phase location, different transfer functions result for the sagging and hogging conditions.

2.1.5 Bending moments and shear forces are to be evaluated according to stochastic methods for linear systems. For the stationary seaways, a $\cos^2$ distribution of wave energy in the main wave encounter direction is to be assumed. The seaways' main wave headings relative to the ship are to be considered as equally distributed. Wave heights (H) used to obtain the wave amplitude dependent (pseudo) transfer functions are to be taken as equal to the significant wave height (H_S) of the corresponding natural seaway (i. e., $H = H_S$).

2.1.6 Calculated long-term values of bending moments and shear forces are to be based on relevant long term wave statistics as defined by, e.g., the Naval Authority. If no data are specified, the wave scatter diagram of the North Atlantic, presented in Table 6.3, is to be applied. This table lists probabilities of occurrence of sea states identified by the significant wave height H_S [m] and the zero up-crossing period T [s].

The number of load cycles for long-term values are to be estimated according to the operational profile of the ship. If no information is available, $5 \cdot 10^7$ load cycles are to be assumed.

2.1.7 Total values of vertical bending moments and vertical shear forces result from the superposition of their long-term values with still water loads and additional slamming loads caused by wave impact in the ship's forebody region.

2.1.8 Where deemed necessary, direct calculations described herein are to include loads caused by horizontal bending and torsion of the ship's hull.

Note:
Such calculations will be performed by TL upon request.

2.2 Vertical wave bending moments

The vertical wave bending moment is to be determined according to the following formula:

$$M_{WV} = 0{,}24 \cdot \mathbf{L}^2 \cdot \mathbf{B} \cdot \sqrt{C_B} \cdot c_0 \cdot c_v \cdot c_M \quad [\mathrm{kNm}]$$

c_M = distribution factor, see Table 6.1 and Fig. 6.2

2.3 Vertical wave shear forces

2.3.1 Vertical wave shear forces are to be determined according to the following formula:

$$Q_{WV} = \mathbf{L} \cdot \mathbf{B} \cdot \sqrt{C_B} \cdot c_0 \cdot c_v \cdot c_Q \quad [\mathrm{kN}]$$

c_Q = distribution factor, see Table 6.2 and Fig. 6.3

Table 6.1 Distribution factor c_M

Range	Hogging	Sagging
$0 \le \frac{x}{\mathbf{L}} < 0{,}4$	$2{,}25 \cdot \sqrt{C_B} \cdot \frac{x}{\mathbf{L}}$	$-0{,}02 - 2{,}45 \cdot \frac{x}{\mathbf{L}}$
$0{,}4 \le \frac{x}{\mathbf{L}} < 0{,}6$	$0{,}9 \cdot \sqrt{C_B}$	-1
$0{,}6 \le \frac{x}{\mathbf{L}} \le 1$	$\left[0{,}9 - 2{,}25\left(\frac{x}{\mathbf{L}} - 0{,}6\right)\right] \cdot \sqrt{C_B}$	$-1 + 2{,}375\left(\frac{x}{\mathbf{L}} - 0{,}6\right)$

Table 6.2 Distribution factor c_Q

Range	Positive shear forces	Negative shear forces
$0 \le \frac{x}{L} < 0{,}10$	$8{,}80 \cdot \sqrt{C_B} \cdot \frac{x}{L}$	$-0{,}1 - 8{,}50 \cdot \frac{x}{L}$
$0{,}10 \le \frac{x}{L} < 0{,}30$	$0{,}88 \cdot \sqrt{C_B}$	- 0,95
$0{,}30 \le \frac{x}{L} < 0{,}45$	$2{,}64 \cdot \sqrt{C_B} - 0{,}9 - \frac{x}{L} \cdot \left(\frac{88}{15} \cdot \sqrt{C_B} - 3\right)$	$-1{,}95 + \frac{10}{3} \cdot \frac{x}{L}$
$0{,}45 \le \frac{x}{L} < 0{,}50$	0,45	- 0,45
$0{,}50 \le \frac{x}{L} < 0{,}65$	$\frac{61}{15} \cdot \frac{x}{L} - \frac{19}{12}$	$-1{,}95 - \frac{x}{L} \cdot \left(6{,}4 \cdot \sqrt{C_B} - 3\right) + 3{,}2 \cdot \sqrt{C_B}$
$0{,}65 \le \frac{x}{L} < 0{,}75$	1,06	$-0{,}96 \cdot \sqrt{C_B}$
$0{,}75 \le \frac{x}{L} < 1{,}00$	$3{,}64 - 3{,}44 \cdot \frac{x}{L}$	$-3{,}84 \cdot \sqrt{C_B} \cdot \left(1 - \frac{x}{L}\right)$

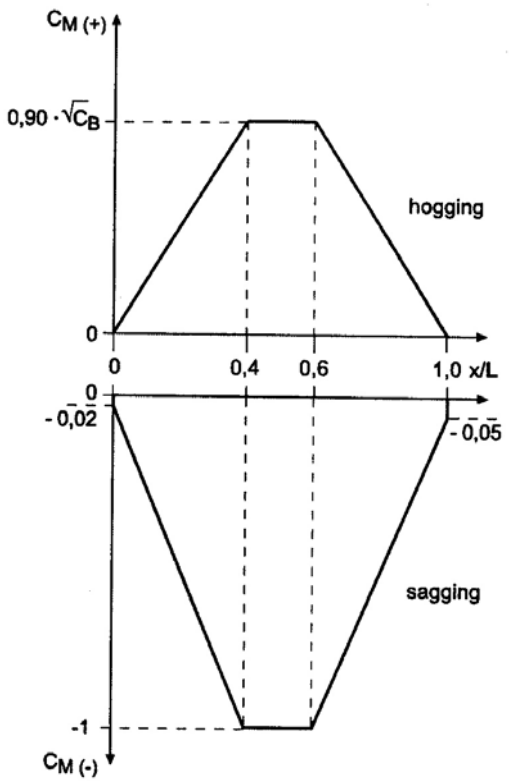

Fig. 6.2 Distribution factor c_M over the ship's length

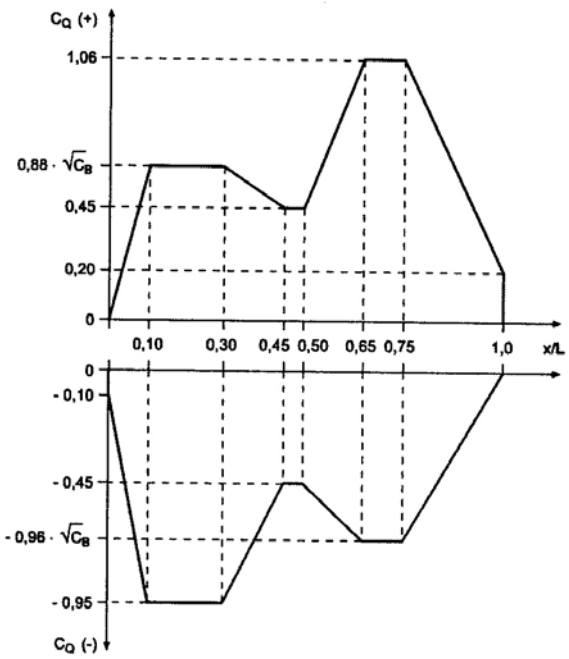

Fig. 6.3 Distribution factor c_Q over the ship's length

2.3.2 For direct calculation of wave shear forces the procedure described in 2.3 is to be followed.

3. Longitudinal distribution of design bending moments and design shear forces in waves

3.1 Total bending moments

3.1.1 Intact condition

M_{T1} of the ship in the hogging and sagging condition For the intact condition, at longitudinal position x over the ship's length, the total bending moment is to be determined according to the following formula:

$$M_{T1} = M_{SW} \cdot \gamma_{fstat} + M_{WV} \cdot \gamma_{fdyn} \quad [kNm]$$

3.1.2 Damaged condition

For the damaged condition, at longitudinal position x over the ship's length, the total bending moment M_{T2} of the ship in the hogging and sagging condition is to be determined according to the following formula:

$$M_{T2} = M_{SWf} \cdot \gamma_{fstat} + M_{WVf} \cdot \gamma_{fdyn} \quad [kNm]$$

3.1.3 Residual strength

For residual strength considerations, at longitudinal position x over the ship's length, the total bending moment M_{T3} is to be determined according to the following formula:

$$M_{T3} = \gamma_{fstat} \cdot M_{SWf} + \gamma_{fdyn} \cdot M_{WVf} \quad [kNm]$$

3.2 Total shear forces

3.2.1 Intact condition

For the intact condition, at longitudinal position x over the ship's length, the vertical shear force in the seaway is to be determined according to the following formula:

$$Q_{T1} = Q_{SW} \cdot \gamma_{fstat} + Q_{WV} \cdot \gamma_{fdyn} \quad [kN]$$

3.2.2 Damaged condition

For the damaged condition, at longitudinal position x over the ship's length, the vertical shear force in the seaway is to be determined according to the following formula:

$$Q_{T2} = Q_{SWf} \cdot \gamma_{fstat} + Q_{WVf} \cdot \gamma_{fdyn} \quad [kN]$$

3.2.3 Residual strength

For residual strength considerations, at longitudinal position x over the ship's length, the vertical shear force Q_{T3} in the seaway is to be determined according to the following formula:

$$Q_{T3} = \gamma_{fstat} \cdot Q_{SWf} + \gamma_{fdyn} \cdot Q_{WVf} \quad [kN]$$

Table 6.3 Wave scatter diagram

	Zero upcrossing period T [s]							
Hs[m]	**3,5**	**4,5**	**5,5**	**6,5**	**7,5**	**8,5**	9,5	**10,5**
0,5 1,5	l,300E-5 0,000E+0	l,337E-3 2,930E-4	8,656E-3 9,860E-3	l,186E-2 4,976E-2	6,342E-3 7,738E-2	l,863E-3 5,570E-2	3,690E-4 2,376E-2	5,600E-5 7,035E-3
2,5 3,5	0,000E+0 0,000E+0	2,200E-5 2,000E-6	l,975E-3 3,490E-4	2,159E-2 6,955E-3	6,230E-2 3,227E-2	7,450E-2 5,675E-2	4,860E-2 5,099E-2	2,066E-2 2,838E-2
4,5 **5,5**	0,000E+0 0,000E+0	0,000E+0 0,000E+0	6,000E-5 l,000E-5	l,961E-3 5,100E-4	l,354E-2 4,984E-3	3,288E-2 l,603E-2	3,857E-2 2,373E-2	2,686E-2 2,008E-2
6,5 **7,5**	0,000E+0 0,000E+0	0,000E+0 0,000E+0	2,000E-6 0,000E+0	l,260E-4 3,000E-5	l,670E-3 5,210E-4	6,903E-3 2,701E-3	l,258E-2 5,944E-3	l,269E-2 7,032E-3
8,5 9,5	0,000E+0 0,000E+0	0,000E+0 0,000E+0	0,000E+0 0,000E+0	7,000E-6 2,000E-6	l,540E-4 4,300E-5	9,790E-4 3,320E-4	2,559E-3 l,019E-3	3,506E-3 l,599E-3
10,5 **11,5**	0,000E+0 0,000E+0	0,000E+0 0,000E+0	0,000E+0 0,000E+0	0,000E+0 0,000E+0	l,200E-5 3,000E-6	l,070E-4 3,300E-5	3,790E-4 l,330E-4	6,750E-4 2,660E-4
12,5 **13,5**	0,000E+0 0,000E+0	0,000E+0 0,000E+0	0,000E+0 0,000E+0	0,000E+0 0,000E+0	l,000E-6 0,000E+0	l,000E-5 3,000E-6	4,400E-5 l,400E-5	9,900E-5 3,500E-5
14,5 **15,5**	0,000E+0 0,000E+0	0,000E+0 0,000E+0	0,000E+0 0,000E+0	0,000E+0 0,000E+0	0,000E+0 0,000E+0	l,000E-6 0,000E+0	4,000E-6 l,000E-6	l,200E-5 4,000E-6
16,5	0,000E+0	0,000E+0	0,000E+0	0,000E+0	0,000E+0	0,000E+0	0,000E+0	l,000E-6

	Zero upcrossing period T [s]							
Hs[m]	**11,5**	**12,5**	**13,5**	**14,5**	**15,5**	**16,5**	**17,5**	**18,5**
0,5 1,5	7,000E-6 l,607E-3	l,000E-6 3,050E-4	0,000E+0 5,100E-5	0,000E+0 8,000E-6	0,000E+0 l,000E-6	0,000E+0 0,000E+0	0,000E+0 0,000E+0	0,000E+0 0,000E+0
2,5 3,5	6,445E-3 l,114E-2	l,602E-3 3,377E-3	3,370E-4 8,430E-4	6,300E-5 l,820E-4	l,100E-5 3,500E-5	2,000E-6 6,000E-6	0,000E+0 l,000E-6	0,000E+0 0,000E+0
4,5 **5,5**	l,275E-2 l,126E-2	4,551E-3 4,636E-3	l,309E-3 l,509E-3	3,190E-4 4,100E-4	6,900E-5 9,700E-5	l,300E-5 2,100E-5	2,000E-6 4,000E-6	0,000E+0 l,000E-6
6,5 **7,5**	8,259E-3 5,249E-3	3,868E-3 2,767E-3	l,408E-3 l,117E-3	4,220E-4 3,670E-4	l,090E-4 l,020E-4	2,500E-5 2,500E-5	5,000E-6 6,000E-6	l,000E-6 l,000E-6
8,5 9,5	2,969E-3 l,522E-3	l,746E-3 9,920E-4	7,760E-4 4,830E-4	2,770E-4 l,870E-4	8,400E-5 6,100E-5	2,200E5 l,700E-5	5,000E-6 4,000E-6	l,000E-6 l,000E-6
10,5 **11,5**	7,170E-4 3,140E-4	5,150E-4 2,470E-4	2,730E-4 l,420E-4	l,140E-4 6,400E-5	4,000E-5 2,400E-5	l,200E-5 7,000E-6	3,000E-6 2,000E-6	l,000E-6 l,000E-6
12,5 **13,5**	l,280E-4 5,000E-5	l,100E-4 4,600E-5	6,800E-5 3,100E-5	3,300E-5 l,600E-5	l,300E-5 7,000E-6	4,000E-6 2,000E-6	l,000E-6 l,000E-6	0,000E+0 0,000E+0
14,5 **15,5**	l,800E-5 6,000E-6	l,800E-5 7,000E-6	l,300E-5 5,000E-6	7,000E-6 3,000E-6	3,000E-6 l,000E-6	l,000E-6 l,000E-6	0,000E+0 0,000E+0	0,000E+0 0,000E+0
16,5	2,000E-6	2,000E-6	2,000E-6	l,000E-6	l,000E-6	0,000E+0	0,000E+0	0,000E+0

4. Horizontal wave bending and torsion

4.1 General

In addition to the requirements under 2., for ships with large deck openings, the combined stresses caused by vertical and horizontal bending are to be considered.

4.2 Horizontal shear forces

The horizontal wave shear force CW is determined by the following formulae:

$$Q_{WH} = \sqrt{\mathbf{L} \cdot \mathbf{T}} \cdot \mathbf{B} \cdot c_0 \cdot \gamma_{fdyn} \quad [kN]$$

γ_{fdyn} = partial safety factor of dynamic load components according to Section 4, A.2.2

= partial safety factor of dynamic load components according to load case LCA for the intact condition

= partial safety factor of dynamic load components according to load case LCB for the damaged condition

= 1,0 for residual strength considerations

4.3 Horizontal wave bending moments

The horizontal wave bending moment M_{WH} is to be determined according to the following formula:

$$M_{WH} = 0{,}32 \cdot \mathbf{L} \cdot Q_{WH} \cdot c_M \quad [kNm]$$

c_M = distribution factor, see 2.1

4. Torsion

Effects of the hull girder torsional moment M_{WT} are to be considered if deemed necessary.

D. Structural Resistance

1. Determination of the moments of inertia

When calculating moments of inertia of different sections over the ship's length, the sectional area of all continuous longitudinal members contributing to the longitudinal strength is to be taken into account. Shadow areas of the structural configuration influence the effectiveness of longitudinal members. As a consequence, stress transmission forward and aft of openings, at abrupt changes of the structure in height or breadth, at the end of a superstructure, etc. takes place only in a zone bounded by an angle of 30° for horizontal elements and by an angle of 45° for vertical elements. Application of this principle for the hull and parts of the superstructure is demonstrated in Figs. 6.4 and 6.5.

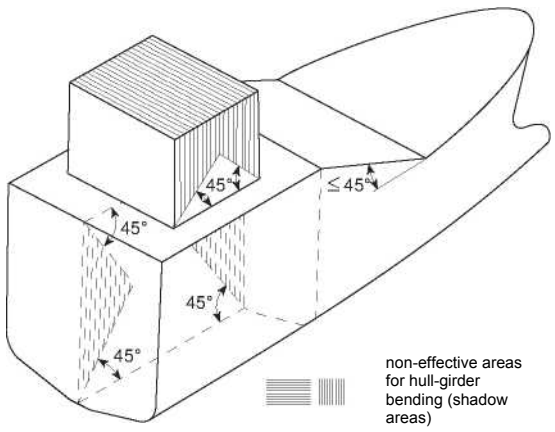

Fig. 6.4 Application of the shadow principle for the ship's hull and superstructures

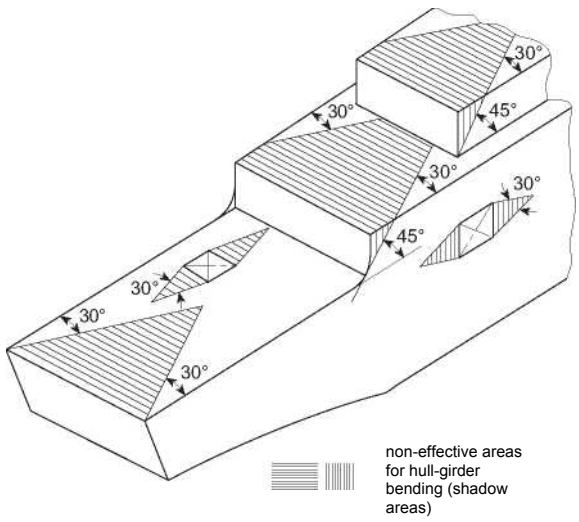

Fig. 6.5 Application of the shadow principle for the ship's hull and superstructures

2. In each transverse section of the ship, relevant parts of the shadow areas are to be deducted from

sectional areas used to calculate moments of inertia. Smaller openings (manholes, lightening holes, single scallops in way of seams, etc.) need not be deducted, provided the sum of their breadths or shadow area breadths in one transverse section does not reduce the section modulus at deck or bottom by more than 3 % and provided that the height of lightening holes, drainage openings and single scallops in longitudinals or longitudinal girders does not exceed 25 % of the web depth or, for scallops, 75 mm

Refer also to Section 4,I.1.2.

E. Acceptance Criteria

1. Vertical bending

The following criteria are to be met:

$$\frac{M_{py1}}{\gamma_m} \geq M_{T1}$$

$$\frac{M_{py2}}{\gamma_m} \geq M_{T2}$$

Mpy_1 = transferable vertical bending moment [kNm] around the horizontal axis of ship's plastified undamaged cross section, see Section 4, E.2.

M_{py2} = transferable vertical bending moment [kNm] around the horizontals axis of ship's plastified damaged cross section

If damages are not specified $M_{p2} = M_{p1}$ may be used.

M_{T1},M_{T2} = see C.3.

2. Vertical shear

The following criteria are to be met:

$$\frac{Q_{pz1}}{\gamma_m} \geq Q_{T1}$$

$$\frac{Q_{pz2}}{\gamma_m} \geq Q_{T2}$$

Q_{pz1} = transferable vertical shear force [kN] at ship's undamaged cross section, see Section 4, E.3.

Q_{pz2} = transferable vertical shear force [kN] of ship's damaged cross section

If damages are not specified $Q_{p2} = Q_{p1}$ may be used.

3. Regarding "residual strength" see Section 21.

4. Deflections

4.1 The elastic longitudinal hull girder deflection may have to be limited in order to keep the ship fit for its intended purpose.

4.2 Reference is also made to the vibration analy sis according to Section 16, C.

F. Calculation of Hull Girder Stresses due to Bending and Shear

1. General

The design stresses are to be calculated generally by direct analysis. If direct analysis is not carried out, then the formulae given in E.2. to E.6. for the stress components may be applied. The design stresses are required for the fatigue strength analysis, see Section 17.

2. Design stresses due to still water bending

The design hull girder bending stress σ_{SW} at the hull girder section considered for the intact condition is to be determined by the following formula:

$$\sigma_{SW} = M_{SW} \frac{z_i - z_0}{I_{y1} \cdot 10^3} \left[N/mm^2\right]$$

I_{y1} = moment of inertia around the horizontal axis for the intact hull girder cross section [m^4] according to D.

z_0 = distance of the neutral axis from base line [m]

z_i = distance from baseline of the member under consideration [m]

3. Design stresses due to vertical bending in waves

The design hull girder bending stress σ_{WV} at the hull girder section considered for the intact condition due to vertical bending is to be determined by the following formula:

$$\sigma_{WV} = M_{WV} \frac{z_i - z_0}{I_{y1} \cdot 10^3} \left[N/mm^2\right]$$

I_{y1} = moment of inertia about the horizontal axis for the intact hull girder section [m^4] according to D.

z_0 = distance of the neutral axis from the baseline [m]

z_i = distance from baseline of the member under consideration [m]

4. Shear stress calculation in general

The shear stress distribution may be determined by means of calculation procedures accepted by TL.

5. Shear stress calculation due to vertical shear forces

For ships without longitudinal bulkheads or with 2 longitudinal bulkheads, the distribution of the shear stress in the shell and in the longitudinal bulkheads can be calculated with the following formula:

Statical from Q_{SW}:

$$\tau_{SW} = \frac{Q_{SW} \cdot S_y(z)}{I_{y1} \cdot t} \cdot (0.5 - \alpha) \quad \left[N/mm^2\right]$$

Dynamical from Q_{WV}:

$$\tau_{WV} = \frac{Q_{WV} \cdot S_y(z)}{I_{y1} \cdot t} \cdot (0.5 - \alpha) \quad \left[N/mm^2\right]$$

$S_y(z)$ = First moment of the sectional area considered [m^3], above or below, respectively, the level z considered, and related to the horizontal neutral axis.

I_{y1} = moment of inertia of the midship section around the horizontal axis [m^4]

t = Thickness of side shell plating respectively of the longitudinal bulkhead considered [mm]

α = 0 for ships without longitudinal bulkheads

If two longitudinal bulkheads are arranged:

α = $0.16 + 0.08 \cdot A_S/A_L$ for the longitudinal bulkheads

α = $0.34 - 0.08 \cdot A_S/A_L$ for the side shell

A_S = Area of cross section of the shell within depth **H** [m^2]

A_L = Area of cross section of longitudinal bulkhead within the depth **H** [m^2].

For ships of normal shape and construction, the ratio S_y/I_y determined for the midship section can be used for all cross sections.

6. Stresses from horizontal wave bending and torsion

6.1 Stresses due to horizontal wave bending

The stresses due to horizontal wave bending for the intact condition may be determined by the following formula:

$$\sigma_{WH} = M_{WH} \frac{y_i - y_0}{I_{z1} \cdot 10^3} \left[N/mm^2\right]$$

I_{z1} = moment of inertia around the vertical neutral axis [m^4] for the intact condition at the section considered

y_0 = distance of the neutral axis from centre line [m]

= 0 for symmetrical sections

y_i = distance of the member under consideration from centre line [m]

6.2 Stresses due to torsion

In general stresses due to torsion can be neglected for ships with closed weather decks or weather decks with small openings. For ships with large deck openings and/or unusual structural design stresses due to torsion are to be considered in a global stress analysis.

SECTION 7

BOTTOM AND SHELL STRUCTURES

A. General, Definitions

1. General

This Section applies to plating and primary and secondary stiffening of the complete shell and bottom structures. It is recommended to determine the scantlings of primary members by a direct strength analysis with a model of at least one compartment length according to Section 4, D.

1.1 Arrangement of double bottom

1.1.1 It is recommended that a double bottom is to be fitted extending from the collision bulkhead to the afterpeak bulkhead, as far as this is practicable and compatible with the design and service of the ship.

1.1.2 In single hull ships the inner bottom is to be extended to the ship's sides as to protect the bottom up to the turn of the bilge.

1.1.3 In fore- and afterpeak a double bottom need not be arranged.

1.1.4 For Tank Landing Ship (LST) and Infantry Landing Craft (LCI) special attention has to be paid to the bottom structure at the rear end (centre of rotation) of the landing ramp because the total weight of tracked vehicles acts there as local load, see also Section 22 and Chapter 107 - Ship Operation Installations and Auxiliary Systems, Section 3, F.

2. Definitions

c_0 = wave coefficient according to Section 5, A.3.

p_{BK} = design load acting on bilge keels [kN/m^2] according to Section 5, C.3.1

p_e = design impact pressure [kN/m^2] forward of $\frac{x}{L}$ = 0,6 according to Section 5, C.2.

p_L = load on decks [kN/m^2], according to Section 5,F.

p_S = total design pressure for the bottom and shell [kN/m^2], according to Section 5, C.1.

p_{T1} = design pressure for tanks [kN/m^2] according to Section 5, G.1.3

p_{WT} = total design load on watertight partitions [kN/m^2] according to Section 5, D.1.

T_{min} = smallest draught [m]

3. Design references

3.1 Table 7.1 summarizes the requirements for the design of bottom and shell structures.

3.2 Buckling strength

All elements of the bottom and shell structure are to be examined for sufficient buckling strength according to Section 4, H.

3.3 Minimum thickness

At no point the thickness of bottom and side shell plating shall be less than the values defined in Section 4, Table 4.2.

B. Plating

1. Keel, keel plating

1.1 Design of keel

For the design of a keel the following operating conditions have to be observed:

- Docking, see also F.2.
- Beach contact, e.g. for landing ships, see also F.3.

1.2 Flat keel

1.2.1 A keel plate shall extend over the complete length of the ship. The width of flat plate keel is not to be less than:

$$b=800+5L \text{ [mm]}$$

1.2.2 The thickness of the flat plate keel is not to be less than:

$$t_{FK} = t_B + 1,5 \text{ [mm]}$$

t_B = thickness of bottom plating [mm] according to 2.

1.3 Box keel

1.3.1 The bottom plate of the box keel shall have a plate thickness not less than the flat keel thickness t_B + 1,5 mm.

The side plates shall have a thickness not less than t_B + 1,0 mm.

Table 7.1 Bottom and side shell design references

Structural elements	Design according to	Loads according to Section 5, if applicable	Remarks
Bottom and side shell:			
Plating	Section 4, B.3.	$p_s \rightarrow$ C.1.	See B.
Stiffeners transverse	Section 4, Table 4.3	$p_e \rightarrow$ C.2.	See C.2.
Stiffeners longitudinal		$p_{T1} \rightarrow$ G.	See C.3.
Inner bottom:			
Plating	Section 4, B.3.	$p_{WT} \rightarrow$D.1.	See B.
Stiffeners transverse	Section 4, Table 4.3	$p_{T1} \rightarrow$ G.	See C.2.
Stiffeners longitudinal		$p_L \rightarrow$ F.	See C.3.
Margin plates	Section 4, B.3.		See D.3.
Primary members:			
Floors	Section 4, D.	$p_s \rightarrow$ C.1.	See D.4.
Longitudinal girders and stringers		$p_e \rightarrow$ C.2.	See D.1, D.2.
Transverses, web frames		$p_{T1} \rightarrow$ G. $p_L \rightarrow$ F.	See D.5.

1.3.2 Sufficient shifting brackets (horizontal and/ or vertical) are to be provided at the cross point of the bottom plating and side plating of the boxkeel in way of floors.

1.4 Bar keel

1.4.1 The sectional area A of the bar keel shall not be less than the following:

$$A = 0,5 \cdot \mathbf{L} \quad [cm^2]$$

1.4.2 Where a bar keel is arranged, the adjacent garboard strake is to have the scantlings of a flat plate keel.

2. Bottom and side plating

The design shall follow the references given in Table 7.1.

3. Sheerstrake

3.1 The width of the sheerstrake is not to be less than:

$$b = 800 + 5\,\mathbf{L}\ [mm]$$

$$b_{max} = 1800\ mm$$

3.2 The thickness of the sheerstrake shall, in general, not be less than the greater of the following two values:

$$t = 0{,}5\,(t_D + t_s)\ [mm]$$

$t = t_s$

t_D = required thickness of strength deck

t_S = required thickness of side shell

3.3 Where the connection of the deck stringer with the sheerstrake is rounded, the radius is to be at least 15 times the plate thickness or 150 mm whichever is greater.

3.4 Welds on upper edge of sheerstrake are subject to special approval.
Regarding welding between sheerstrake and deck stringer, see Section 8, B.1.4.

3.5 Holes for scuppers and other openings are to be smoothly rounded. Notch factors, see Section 4, J.

4. Inner bottom plating

The design shall follow the references given in Table 7.1.

C. Secondary Stiffeners

1. General

1.1 Design

References for scantling determination of transverse and longitudinal framing are given in Table 7.1.

1.2 Frames in tanks

The additional requirements of Section 10 have to be fulfilled.

1.3 Point loads

Point loads acting on secondary stiffeners are to be considered when determining scantlings.

2. Transverse framing

2.1 End attachment

2.1.1 The lower bracket attachment to the bottom structure is to be determined on the basis of the frame section modulus.

2.1.2 The upper bracket attachment to the deck structure and/or to the 'tween deck frames is to be determined on the basis of the section modulus of the deck beams or 'tween deck frames whichever is the greater.

2.1.3 Where the bottom is framed longitudinally but the sides are framed transversely, flanged brackets having a thickness of the floors are to be fitted between the plate floors at every transverse frame, extending to the outer longitudinals at the bottom and inner bottom.

2.1.4 Where frames are supported by a longitudinally framed deck, the frames fitted between web frames are to be connected to the adjacent longitudinals by brackets. The scantlings of the brackets are to be determined on the basis of the section modulus of the frames.

2.2 Strengthening in fore and aft body

2.2.1 General

Fore and aft body is to be properly designed considering the hydrodynamic pressure defined in Section 5, C.

2.2.2 Tripping brackets

Between the point of the greatest breadth of the ship at maximum draft and the collision bulkhead tripping brackets are to be fitted if frames are not supported over a distance exceeding 2,6 m.

3. Longitudinal framing

3.1 Longitudinals shall preferably be continuous through floor plates and/or transverses. Attachments of their webs to the floor plates and transverses are to be sufficient to transfer the support forces according to Section 4, Table 4.3.

Forward of 0,1 **L** from **FP** webs of longitudinals are to be connected effectively at both sides to transverse members. If the flare angle α exceeds 40° additional heel stiffeners or brackets are to be arranged.

3.2 Where longitudinals are not continuous at watertight floors and bulkheads, they are to be attached to the floors by brackets of the thickness of plate floors, and with a length of weld at the longitudinals equal to 2 x depth of the bottom longitudinals.

3.3 Where necessary, for longitudinals between transverse bulkheads and side transverses additional stresses resulting from the deformation of the side transverses are to be taken into account.

3.4 In the fore body, where the flare angle α exceeds 40° and in the aft body where the flare angle exceeds 75° the unsupported span of the longitudinal located between T_{min} - c_0 and T + c_0 must not be larger than 2,6 m. Otherwise tripping brackets are to be arranged.

4. Struts

Struts are elements which connect secondary stiffening members at inner and outer bottom.

The cross sectional area of the struts is to be determined according to Section 4, H.4. analogously. The strut load is to be taken from the direct stress analysis.

D. Primary Members

1. Bottom centre girder

1.1 All ships are to have a centre girder or two longitudinal girders near to each other for docking.

1.2 The centre girder has to be extended as far forward and aft as practicable. It is to be connected to the girders of a non-continuous double bottom or is to be scarphed into the double bottom by two frame spacings.

1.3 Towards the ends the thickness of the web plate as well as the sectional area of the top plate may be reduced by 10 per cent. Lightening holes are to be avoided.

1.4 Lightening holes in the centre girder are generally permitted only outside 0,75 L amidships. Their depth is not to exceed half the depth of the centre girder and their lengths are not to exceed the half frame spacing.

1.5 No centre girder is required in way of engine seating in case of centre engine.

1.6 The center girder should be watertight at least for 0,5 **L** amidships, unless the double bottom is subdivided by watertight side girders.

2. Bottom side girders

2.1 The side girders are to extend as far forward and aft as practicable. They are to be connected to the girders of a non-continuous double bottom or are to be scarphed into the double bottom by two frame spacing.

2.2 Towards the ends, the web thickness and the sectional area of the face plate may be reduced by 10 per cent.

2.3 At least one side girder shall be fitted in the engine room and in way of 0,25 **L** aft of **FP.** The actual number of bottom side girders in all parts of double bottom has to be arranged at distances following from the overall bottom analyses according to Section 4, E.

3. Margin plates

3.1 The margin plate has to be watertight. Brackets in line with floor plates and frames are to be provided to connect the margin plate to the side framing.

3.2 In case of longitudinal framing system stiffening plates are to be provided at the margin plate to connect the margin plate to the longitudinals in the double bottom.

4. Floor plates

4.1 General

4.1.1 For the connection of floor plates with the frames, see Section 15.

4.1.2 Deep floors, particularly in the after peak, are to be provided with buckling stiffeners.

4.1.3 The floor plates are to be provided with limbers to permit the water to reach the pump suctions.

4.1.4 In ships having a considerable rise of floor the depth of the floor plate webs at the beginning of the turn of bilge is not to be less than the depth of the frame.

4.1.5 The face plates of the floor plates are to be continuous over their span. If they are interrupted at the centre keelson, they are to be connected to the centre keelson by means of full penetration welding.

4.1.6 Where the longitudinal framing system changes to the transverse framing system, structural continuity or sufficient scarphing is to be provided for.

4.2 Plate floor arrangement

4.2.1 The spacing of plate floors will result from the overall analysis according to Section 4, E.

4.2.2 Plate floors are to be fitted:

- In the engine room, as far as necessary
- Under boiler seatings
- Under bulkheads
- Under corrugated bulkheads, see also Section 4, C.6.

4.2.3 Where the longitudinal framing system is adopted, the floor spacing should, in general, not exceed 5 times the longitudinal frame spacing.

4.2.4 In way of strengthening of bottom forward, the plate floors are to be connected to the shell plating and inner bottom by continuous fillet welding.

4.3 Bracket floors

4.3.1 Where plate floors are not required according to 4.2.1 and 4.2.2 bracket floors may be fitted.

4.3.2 Bracket floors consist of bottom frames at the shell plating and reversed frames at the inner bottom, attached to centre girder, side girders and ship's side by means of brackets.

4.3.3 The design shall follow the references defined in Table 7.1 for stiffeners.

4.4 Floor plates in the peaks

4.4.1 The thickness of the floor plates in the peaks is to be determined according to the direct analysis described in B.

4.4.2 The floor plates in the afterpeak are to extend over the stern tube, see also Section 11, C.

4.4.3 Where propeller revolutions are exceeding 300 rpm (approx.) the peak floors above the propeller are to be strengthened. Particularly in case of flat bottoms additional longitudinal stiffeners are to be fitted above or forward of the propeller.

5. Web frames and stringers

5.1 Web frames, stringers

References for scantling determination of web frames and stringers as well as cross ties, if fitted, are given in Table 7.1.

5.2 Side transverses

In the fore body where flare angles α are larger than 40° the web is to be stiffened in the transition zone to the deck transverse.

5.3 Web frames in machinery spaces

5.3.1 In the engine and boiler rooms, web frames suitably spaced are to be fitted. Generally, they should extend up to the uppermost continuous deck.

5.3.2 For combustion engines web frames shall generally be fitted at the forward and aft ends of the engine. The web frames are to be evenly distributed along the length of the engine.

5.3.3 Where combustion engines are fitted aft, stringers spaced 2,6 m apart are to be fitted in the engine room, in alignment with the stringers in the after peak, if any.

E. Appendages and Internals

1. Bilge keel

1.1 Design references

References regarding scantling requirements for the bilge keel are summarized in Table 7.2.

Where applicable, the effects of longitudinal hull girder bending stresses on the bilge keel are to be considered.

1.2 Where bilge keels of profiles are provided they are to be welded to continuous flat bars, which are connected to the shell plating with their flat side by means of a continuous watertight welded seam, see bottom of Fig. 7.1.

The ends of the bilge keels are to have smooth transition zones according to Fig. 7.1, top. The ends of the bilge keels shall terminate above an internal stiffening element.

1.3 Where boxshaped bilge keels according to Fig. 7.2 are provided, the longitudinal plates of the bilge keel are to be connected by full penetration welds in way of the transverse webs. The bilge keel shall be welded to an insert plate of the shell plating.

Other designs may be accepted on the basis of a fatigue strength calculation.

The loads on the bilge keel are defined in Section 5, C.3.1

1.4 The weld connection of bilge keels to the hull structure shall be in accordance with Section 15, C., Table 15.3.

1.5 Any scallops or cut-outs in longitudinal members of bilge keels are to be avoided.

2. Bulwark

2.1 Design references

References regarding scantling requirements for bulwarks are summarized in Table 7.3.

2.2 Plating

The thickness of bulwark plating is to be determined according to the reference in Table 7.3.

Plate bulwarks are to be stiffened at the upper edge by a bulwark rail section.

2.3 Bulwark stays

2.3.1 The bulwark is to be suitably supported by bulwark stays.

2.3.2 The stays are to be fitted above deck beams, beam knees or carlings. It is recommended to provide flat bars in the lower part which are to be effectively connected to the deck plating, see Fig. 7.3

2.4 At the ends of a bulwark or at the expansion joints the connection of the bulwark with the hull has to be established in a way to avoid notch effects.

If no expansion joints are provided or if the bulwark transfers stresses from longitudinal hull girder bending these stresses have to be considered in the design.

2.5 For the connection of bulwarks with the sheer strake B.3. is to be observed.

2.6 Bulwarks are to be provided with freeing ports of sufficient size. See also Section 19, E.

Table 7.2 Bilge keel design reference

Structural element	Design according to	Loads according to Section 5	Remarks
Bilge keel	Direct calculation	$p_{BK} \rightarrow$ C.3.1. $p_s \rightarrow$ C.1.	See 1.2-1.5

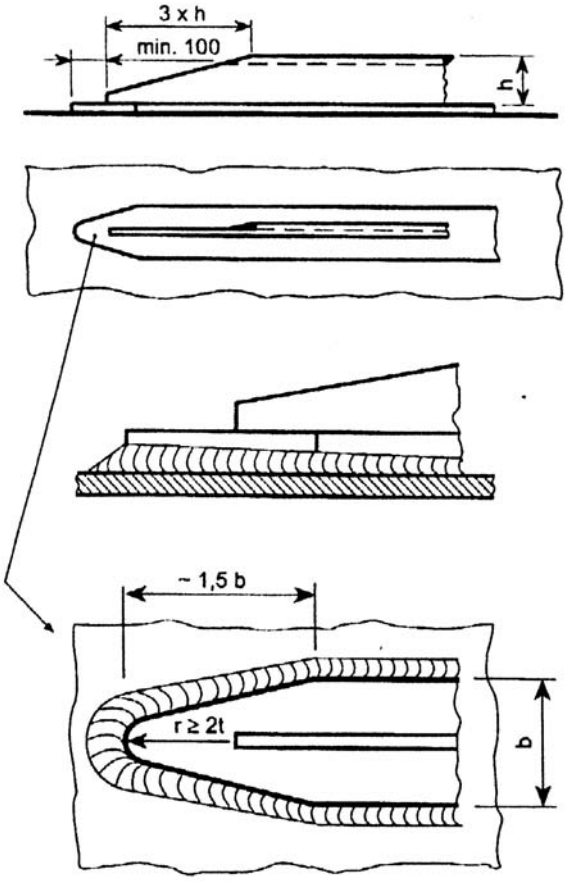

Fig. 7.1 Ends of "profile-type" keels

3. Sea chests

3.1 The scantlings of sea chests are to be determined according to Table 7.1 using the pressure

$$p = 100 \cdot p_v \cdot \gamma_{fdyn} \ [kN/m^2]$$

p_v = blow out pressure at the safety valve [bar].

p_V is not to be less than 2 bar, see also Chapter 107 - Ship Operation Installations and Auxiliary Systems, Section 8

γ_{fdyn} = partial safety factor for dynamic load components according Section 4, Table 4.1

3.2.1 The sea-water inlet opening edges in the shell are to be stiffened related to the stress level. The openings are to be protected by gratings.

3.3 A cathodic corrosion protection with galvanic anodes made of zinc or aluminium is to be provided in sea chests with chest coolers. For the suitably coated plates a current density of 30 $\mu A/m^2$ is to be provided and for the cooling area a current density of 180 $\mu A/m^2$. For details see the TL Rules - Guidelines for Corrosion Protection and Coating Systems, Section 8.

4. Bilge wells

4.1 Bilge wells shall have a capacity of more than 0,2 m^3. Small compartments may have smaller bilge wells. For the use of manhole covers or hinged covers for the access to the bilge suctions, see Chapter 107 - Ship Operation Installations and Auxiliary Systems, Section 8. Bilge wells are to be separated from the shell.

4.2 Small wells for drainage of compartments may be arranged in the double bottom, their depth, however, shall be as small as practicable.

5. Sonar domes

The sonar dome in the forward bottom area has to be designed by direct calculation, considering the various load effects summarized in Section 5, C.3.2.

Table 7.3 Bulwark design references

Structural element	Design according to	Loads acc. to Section 5, if applic.	In-plane stresses acc. to Section 6, E.6., if applicable	Remarks
Plating	Section4, B.3.	$p_s \rightarrow$ C.1. $p_e \rightarrow$ C.2.	σ_{xL}	See 2.2
Bulwark stays	Section 4, C.		-	See 2.3
Bulwark rail sections and longitudinal stiffeners	Section 4, C.		σ_{xL}	

Typical cross section:

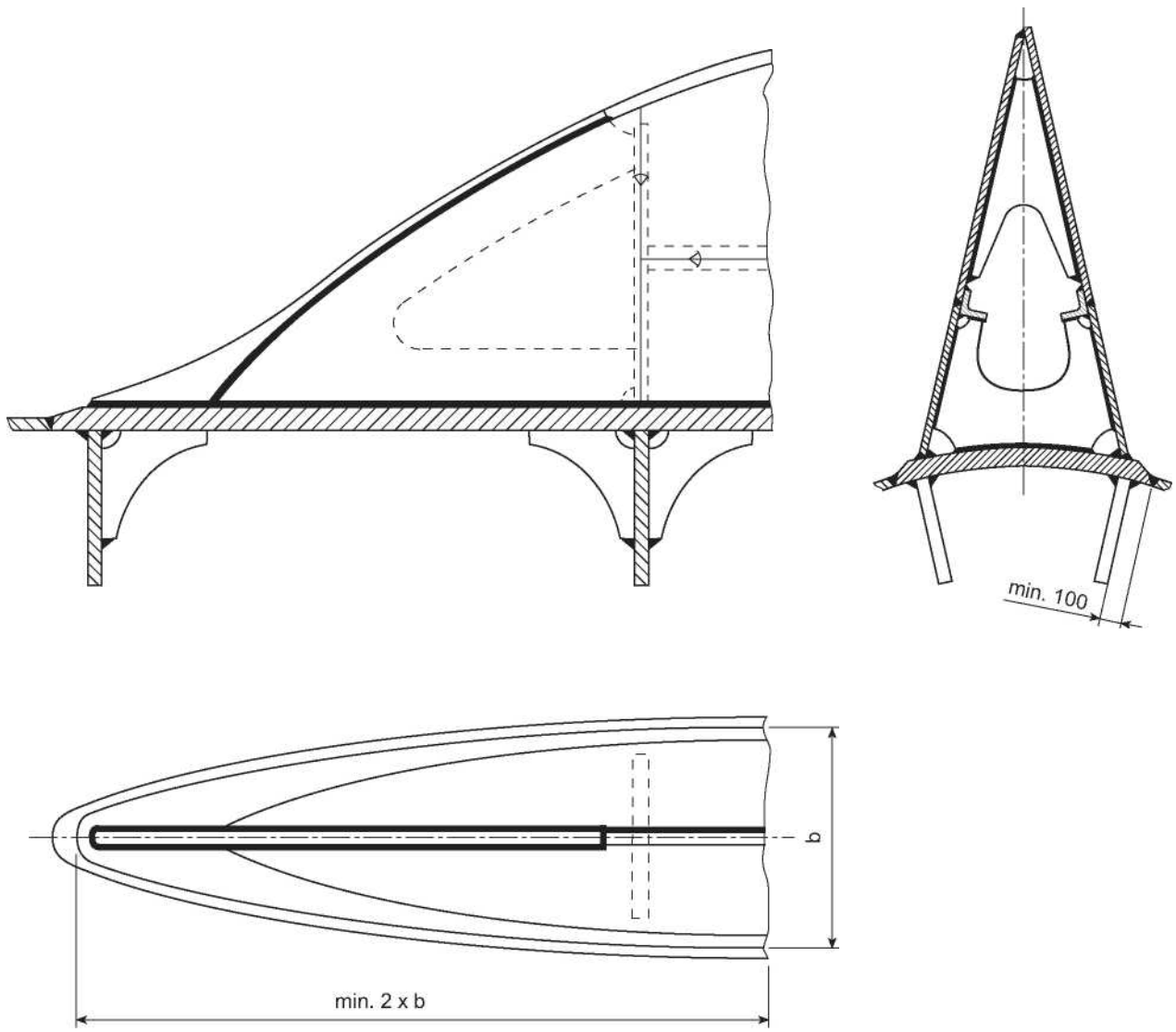

Fig. 7.2 Boxshaped bilge keels

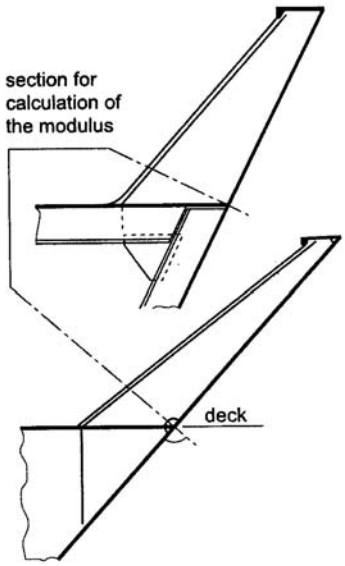

Fig. 7.3 Inclined bulwark stays

F. Special Strengthening

1. Strengthening against harbour and tug manoeuvres

1.1 Scope

In those zones of the side shell which may be exposed to concentrated loads due to tug manoeuvres and fenders the plate thickness, the secondary stiffeners and the primary members must be dimensioned accordingly. For tug manoeuvres these zones are mainly the plates in way of the ship's fore and aft shoulder. The length of the strengthened areas shall not be less than approximately 5 m. The height of the strengthened areas shall extend from about 0,5 m to 1,5 m above design waterline. For tug manoeuvres of ships with L ≥ 100 m at least one strengthened area is to be provided amidships in addition to the two strengthened areas at the ship's shoulders.

The areas relevant for pressure transmitted by fenders are mainly midships depending on the situation at naval bases or visited ports.

Where the side shell thickness so determined exceeds the thickness required in B. it is recommended to specially mark these areas.

1.2 Loads

The force induced by a tug or fender into the hull structure may be determined for known deflection f of fender and/or pile and manoeuvring speed v [m/s] of the ship by the following formula:

$$P_{TF} = \Delta \cdot \frac{v^2}{2 \cdot f} \quad [kN]$$

where Δ_{max} = 100.000 t

If f and/or v are not known more precisely, the force P_{TF} may approximately be calculated as follows:

$\Delta \leq 2100$ t: $P_{TF} = 0{,}08 \cdot \Delta$ [kN]

$2100 < \Delta \leq 17000$ t: $P_{TF} = 170$ [kN]

$\Delta > 17000$ t: $P_{TF} = 0{,}01\ \Delta$ [kN]

1.3 Plating

The plate thickness in the strengthened areas is to be determined by the following formula:

$$t = 33{,}3 \cdot a \cdot \sqrt{\frac{P_{TF} \cdot \gamma_m}{R_{eH}}} + t_K$$

a = spacing of stiffeners [m], a need not to be greater than 0,3m

γ_m = partial safety factor for material resistance according to Section 4, Table 4.1

R_{eH} = minimum yield stress of material [N/mm^2] according to Section 3, B.

Any reductions in thickness for restricted service are not permissible.

1.4 Secondary stiffeners

1.4.1 In the strengthened areas the elastic section modulus of side stiffeners is not to be less than:

$$W = \frac{125 \cdot P_{TF} \cdot \ell \cdot \gamma_m \cdot k_{sp}}{f_p \cdot R_{eH}} \quad [cm^3]$$

ℓ = unsupported span of stiffener [m]

fp,k_{sp} = see Section 4, C.2

for other parameters see 1.2 and 1.3

The web area and the area of the end connection are not to be less than:

$$A_s = 15 \cdot \frac{P_{TF} \cdot \gamma_m}{R_{eh}} \quad [cm^2]$$

1.4.2 Longitudinally stiffened lower decks and vertically stiffened transverse bulkheads are to be investigated for sufficient buckling strength against loads acting in the ship's transverse direction.

1.5 Primary members

1.5.1 The webs of primary members supporting the stiffeners in these areas are to be examined for sufficient buckling strength according to Section 4, H.

1.5.2 The compressive stress in the web of primary members due to the action of the force P_{TF} may be determined by the following formula:

$$\sigma_D = \frac{P_{TF} \cdot 10^3}{c \cdot t_S} \quad [N/mm^2]$$

c = vertical length of application of the force P_{TF}; if c is not known, c = 300 mm may be used as a guidance value

t_S = web thickness [mm]

2. Docking

2.1 General

For ships exceeding 120 m in length, for ships of special design, particularly in the aft body and for ships with a docking load of more than 700 kN/m a special calculation of the docking forces is required.

The proof of sufficient strength can be performed either by a simplified docking calculation or by a direct docking calculation. The number and arrangement of the keel blocks shall comply with the submitted docking plan. Direct calculations are required for ships with unusual overhangs at the ends or with inhomogeneous cargo distribution.

2.2 Simplified docking calculation

The local forces of the keel blocks acting on the bottom structures can be calculated in a simplified manner using the nominal keel block load q_0. Based on these forces sufficient strength must be shown for all structural bottom elements which may be influenced by the keel block forces. The nominal keel block load q_0 is calculated as follows, see also Figure 7.4

$$q_0 = \frac{G_S \cdot C}{L_{KB}} \quad [kN/m]$$

G_S = ship weight during docking [kN]

L_{KB} = length of the keel block range [m]; i.e. in general the length of the horizontal flat keel

C = weighting factor

= 1,25 in general

= 2,0 in the following areas:

- Within 0,075 · L_{KB} from both ends of the length L_{KB}
- Below the main engine
- In way of the transverse bulkheads along a distance of 2 · e

e = distance of plate floors adjacent to the transverse bulkheads [m]; for e no value larger than 1 m needs to be taken.

If a longitudinal framing system is used in the double bottom in combination with a centre line girder it may be assumed that the centre line girder carries 50 % of the force and the two adjacent keel block longitudinals 25 % each.

2.3 Direct docking calculation

If the docking block forces are determined by direct calculation, e.g. by a finite element calculation, considering the stiffness of the ship's body and the weight distribution, the ship has to be assumed as elastically bedded at the keel blocks. The stiffness of the keel blocks has to be determined including the wood layers. If a floating dock is used, the stiffeners of the floating dock are to be taken into consideration.

2.4 Permissible stresses

The permissible equivalent stress σ_V is:

$$\sigma_V = \frac{R_{eH}}{1,05}$$

2.5 Buckling strength

The bottom structures are to be examined according to Section 4, H. For this purpose a safety factor ν = 1,05 has to be applied.

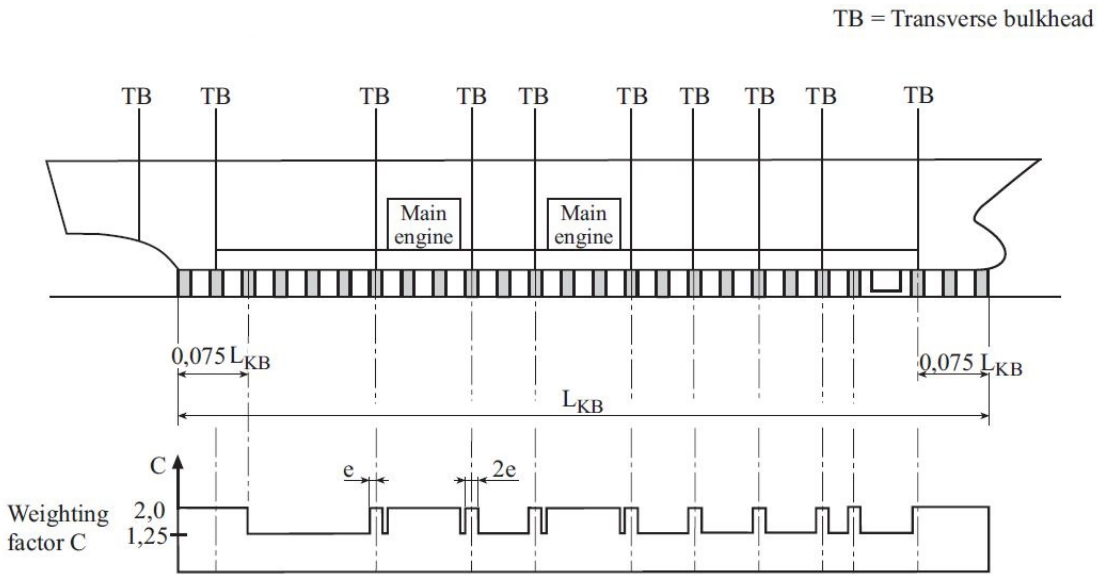

Fig. 7.4 Definition of weighting factor C

3.1 Global strength

For naval landing ships additional loads on the bottom from the contact with the landing beach at about 30 -50 % of the bottom area from the forward end must be expected. Therefore an investigation of this additional load case is required.

3.2 Local strength

Increasing of local strength in the forward bottom area shall include:

- Bottom plate thickness to be increased by 10 %
- Continuous welding of primary structure
- Lugged connections or fully welded collars for longitudinals as shown in Fig. 7.5
- Transverse floors and side girders in relevant distance and sufficient number

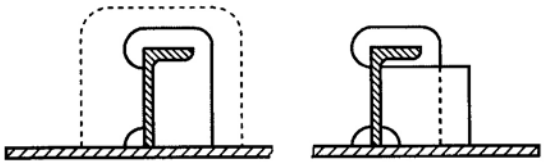

Fig. 7.5 Recommended connection of longitudinal

3.3 Barwhales

Local strength of the forward bottom structure is endangered by concentrated pressure caused by uneven surface of the beach. The bottom plating can be protected against such loads if longitudinal barwhales are provided in the contact area, which should be of softer material and preferably be bolted to a special fixing structure at the bottom of the ship, see Fig. 7.6.

The barwhales are to be free of projections or other discontinuities which could lead to damage of the shell plating. The ends shall be tapered at a relation of at least 1:3.

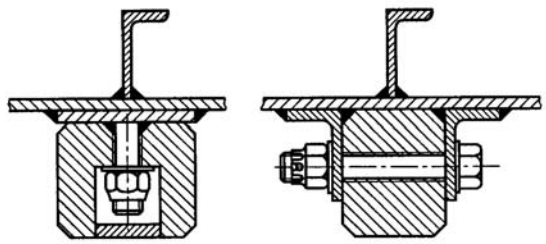

Fig. 7.6 Fixing of barwhales of softer material

SECTION 8

DECKS AND LONGITUDINAL WALLS

A. General, Definitions

1. General

1.1 Scope

This Section applies to deck plating for strength decks, local decks and helicopter decks with deck beams, longitudinals as well as the supporting girders and transverses. Watertight decks exposed to weather and internal decks - if watertight or non-watertight - are to be considered differently according to Table 8.1. Longitudinal walls, which can be designed with the same formulae, are also included in this Section.

1.2 Scantlings for isolated funnels are to be determined as longitudinal walls and transverse walls, see Section 9, C.

1.3 Definitions

p_{dw} = total deadweight load [kN/m] according to Section 5, I.

p_L = load on decks [kN/m^2], according to Section 5,F.

P_{NWT} = load on non-watertight partitions [kN/m^2] according to Section 5, D.2.

p_{Sdyn} = external sea load on deck [kN/m^2] according to the deck height above baseline, see Section 5, C.1.2.

p_{T1} = design pressure for tanks [kN/m^2] according to Section 5, G.1.3

p_{WT} = total load on watertight partitions [kN/m^2] according to Section 5, D. 1.

$p_{military}$ = additional loads from military equipment [kN/m^2] according to Section 5, H.

R_{eH} = minimum nominal upper yield stress [N/mm^2] according to Section 3, B. or D.

γ_m = partial safety factor for material resistance according to Section 4, Table 4.1

2. Design references

2.1 Table 8.1 summarizes the scantling requirements for watertight and non-watertight decks and longitudinal walls.

2.2 Buckling strength

The elements of decks and longitudinal walls are to be examined for sufficient buckling strength according to Section 4, H.

B. Plating

1. General

1.1 The thickness of the plating shall be as out-lined in Table 8.1. At no point the thickness shall be less than 3,0 mm.

1.2 Where a sheathing is used, attention is to be paid that the sheathing does not affect the steel. The sheathing is to be effectively fitted to the deck. De- formations of the deck plating have to be considered.

1.3 If the thickness of the strength deck plating is less than that of the side shell plating, a stringer plate is to be fitted having the width of the sheerstrake and the thickness of the side shell plating, see Section 7, B.3.

1.4 The welded connection between strength deck and sheerstrake may be effected by fillet welds according to Section 15, Table 15.3. Where the plate thickness exceeds approximately 25 mm, a double bevel weld connection according to Section 15, B.3.2 shall

be provided for instead of fillet welds. Bevelling of the deck stringer to 0,65 times of its thickness in way of the welded connection is admissible. In special cases a double bevel weld connection may also be required, where the plate thickness is less than 25 mm.

1.5 Areas of structural discontinuities, e.g. at end of superstructures, have to be carefully designed and analyzed. The strength deck plating is to be sufficiently extended into a superstructure.

Table 8.1 Deck and longitudinal wall design references

Structural elements	Design according to	Loads according to Section 5, if applicable	Remarks
Exposed to weather:			
Plating	Section 4, B.3.	$p_{Sdyn} \rightarrow$ C.1 $p_L \rightarrow$ F. $p_{T1} \rightarrow$ G. $p_{military} \rightarrow$ H. $p_{dw} \rightarrow$ I.	See B.
Longitudinal stiffeners	Section 4, Table 4.3		See C.
Transverse Stiffeners			
Longitudinal girders	Section 4, D.		See D.
Transverse girders			
Pillars	Section 4, H.4.	from decks above	
Internal:			
Plating	Section 4, B.3	$p_L \rightarrow$ F. $p_{T1} \rightarrow$ G. $p_{WT} \rightarrow$ D.1 $p_{NWT} \rightarrow$ D.2 $p_{military} \rightarrow$ H. $p_{dw} \rightarrow$ I.	See B.
Longitudinal stiffeners	Section 4, Table 4.3.		See C.
Transverse stiffeners			
Longitudinal girders	Section 4, D.		See D.
Transverse girders			
Pillars	Section 4, H.4.	from decks above	

1.6 The deck structure inside line of openings is to be so designed that the compressive stresses acting in the ship's transverse direction can be safely transmitted. Proof of buckling strength is to be provided according to Section 4, H.

2. Thickness of decks for wheel loading

The thickness of deck plating for wheel loading is to be determined by the following formula:

$$t = c \cdot \sqrt{\frac{P_E \cdot \gamma_m}{R_{eH}}} + t_K \quad [mm]$$

P_E = total load in [kN] of one wheel or group of wheels on a plate panel a . b as defined in Section 5, F.2.3 and H.3.2.1

There are defined also loads for tracked vehicles.

c = factor according to the following formulae:

for the aspect ratio $\frac{b}{a} = 1$:

for the range $0 < \frac{f}{F} < 0{,}3$:

$$c = 22{,}9 - 12{,}25\sqrt{\frac{f}{F} \cdot \left(3{,}4 - 4{,}4 \cdot \frac{f}{F}\right)}$$

for the range $0{,}3 \le \frac{f}{F} \le 1{,}0$:

$$c = 14{,}7 - 4{,}922 \cdot \frac{f}{F}$$

for the aspect ratio $\frac{b}{a} \ge 2{,}5$:

for the range $0 < \frac{f}{F} < 0{,}3$:

$$c = 24{,}5 - 12{,}25\sqrt{\frac{f}{F} \cdot \left(5{,}2 - 7{,}2 \cdot \frac{f}{F}\right)}$$

for the range $0{,}3 \le \frac{f}{F} \le 1{,}0$:

$$c = 14{,}7 - 6{,}33 \cdot \frac{f}{F}$$

for intermediate values of b/a the factor c is to be obtained by direct interpolation.

f = print area of wheel or group of wheels. If it is not known the definition of Section 5, F.2.1.2 andF.2.1.3 can be used.

F = area of plate panel a. b according to Fig. 8.1

a = width of smaller side of plate panel (in general beam spacing)

b = width of larger side of plate panel

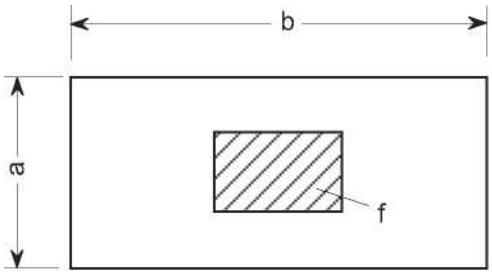

F need not be taken greater than 2,5 a^2.

Fig. 8.1 Area of plate panel influenced by a wheel print

In case of narrowly spaced wheels these may be grouped together to one wheel print area.

C. Secondary Stiffeners

1. Scantlings

The design requirements for secondary stiffeners are summarized in Table 8.1.

2. End attachments

2.1 Transverse deck beams are to be connected to the frames by brackets according to Section 4, C.3.3.

2.2 Deck beams may be attached to girders beside hatch openings by double fillet welds where there is no constraint. The length of weld is not to be less than 0,6 x depth of the section.

2.3 Where deck beams are to be attached to coamings of large openings and girders of considerable rigidity (e.g. box girders), brackets are to be provided.

2.4 Regarding the connection of deck longitudinals to transverses and bulkheads, Section 7, C.3. is to be observed.

D. Primary Members

1. General

1.1 The scantling requirements for girders, pillars, etc. are summarized in Table 8.1.

1.2 Face plates are to be stiffened by tripping brackets. At girders having symmetrical face plates the tripping brackets are to be arranged alternately on both sides of the web.

1.3 End attachments of primary members in way of supports are to be so designed that the bending moments and shear forces can be transferred. Bulkhead stiffeners under girders are to be sufficiently dimensioned to support the girders.

2. Transverse members

The design shall follow the references given in Table 8.1.

3. Longitudinal members

3.1 The design shall follow the references given in Table 8.1.

3.2 Below strength decks girders are to be fitted in alignment with longitudinal walls of superstructures and deckhouses above, which are to extend at least over three frame spacings beyond the end points of the longitudinal walls. The girders are to overlap with the longitudinal walls by at least two frame spacings.

E. Helicopter Deck

If this deck is also used for drone (UAV) operation, the loads would normally be less and therefore not form the critical case.

For take-off and landing decks for fixed wing aircraft compare Section 23, B.4.

1. General

1.1 The starting/landing zone is to be designed for the largest helicopter type expected to use the helicopter deck. For helicopter decks forming a part of the hull girder the requirements of A. - D. are to be considered too.

1.2 For scantling purposes, other loads (cargo, snow/ice, etc.) are to be considered simultaneously or separately, depending on the conditions of operation to be expected. Where these conditions are not known, the data referenced in 2. may be used as a basis.

1.3 The following provisions in principle apply to starting/landing zones on decks or on decks of superstructures and deckhouses, see Section 23, B.3.

Note

For ships of NATO nations reference is made to publication APP2(F)/MPP2(F) "Helicopter Operations from Ships other than Aircraft Carriers (HOSTAC)".

2. Design loads

The different loads as defined in Section 5, H.3.2. have to be considered separately.

3. Plating

3.1 The thickness of the plating is to be determined according to B.2.

3.2 Proof of sufficient buckling strength is to be carried out in accordance with Section 4, H. for structural elements subjected to compressive stresses.

4. Secondary stiffeners

Bending moments and shear forces are to be calculated for the most unfavourable position of the helicopter with one or two loads P_E, whichever is possible, distributed on the stiffener.

5. Primary members

Plastic design may be used in case of crash landing for the primary structure of the helicopter deck, see Section 4, E.

If helicopter landing decks are situated on pillars the deadweight of the deck and the acceleration components a_x, a_y and a_z as well as the wind load on the deck structure have to be considered for dimensioning.

SECTION 9

TRANSVERSE BULKHEADS AND WALLS

A. General, Definitions

1. Scope

This Section applies to watertight and non-watertight bulkheads as well as watertight and non-watertight transverse walls of the ship, see Table 9.1. Inclined walls with an inclination to the horizontal of less than or equal 45° will be treated as deck, see Section 6, Fig. 6.4 and Section 8.

The special requirements for tanks in the hull are given in Section 10.

2. Definitions

P_E = single point load [kN] according to Section 5,F.2.

p_L = design load on internal decks [kN/m^2] according to Section 5, F.

p_{NWT} = design load on non-watertight divisions [kN/m^2] according to Section 5, D.2.

p_S = design pressure for walls exposed to see [kN/m^2], see Section 5, C.1.

p_{T1} = design pressure for tanks [kN/m^2] according to Section 5, G.1.3

p_{WT} = load on watertight divisions [kN/m^2] according to Section 5, D.1.

B. Arrangement and Design of Watertight Bulkheads

1. Arrangement of watertight bulkheads

1.1 Watertight subdivision

The watertight subdivision will be determined in general by the damage stability calculations according to Section 2, C.2.3.

1.2 Collision bulkhead

1.2.1 If a collision bulkhead is arranged, it shall extend watertight up to the bulkhead deck. Steps or recesses may be permitted if the conditions of 1.1 are observed.

1.2.2 In ships having continuous or long superstructures, the collision bulkhead shall extend to the first deck above the bulkhead deck. The extension need not be fitted directly in line with the bulkhead below, provided the requirements of 1.1 are fulfilled and the scantlings of the part of the bulkhead deck which forms the step or recess are not less than required for a collision bulkhead.

Openings with weathertight closing appliances may be fitted above the bulkhead deck in the collision bulkhead and in the aforementioned step and recess. However the number of openings shall be reduced to the minimum compatible with the design and proper working of the ship.

1.2.3 No doors, manholes, access openings, or ventilation ducts are permitted in the collision bulkhead below the bulkhead deck and above the double bottom.

Where pipes are piercing the collision bulkhead below the bulkhead deck, screw down valves are to be fitted directly at the collision bulkhead.

Where such valves are fitted within the forepeak they are to be operable from above the freeboard deck. Where a readily accessible space which is not a hold space is located directly adjacent to the forepeak, e.g. a bow-thruster space, the screwdown valves may be fitted within this space directly at the collision bulkhead and need not be operable from a remote position.

1.3 Stern tube bulkhead

1.3.1 If a stern tube bulkhead is provided, it shall, in general, be so arranged that the stern tube and the rudder trunk are enclosed in a watertight compartment. The stern tube bulkhead should extend to the bulkhead deck or to a watertight platform situated above the design waterline.

1.3.2 Where a complete stern tube bulkhead is not practicable, only watertight void spaces enclosing the stern tube entrances, providing the possibility for a second watertight sealing may be arranged. The same arrangement can be applied for the rudder trunk.

1.4 Remaining watertight bulkheads

1.4.1 The remaining watertight bulkheads, which are in general depending on the type of the naval ship and the requirements for damage stability defined in Section 2, C., have to be extended to the bulkhead deck. Wherever practicable, they shall be situated in one frame plane, otherwise those portions of decks situated between parts of transverse bulkheads are to be watertight. In horizontal parts of bulkheads the requirements for decks according to Section 8 have to be applied.

1.4.2 Bulkheads shall be fitted separating the machinery spaces from service spaces and accommodation rooms forward and aft and made watertight up to the bulkhead deck.

2. Watertight transverse walls

Plating and stiffeners of watertight transverse walls other than tank walls have to be designed in accordance with C.

3. Openings in watertight bulkheads

3.1 General

3.1.1 Type and arrangement of doors are to be submitted for approval.

3.1.2 Regarding openings in the collision bulkhead see 1.2.2 and 1.2.3.

3.1.3 In the other watertight bulkheads, watertight doors may be fitted.

3.1.4 On ships for which proof of floatability in damaged condition is to be provided, hinged doors are permitted above the most unfavourable damage water-line for the respective compartment only.

3.1.5 Watertight doors are to be sufficiently strong and of an approved design. The thickness of plating is not to be less than the minimum thickness according to C.2.

3.1.6 Openings for watertight doors in the bulkheads are to be effectively framed such as to facilitate proper fitting of the doors and to guarantee perfect water tightness.

3.2 Bulkhead doors

3.2.1 Hinged doors

Hinged doors are to be provided with rubber or equivalent sealings and toggles or other approved closing appliances which guarantee a sufficient sealing pressure. The toggles and closing appliances are to be operable from both sides of the bulkhead. Hinges are to have oblong holes if no pneumatic activation of the sealing is provided. Bolts and bearings are to be of corrosion resistant material. A warning notice requiring the doors to be kept closed at sea is to be fitted at the doors.

3.2.2 Sliding doors

Sliding doors are to be carefully fitted and are to be properly guided in all positions. Heat sensitive materials are not to be used in systems which penetrate watertight subdivision bulkheads, where deterioration of such systems in the event of fire would impair the watertight integrity of the bulkheads.

The closing mechanism is to be safely operable from each side of the bulkhead and from above the bulkhead deck by a power operated mechanism. If closing of the door cannot be observed with certainty, an indicator is to be fitted which shows, if the door is closed or open; the indicator is to be installed at the position from which

the closing is operated.

3.2.3 Operation requirements

Power-operated doors are to be capable of being reliably closed against an adverse list of 15°. The closing time, from the time each door begins to move to the time it reaches the completely closed position, shall in no case be less than 20 seconds or more than 40 seconds with the ship in upright position. Being closed from the central operating console all doors shall be in closed position within 60 seconds.

Hand-operated closing appliances are to be so designed that the doors can be closed against a list of 15° and that the closing time with the ship upright will not exceed 90 seconds.

Consideration shall also be given to the forces which may act on either side of the door as may be experienced when water is flowing through the opening applying a static head equivalent to a water height of at least 1 m above the sill on the centreline of the door.

3.2.4 Tests

Before being fitted, the watertight bulkhead doors, together with their frames, are to be tested by a head of water corresponding to the bulkhead deck height. After having been fitted, the doors are to be hose- or soap-tested for tightness and to be subjected to an operational test.

3.3 Penetrations through watertight bulkheads

3.4 Where bulkhead fittings are penetrating watertight bulkheads, care is to be taken to maintain watertightness.

For penetrations through the collision bulkhead 1.2.3 is to be observed.

4. Gastight bulkheads

4.1 Gastight bulkheads have to be designed like watertight bulkheads or tank walls, respectively.

4.2 Watertight bulkheads must generally not be gastight. Special additional efforts have to be made for the tightness of the connections of the construction elements.

4.3 Gastight bulkhead penetrations have to be approved by TL.

4.4 For the final testing of the gas tightness of a bulkhead a special test procedure has to be agreed. This procedure may include the complete space to be gastight or may be concentrated on welding joints of the bulkhead. The regulations of the Naval Authority have to be observed.

C. Scantlings of Single Plate Bulkheads and Transverse Walls

1. Design references

1.1 The design of single plate bulkheads shall follow the references given in Table 9.1. Bulkheads of different types have to be specially considered and agreed with TL.

1.2 Where spaces are intended to be used as tanks, their bulkheads and walls are to comply with the requirements of Section 10.

1.3 If a bulkhead or wall is non-watertight, but contributes to the overall structural strength of the ship, the scantlings have to be evaluated in general as for watertight bulkheads or web frames, see Section 7, D.5., at the same location.

2. Plating

2.1 At no point the thickness shall be less than 3,0 mm.

2.2 Stern tube bulkheads are to be provided with a strengthened plate in way of the stern tube.

2.3 In areas where concentrated loads due to ship manoeuvres at naval bases may be expected, the buck

ling strength of bulkhead plate fields directly attached to the side shell, is to be examined according to Section 7, F.1.

3. Secondary stiffeners

3.1 In horizontal parts of bulkheads, the stiffeners are also to comply with the requirements for deck beams according to Section 8.

3.2 The end attachment of secondary stiffeners shall comply with Section 4, C.3.

3.3 Unbracketed bulkhead stiffeners are to be connected to the decks by welding. The length of weld is to be at least 0,6 x depth of the section.

4. Primary members

4.1 Regarding effective width Section 4, G. has to be observed.

4.2 Frames are to be connected to transverse deck beams by brackets according to Section 4, C.3.3.

4.3 The transverse structure of superstructures and deckhouses is to be sufficiently dimensioned for stiffness by a suitable arrangement of end bulkheads, web frames, steel walls of cabins and casings, or by other measures.

4.4 For the design of girders and web frames of bulkheads plastic hinges can be taken into account, see Section 4, D.

D. Corrugated Bulkheads.

1. Design references

The design shall follow the references given in Table 9.2.

2. Plating

For the design of the plating the spacing a will be the greater one of the values b or s [m] according to 3., see Fig. 9.1.

3. Section modulus

The required section modulus of a corrugated bulkhead element is to be determined by direct calculation. For the spacing a, the width of an element e [m] according to Fig. 9.1 is to be taken. For the end attachment see Section 4, C.3.4.

For flanges of corrugated elements subject to compressive stresses the effective width according to Section 4, H.2.2 has to be considered.

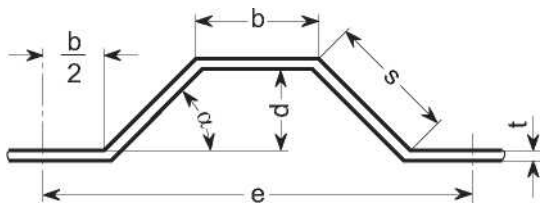

e	=	width of element	[cm]
b	=	breadth of faceplate	[cm]
s	=	breadth of web plate	[cm]
d	=	distance between face plates	[cm]
t	=	plate thickness	[cm]
α	≥	45°	

Fig. 9.1 Dimensions of a corrugated bulkhead element

E. Shaft Tunnels

1. Design references

The design shall follow the references given in Table 9.3.

2. General

2.1 Shaft and stuffing box are to be accessible. Where one or more compartments are situated between stern tube bulkhead and engine room, a watertight shaft tunnel is to be arranged. The size of the shaft tunnel is to be adequate for service and maintenance purposes.

2.2 The access opening between engine room and shaft tunnel is to be closed by a watertight sliding door complying with the requirements according to B.3.2.2. For extremely short shaft tunnels watertight doors between tunnel and engine room may be dispensed with subject to special approval.

3. Scantlings

The scantlings are to be determined according to Sections 8, 9, 10 whichever is applicable.

Table 9.1 Bulkhead and transverse wall design references

Structural element	Design according to	Loads according to Section 5, if applicable	Remarks
Watertight:			
Plating	Section 4, B.3.	p_S → C.1 p_{WT} → D.1. p_{T1} → G.	See 2.
Stiffeners	Section 4, Table 4.3		See 3.
Girders	Section 4, D.		See 4.
Non-watertight:			
Plating	Section 4, B.3.	p_{NWT} → D.2.	See 2.
Stiffeners	Section 4, Table 4.3		See 3.
Girders	Section 4, D.		See 4.

Table 9.2 Corrugated bulkhead design references

Structural element	Design according to	Loads according to Section 5, if applicable	In-plane stresses, if applicable	Remarks
Watertight:				
Plating, vertically corrugated	Section 4, B.3.	p_{WT} → D.1. p_{T1} → G.	σ_z, τ_{yz} **(1)**	See 2. and 3.
Plating, horizontally corrugated			σ_y, τ_{yz} **(1)**	
Non-watertight:				
Plating, vertically corrugated	Section 4, B.3.	p_{NWT} → D.2.	σ_z, τ_{yz} **(1)**	See 2. and 3.
Plating, horizontally corrugated			σ_y, τ_{yz} **(1)**	
(1) *Due to bending of corrugation*				

Table 9.3 Shaft tunnel design references

Structural element/ special checks	Design according to	Loads according to Section 5	Remarks
Plating	Section 4, B.3.	p_{WT} → D.1	See 3.
Stiffeners	Section 4, Table 4.2		See 3.
Girders	Section 4, D.		

SECTION 10

TANK STRUCTURES

A. General, Definitions

1. General

1.1 Scope

This Section applies to all kinds of tanks with the tank boundaries forming a direct part of the hull structure. In addition the requirements for detached tanks and the procedure of testing for tightness are given.

1.2 Subdivision of tanks

All tanks are to be suitably subdivided by bulkheads or swash bulkheads in order to avoid excessive liquid sloshing.

1.3 Air, overflow and sounding pipes

Each tank is to be fitted with air pipes, overflow pipes and sounding pipes. The air pipes are to be led to above the exposed deck. The arrangement is to be such as to allow complete filling of the tanks. See also Section 19, F.

The sounding pipes are to be led to the bottom of the tanks, see also Chapter 107 - Ship Operation Installations and Auxiliary Systems, Section 8, R.

1.4 Forepeak tank

Oil is not to be carried in a forepeak tank.

1.5 Separation of oil fuel tanks from tanks for other liquids

1.5.1 Oil fuel tanks are to be separated from tanks for lubricating oil, hydraulic oil and potable water by cofferdams.

1.5.2 Upon special approval on small ships the arrangement of cofferdams between oil fuel and lubricating oil tanks may be dispensed with provided that:

- The common boundary is continuous, i.e. it does not abut at the adjacent tank boundaries, see Fig. 10.1
- Where the common boundary cannot be constructed continuously according to Fig. 10.1, the fillet welds on both sides of the common boundary are to be welded in two layers and the throat thickness is not to be less than 0,5 x t (t = plate thickness).
- Stiffeners or pipes do not penetrate the common boundary
- The corrosion addition t_K for the common boundary is not less than 1,0 mm.

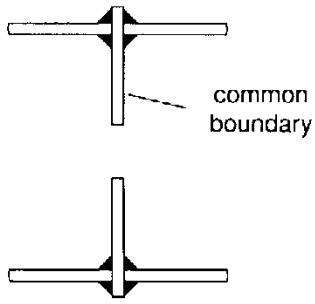

Fig. 10.1 Welding at not continuous tank boundaries

1.5.3 Oil fuel tanks adjacent to lubricating oil circulation tanks are subject to the provisions of Chapter 107 - Ship Operation Installations and Auxiliary Systems, Section 8, G. in addition to the requirements stipulated in 1.5.2 above.

1.6 Double bottom tanks

1.6.1 Where practicable, lubricating oil discharge tanks or circulating tanks shall be separated from the shell.

1.6.2 Manholes for access to fuel oil double bottom tanks situated under cargo oil tanks are not permitted in cargo oil tanks nor in the engine rooms.

1.7 Potable water tanks

1.7.1 Potable water tanks shall be separated from tanks containing liquids other than potable water, ballast water, distillate or feed water.

1.7.2 In no case sanitary arrangement or corresponding piping are to be fitted directly above the potable water tanks.

1.7.3 Manholes arranged in the tank top are to have sills.

1.7.4 If pipes carrying liquids other than potable water are to be led through potable water tanks, they are to be fitted in a pipe tunnel.

1.7.5 Air and overflow pipes of potable water tanks are to be separated from pipes of other tanks.

1.8 Cross references

1.8.1 For pumping and piping, see also Chapter 107-
Ship Operation Installations and Auxiliary Systems, Section 8. For oil fuel tanks see also Chapter 107 – Ship Operation Installations and Auxiliary Systems, Section 8, G.

1.8.2 Where tanks are provided with cross flooding arrangements the increase of the pressure head is to be taken into consideration.

2. Definitions

p_{T1} = design pressure for tanks [kN/m^2] according to Section 5, G.1.3

p_{T2} = maximum static test pressure with freshwater for tanks [kN/m^2] according to D.4.

p_{WT} = load on watertight partitions [kN/m^2] according to Section 5, D.1.

B. Scantlings

1. General

1.1 If the boundaries of tanks are formed by integrated structural elements of the ship, their dimensioning has to follow the definitions in the Sections for the relevant parts. The requirements of this Section have to be observed additionally.

1.2 Detached tanks, which are independent from the ship's structure, are to be designed according to C.

2. Plating

The minimum thickness is 3,0 mm, for the corrosion addition see Section 4, F.

3. Stiffeners and girders

3.1 The buckling strength of the webs is to be checked according to Section 4, H.

3.2 The section moduli and shear areas of horizontal stiffeners and girders are to be determined according to Section 4, Table 4.3.

C. Detached Tanks

1. Design references

The design references for detached tanks are summarized in Table 10.1.

2. Plating

2.1 The minimum thickness is 3,0 mm, for the corrosion addition see Section 4, F.

2.2 For corrugated tank walls see Section 9, D.

2.3 Special consideration has to be given to the avoidance of vibrations.

3. Arrangement

3.1 Detached tanks are to be adequately secured

against forces due to the ship's motions. The forces can be calculated considering the acceleration components given in Section 5, B.

3.2 Detached tanks are to be provided with anti-floatation devices. It is to be assumed that the flooding reaches the design water line, for ships with proven damage stability the extreme damage waterline. The stresses in the anti-floatation devices caused by the floatation forces are not to exceed the material's yield stress.

3.3 Fittings and pipings on detached tanks are to be protected by battens. Gutterways are to be fitted on the outside of tanks for draining any leakage oil.

Table 10.1 Detached tanks design references

Structural element	Design according to	Loads if applicable according to	Remarks
Plating	Section 4, B.3.	p_{T1} → Section 5, G. p_{WT} → Section 5, D.1 p_{T2} → D.4.	See 2.
Stiffeners	Section 4, Table 4.3		
Girders	Section 4, D.		

D. Testing for Tightness

1. Testing of fuel oil, ballast, trimming, feed water, fresh water and anti-rolling tanks is to be effected by a combination of a leak test by means of air pressure and an operational test by means of water or the liquid for which the tank is intended to be used. The air pressure is not to exceed 0,2 bar gauge. The increased risk of accident while the tanks are subjected to the air pressure is to be observed.

2. Where one tank boundary is formed by the ship's shell, the leak test is to be carried out before launching. For all other tanks leak testing may be carried out after launching. Erection welds as well as welds of assembly openings are to be coated **(1)** after the leak test is carried out. This applies also to manual weld connections of bulkheads with the other tanks boundaries and of collaring arrangements at intersections of tank boundaries and e.g. frames, beams, girders, pipes etc. If it is ensured that in adjacent tanks the same type of liquid is carried, e.g. in adjacent ballast tanks, the above mentioned weld connections may be coated **(1)** prior to the leak test.

All other welded connections in tank boundaries may be coated prior to the leak test if it is ensured by suitable means, e.g. by visual examination of the welded connections that the connections are completely welded and the surfaces of the welds do not exhibit cracks or pores.

3. Where the tanks are not subjected to the leak test as per 2. but are leak tested with water the bulk-heads are, in general, to be tested from one side. The testing should be carried out prior to launching or in the dock. Subject to approval by TL, the test may also be carried out after launching. Water testing may be carried out after application of a coating, provided that during the visual inspection as per 2. above the deficiencies are not noted.

4. Test pressure p_{T2}

The maximum test pressure with freshwater is:

$p_{T2} = \rho \cdot g \cdot h_2$ [kN/m^2]

g = acceleration due to gravity

= 9,81 m/s^2

(1) *Shop primers are not regarded as a coating within the scope of these requirements.*

ρ = density of liquid [t/m^3]

h_2 = distance [m] from tank top to:

- top of overflow
- a point 10 Δp above tank top
- a point 2,5m above tank top whichever is the greater

Δp = additional pressure component [bar] created by overflow systems, replenishment at sea, etc., see Section 5, G.

5. The operational test may be carried out when the ship is afloat or during the trial trip. For all tanks the proper functioning of filling and suction lines and of the valves as well as functioning and tightness of the vent, sounding and overflow pipes are to be tested.

SECTION 11

STEM AND STERNFRAME STRUCTURES

A. General, Definitions

1. Scope

This Section defines the dimensioning of plate stem and bulbous bow, stern frame and propeller brackets.

2. Definitions

a_B = spacing of fore-hooks [m]

R_{eH} = minimum upper yield stress [N/mm^2] according to Section 3, B.

γ_m = see Section 4, Table 4.1

B. Plate Stem and Bulbous Bow

1. The thickness of welded plate stems is not to be less than:

$$t = 13{,}3 \cdot a_B \cdot \sqrt{\frac{p \cdot \gamma_m}{R_{eH}}} + t_K \quad [\text{mm}]$$

$$p = 3{,}5\left(0{,}3 \cdot v_0 + 0{,}6 \cdot \sqrt{\mathbf{L}}\right)^2 \quad [\text{kN/m}^2]$$

The plate thickness must not be less than the required thickness according to Section 7, B.

The extension ℓ of the stem plate from its trailing edge aftwards must not be smaller than:

$$\ell = 70 \cdot \sqrt{\mathbf{L}} \quad [\text{mm}]$$

2. Starting from 600 mm above the load waterline, the thickness may gradually be reduced to 0,8 t or the thickness according to Section 7, B, whichever is greater.

3. Plate stems and bulbous bows shall be stiffened as shown in Fig. 11.1.

Note

Large bulbous bows may be subjected to horizontal dynamic pressure p_{Sdyn}, acting from one side only, see Section 5, C.1. 1.2.

For the effective area of p_{Sdyn} , the projected area of the z-x-plane from forward to the collision bulkhead may be assumed.

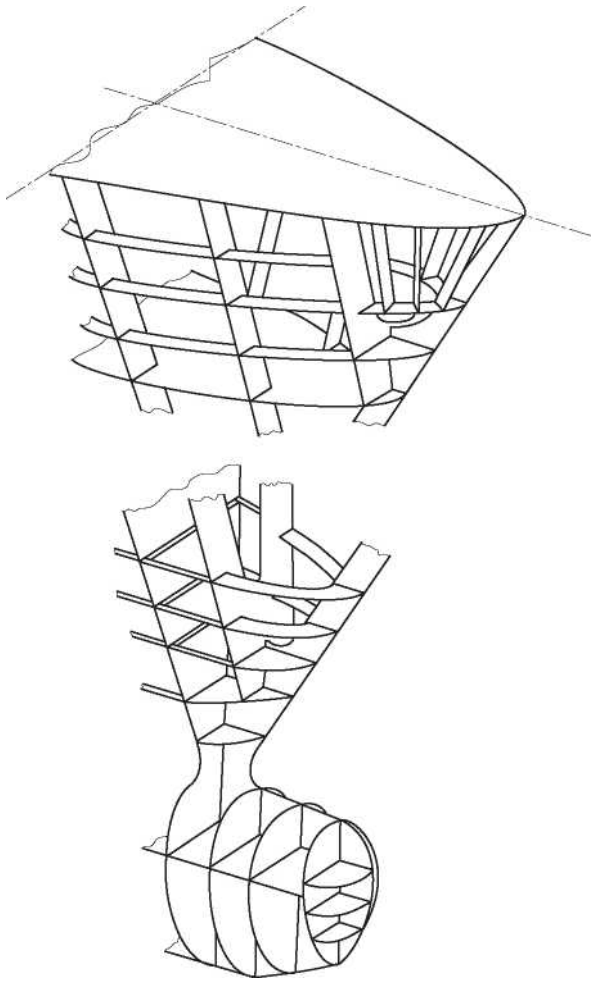

Fig. 11.1 Arrangement of fore hooks and cant frames at the bow

C. Stern frame

1. Stern tube

The stern tube is to be sufficiently supported by the ship's stern structure.

2. Aft structure

The aft structure in way of the propeller has to be investigated for the enforced vibrations by the propeller.

D. Propeller Brackets

1. General

The strut axes should intersect in the axis of the propeller shaft as far as practicable. The angle between the two struts shall be in the range of 60° to 120°. An angle of approximately 90° is recommended where 3- or 5-bladed propellers are fitted or approximately 70° or 110° in case of 4-bladed propeller, respectively.

The struts are to be extended through the shell plating and are to be attached in an efficient manner to the frames and plate floors respectively. The construction in way of the shell is to be carried out with special care.

A watertight compartment of moderate size is to be provided within the strut structure inside the shell to reduce the effect of flooding in case of damage.

In case of welded connection, the struts are to have a weld flange or a thickened part or are to be connected with the shell plating in another suitable manner. The requirements of Section 15, B.4.3 are to be observed.

Welds between propeller brackets and bottom plate are to be tested by NDT adequately.

The struts are to be well rounded at fore and aft end at the transition to the hull as well as at the boss.

If propulsion system elements will be fastened to the hull by means of a cast-resin, fitting is to be carried out according to the specification by the cast-resin manufacturer and in the presence of a representative of manufacturer or an authorized person as well as the **TL** Surveyor.

2. Symbols and definitions

If applicable, the corresponding drawing shall consist following information for each type of propeller bracket:

P_w = rated power in kW

n = shaft speed at rated power, in min^{-1}

d_a = actual outer propeller shaft diameter, in mm

d_i = actual inner shaft diameter, in mm

L_0 = distance between propeller and aft bearing, in m

L_1 = distance between bearings, in m

l = distance between centreline of shaft boss and hull support, in m

Δl = distance between centreline of shaft boss and the intersection of the strut axes, in m

β = angle between centreline of shaft and strut axis, in degree

3. Double arm propeller brackets

3.1 The scantlings of solid or welded double arm shaft struts each are to be determined by following formulas:

t = strut thickness [mm]

$$= \frac{c_1 \cdot d_a}{\sin_\beta}$$

A = area of strut section [cm^2]

$$= \frac{c_2 \cdot d_0^{\,2}}{100} \sqrt{2 + \cos(2\beta)} \cdot \left(1{,}0 + \frac{\Delta l}{2 \cdot l}\right)$$

c_1 = 0,32 for steel

= 0,54 for aluminium alloys

c_2 = 0,30 for steel

= 0,86 for aluminium alloys

$$d_0 = \sqrt[3]{\frac{d_a^4 - d_i^4}{d_a}}$$, but not less than

$$110 \cdot \sqrt[3]{\frac{P_w}{n \cdot \left(1 - \left(\frac{d_i}{d_a}\right)^4\right)} \frac{560}{(R_m + 160)}}$$

The thickness of the plating of constructed propeller brackets shall not be less than:

t_{min} = $0{,}1 \cdot d_a$ [mm]

4. Single arm propeller brackets

4.1 In addition to 3.1 the section modulus shall not be less than:

W = section modulus of strut [cm^3]

$$= \frac{c_3 \cdot l}{1000} \cdot d_0^{2,5} \sqrt{n_0} \cdot \frac{L}{L_1}$$

n_0 = n, but is not to be taken less than 350 min^{-1}

L = $L_0 + L_1$

c_3 = 0,102 for welded steel connection

= 0,291 for welded aluminium connection

Built-up (welded construction) shaft struts should not be used for single arm struts.

For cast resin foundation the value of factor c_3 may be reduced to

c_3' = 0,076 for steel struts which are not welded in way of foundation

= 0,262 for aluminium struts which are not welded in way of foundation

An increased strut length *l* (in comparison with welded strut joints) is generally to be taken into account for cast resin foundations.

For propeller brackets consisting of one strut only a vibration and fatigue analysis has to be carried out and submitted for approval.

A crack detection of the propeller brackets shall be employed every time when the ship is in dry-dock or on a slipway.

5. Intermediate struts

5.1 The scantlings of intermediate struts may be determined by following formulas:

$$t = \frac{c_1 \cdot d_a}{\sin\beta} \cdot \sqrt{\frac{L_0}{L_1}} \quad \text{[mm]}$$

$$A = \frac{c_2 \cdot d_0^{\,2}}{110} \sqrt{2 + \cos(2\beta)} \cdot \left(1{,}0 + \frac{\Delta l}{2 \cdot l}\right) \cdot \frac{L_0}{L_1} \quad [cm^2]$$

5.2 and in addition for single struts:

$$W = \frac{c_3}{1150} \cdot l \cdot d_0^{\,2,5} \sqrt{n_0} \cdot \frac{L \cdot L_0}{L_1^{\,2}} \quad [cm^3]$$

6. Boss

The length of the boss is determined by the necessary length of the bearing for the propeller shaft according to Chapter 104, Section 5, D.5.

The wall thickness of the boss shall not be less than $0{,}2 \cdot d_a$.

SECTION 12

RUDDER AND MANOEUVRING ARRANGEMENT

A. General, Definitions

1. Scope

Rudder stock, rudder horn, rudder coupling, rudder bearings and the rudder body are dealt with in this Section. The steering gear is to comply with Chapter 107 - Ship Operation Installations and Auxiliary Systems, Section 2.

2. Manoeuvring arrangement

2.1 Each naval ship is to be provided with a manoeuvring arrangement which will guarantee sufficient manoeuvring capability.

2.2 The manoeuvring arrangement includes all parts from the rudder and steering gear to the steering position necessary for steering the ship.

For special types of manoeuvring systems, like cycloidal propellers, rudder propeller units, podded drives, etc. see Chapter 104 - Propulsion Plants, Section 7. Regarding the integration of the foundations for podded drives into the hull see Section 14.

2.3 The steering gear compartment shall be readily accessible and, as far as practicable, separated from the machinery space.

2.4 For ice-strengthening see Section 13.

2.5 Rudders and manoeuvring arrangements are to be built in a shock safe way.

3. Structural details

3.1 Effective means are to be provided for supporting the weight of the rudder body without excessive bearing pressure, e.g. by a rudder carrier attached to the upper part of the rudder stock. The hull structure in way of the rudder carrier is to be suitably strengthened.

3.2 Suitable arrangements are to be provided to prevent the rudder from lifting.

3.3 The rudder stock is to be carried through the hull either enclosed in a watertight trunk, or glands are to be fitted above the deepest load waterline, to prevent water from entering the steering gear compartment and the lubricant from being washed away from the rudder carrier. If the top of the rudder trunk is below the deepest waterline two separate stuffing boxes are to be provided.

4. Size of rudder area

The size of the total movable area of the rudder A has to be chosen in order to achieve sufficient manoeuvring capability according to the priority tasks of the naval ship.

For semi-spade rudders 50 % of the projected area of the rudder horn may be included into the rudder area A.

When estimating the rudder area A, the requirements specified in B. 1. should be taken into consideration.

5. Materials

5.1 For materials for rudder stock, pintles, coupling bolts etc. see TL Rules Chapter 2-Materials.

5.2 In general materials having a minimum yield stress R_{eH} of less than 200 N/mm^2 and a minimum tensile strength of less than 400 N/mm^2 or more than 900 N/mm^2 shall not be used for rudder stocks, pintles, keys and bolts. The requirements of this Section are based on a material's minimum yield stress R_{eH} of 235 N/mm^2. If material is used having a R_{eH} differing from 235 N/mm^2, the material factor k_r is to be determined as follows:

$$k_r = \left[\frac{235}{R_{eH}}\right]^{0,75} \quad \text{for } R_{eH} > 235 \text{ N/mm}^2$$

$$k_r = \frac{235}{R_{eH}} \quad \text{for } R_{eH} \le 235 \text{ N/mm}^2$$

R_{eH} = minimum yield stress of material used [N/mm^2], see Section 3

R_{eH} = is not to be taken greater than 0,7 · R_m or 450 N/mm^2, whichever is less. Steels with higher strength properties may be used if the C-content is less than 0,23 %

R_m = tensile strength of the material used [N/mm^2] according to Section 3.

5.3 Before significant reductions in rudder stock diameter due to the application of steels with R_{eH} exceeding 235 N/mm^2 are granted, TL may require the evaluation of the elastic rudder stock deflections. Large deflections should be avoided in order to avoid excessive edge pressures in way of bearings.

5.4 The permissible stresses given in F.1. are applicable for normal strength hull structural steel. When higher strength steels are used, higher values may be used which will be fixed in each individual case.

6. Definitions

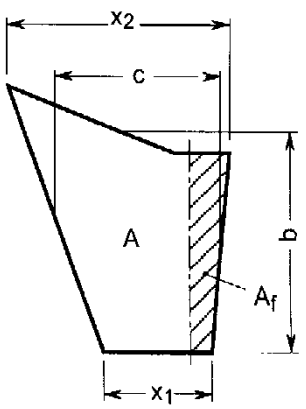

$$c = \frac{x_1 + x_2}{2} \qquad b = \frac{A}{c}$$

Fig. 12.1 Rudder area

C_R = rudder force [N]

Q_R = rudder torque [Nm]

A = total movable area of the rudder [m^2],

A_t = A + area of a rudder horn, if any [m^2]

A_f = portion of rudder area located ahead of the rudder stock axis [m^2]

b = mean height of rudder area [m]

c = mean breadth of rudder area [m], see Fig. 12.1

Λ = aspect ratio of rudder area A_t

$$\Lambda = \frac{b^2}{A_t}$$

v_0 = ahead speed of the ship [kn] as defined in Section 1, B. if this speed is less than 10 kn, v_0 is to be taken as

$$v_{min} = \frac{v_0 + 20}{3} \quad [\text{kn}]$$

v_a = astern speed of ship [kn]; if the astern speed v_a is less than 0,4 · v_0 or 6 kn, whichever is less, determination of rudder force and torque for astern condition is not required. For greater astern speeds special evaluation of rudder force and torque as a function of the rudder angle may be required. If no limitations for the rudder angle at astern condition are stipulated, the factor κ_2 is not to be taken less than given in Table 12.1 for astern condition.

γ_m = partial safety factor for structural resistance, see Section 4, Table 4.1

B. Rudder Force and Torque

1. Rudder force and torque for normal rudders

1.1 The rudder force is to be determined according to the following formula:

$C_R = 132 \cdot A \cdot v^2 \cdot \kappa_1 \cdot \kappa_2 \cdot \kappa_3 \cdot \kappa_t$ [N]

v = v_0 for ahead condition

= v_a for astern condition

κ_1 = coefficient, depending on the aspect ratio Λ

= (Λ + 2)/3, where Λ need not be taken greater than 2

κ_2 = coefficient, depending on the type of the rudder and the rudder profile according to Table 12.1

κ_3 = coefficient, depending on the location of the rudder

= 0,8 for rudders outside the propeller jet

= 1,0 elsewhere, including also rudders within the propeller jet

Table 12.1 Coefficient κ_2 for different types of rudder profiles

Type of rudder/ profile	κ_2	
	Ahead condition	Astern condition
NACA-00 serie Göttingen profiles 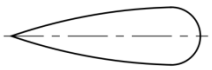	1,1	1,4
flat side profiles 	1,1	1,4
hollow profiles 	1,35	1,4
high lift rudders 	1,7	to be specially considered; if not known: 1,7
mixed profiles (e. g. HSVA)	1,21	1,4

κ_t = coefficient depending on the thrust load coefficient C_{Th}, see Chapter 104 - Propulsion Plants, Section 7, C.

= 1,0 normally

In special cases for thrust load coefficients C_{Th} > 1,0, determination of κ_t according to the following formula may be required:

1.2 The rudder torque is to be determined by the following formula:

$Q_R = C_R \cdot r$ [Nm]

r = $c\,(\alpha - k_b)$ [m],

α = 0,33 for ahead condition,

= 0,66 for astern condition (general),

= 0,75 for astern condition (hollow profiles).

For parts of a rudder behind a fixed structure such as a rudder horn:

α = 0,25 for ahead condition,

= 0,55 for astern condition.

For high lift rudders α is to be specially considered. If not known, α = 0,4 may be used for the ahead condition

k_b = Balance factor as follows:

$$k_b = \frac{A_f}{A}$$

= 0,08 for unbalanced rudders,

r_{min} = 0,1 · c [m] for ahead condition.

Effects of the provided type of rudder / profile on choice and operation of the steering gear are to be observed.

2. Rudder force and torque for rudder blades with cut-outs (semi-spade rudders)

2.1 The total rudder force C_R is to be calculated according to 1.1. The pressure distribution over the rudder area, upon which the determination of rudder torque and rudder blade strength are to be based, is to be derived as follows:

The rudder area may be divided into two rectangular or trapezoidal parts with areas A_1 and A_2, see Fig. 12.2.

The resulting force of each part may be taken as:

$$C_{R1} = C_R \frac{A_1}{A} \quad [N]$$

$$C_{R2} = C_R \frac{A_2}{A} \quad [N]$$

2.2 The resulting torque of each part may be taken as:

$$Q_{R1} = C_{R1} \cdot r_1 \quad [Nm]$$

$$Q_{R2} = C_{R2} \cdot r_2 \quad [Nm]$$

$$r_1 = c_1 (\alpha - k_{b1}) \quad [m]$$

$$r_2 = c_2 (\alpha - k_{b2}) \quad [m]$$

$$k_{b1} = \frac{A_{1f}}{A_1}$$

$$k_{b2} = \frac{A_{2f}}{A_2}$$

A_{1f}, A_{2f} see Figure 12.2

$$c_1 = \frac{A_1}{b_1}$$

$$c_2 = \frac{A_2}{b_2}$$

b_1, b_2 = mean heights of the partial rudder areas A_1 and A_2, (see Fig.12.2).

2.3 The total rudder torque is to be determined according to the following formulae:

$$Q_R = Q_{R1} + Q_{R2} \quad [Nm] \quad \text{or}$$

$$Q_{Rmin} = Q_R \cdot r_{1,2min} \quad [Nm]$$

$$r_{1,2min} = \frac{0,1}{A}(c_1 \cdot A_1 + c_2 \cdot A_2) \quad [m]$$

for ahead condition

The greater value is to be taken.

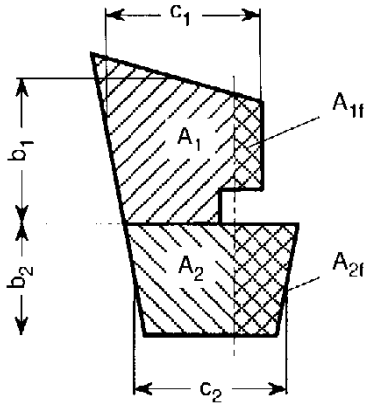

Fig. 12.2 Rudder areas

C. Scantlings of the Rudder Stock

1. Rudder stock diameter

1.1 The diameter of the rudder stock for transmitting the rudder torque is not to be less than:

$$D_t = 4,2 \sqrt[3]{Q_R \cdot k_r} \quad [mm]$$

Q_R = rudder moment, see B.1.2, B.2.2 and B.2.3

k_r = see A.5.2

The related torsional stress is:

$$\tau_t = \frac{68}{k_r} \quad [N/mm^2]$$

1.2 The steering gear is to be determined according to Chapter 107 - Ship Operation Installations and Auxiliary Systems, Section 2 for the rudder torque Q_R as required in B.1.2, B.2.2 or B.2.3 and under consideration of the frictional losses at the rudder bearings.

1.3 In case of mechanical steering gear the diameter of the rudder stock in its upper part which is only intended for transmission of the torsional moment from the auxiliary steering gear may be 0,9 D_t. The length of the edge of the quadrangle for the auxiliary tiller must not be less than 0,77 D_t and the height not less than 0,8 D_t.

1.4 The rudder stock is to be secured against axial sliding. The degree of the permissible axial clearance depends on the construction of the steering engine and on the bearing.

2. Strengthening of rudder stock

If the rudder is so arranged that additional bending stresses occur in the rudder stock, the stock diameter has to be suitably increased. The increased diameter is, where applicable, decisive for the scantlings of the coupling.

For the increased rudder stock diameter the equivalent stress of bending and torsion is not to exceed the following value:

$$\sigma_v = \sqrt{\sigma_b^2 + 3\tau^2} \le \frac{118}{k_r} \quad [N/mm^2]$$

Bending stress:

$$\sigma_b = \frac{10{,}2 \cdot M_b}{D_l^3} \quad [N/mm^2]$$

M_b = Bending moment at the neck bearing in [Nm],

Torsional stress:

$$\tau = \frac{5{,}1 \cdot Q_R}{D_l^3} \quad [N/mm^2]$$

D_1 = Increased rudder stock diameter [cm]

The increased rudder stock diameter may be determined by the following formula:

$$D_l = 0{,}1 \cdot D_t \sqrt[6]{1 + \frac{4}{3}\left[\frac{M_b}{Q_R}\right]^2}$$

Q_R = rudder moment, see B.1.2, B.2.2 and B.2.3

D_t = see 1.1.

Note:
Where a double-piston steering gear is fitted, additional bending moments may be transmitted from the steering gear into the rudder stock. These additional bending moments are to be taken into account for determining the rudder stock diameter.

3. Analysis

3.1 General

The evaluation of bending moments, shear forces and support forces for the system rudder - rudder stock may be carried out for some basic rudder types as shown in Figs. 12.3 and 12.4 as outlined in 3.2 - 3.3.

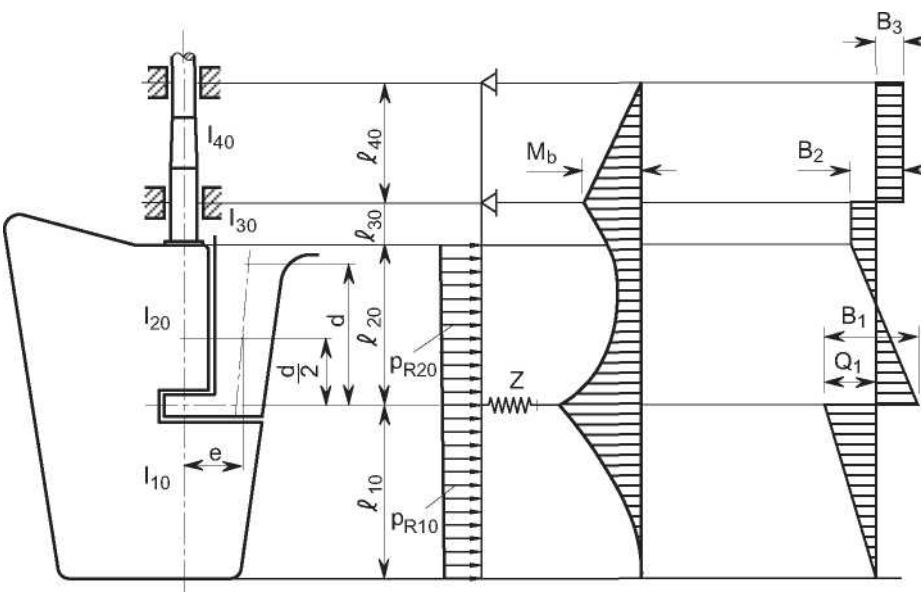

System

Fig. 12.3 Semi-spade rudder

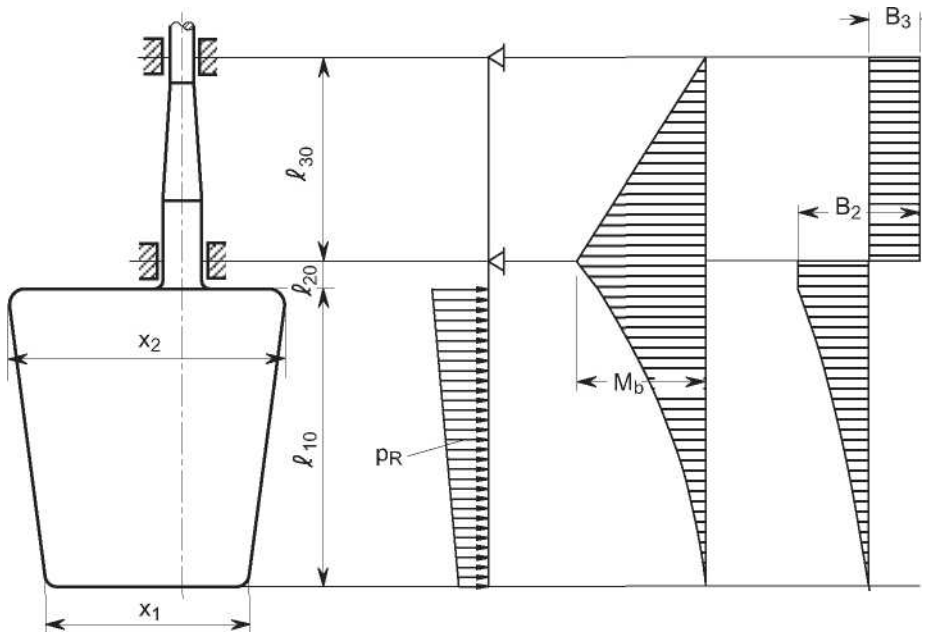

System

12.4 Spade-rudder

3.2 Data for the analysis

ℓ_{10} - ℓ_{50} = lengths of the individual girders of the system [m]

I_{10} - I_{50} = moments of inertia of these girders [cm^4]

Load on rudder body (general):

$$p_R = \frac{C_R}{\ell_{10} \cdot 10^3} \quad [\text{kN/m}]$$

Load on semi-spade rudders:

$$p_{R\,10} = \frac{C_{R\,2}}{\ell_{10} \cdot 10^3} \quad [\text{kN/m}]$$

$$p_{R\,20} = \frac{C_{R\,1}}{\ell_{20} \cdot 10^3} \quad [\text{kN/m}]$$

C_R, C_{R1}, C_{R2} see B.1 and B.2.

Z = spring constant of support in the rudder horn

$$Z = \frac{1}{f_b + f_t} \quad [\text{kN/m}]$$

fb = unit displacement of rudder horn [m] due to a unit force of 1 kN acting in the centre of support

$$f_b = 0{,}21 \frac{d^3}{I_n} \quad [\text{m/kN}]$$

(guidance value for steel)

I_n = moment of inertia of rudder horn around the x-axis at d/2 [cm^4], see also Fig. 12.3

f_t = unit displacement due to a torsional moment of the amount 1 · e [kNm]

$$f_t = \frac{d \cdot e^2}{G \cdot J_t}$$

$$f_t = \frac{d \cdot e^2 \cdot \Sigma u_i / t_i}{3{,}17 \cdot 10^8 \cdot F_T^2} \quad [\text{m/kN}]$$ for steel

G = modulus of rigidity

G = 7,92 · 10^7 kN/m^2 for steel

J_t = torsional moment of inertia [m^4]

F_T = mean sectional area of rudder horn [m^2]

u_i = breadth [mm] of the individual plates forming the mean horn sectional area

t_i = plate thickness within the individual breadth u_i [mm]

e, d = distances [m] according to Fig. 12.3

3.3 Moments and forces to be evaluated

3.3.1 The bending moment M_R and the shear force Q_1 in the rudder body, the bending moment M_b in the neck bearing and the support forces B_1, B_2, B_3 are to be evaluated, B_1 - B_3: see Fig. 12.3 and 12.4.

The so evaluated moments and forces are to be used for the stress analyses required by 2. and F.1. of this Section and for the calculation of the rudder horn, see D.

3.3.2 For spade rudders the moments and forces may be determined by the following formulae:

$$M_b = C_R \left[\ell_{20} + \frac{\ell_{10}(2x_1 + x_2)}{3(x_1 + x_2)} \right] \quad [\text{Nm}]$$

$$B_3 = \frac{M_b}{\ell_{30}} \quad [\text{N}]$$

$B_2 = C_R + B_3$ [N]

4. Rudder trunk

Where the rudder stock is arranged in a trunk in such a way that the trunk is stressed by forces due to rudder action, the scantlings of the trunk are to be as such that the equivalent stress due to bending and shear does not exceed 0,35 · Re_H of the material used.

D. Rudder Horn of Semi Spade Rudders

1. The distribution of the bending moment, shear force and torsional moment is to be determined according to the following formulae:

- bending moment: $M_b = B_1 \cdot z$ [Nm]

  $M_{bmax} = B_1 \cdot d$ [Nm]

- shear force: $Q = B_1$ [N]

- torsional moment: $M_T = B_1 \cdot e(z)$ [Nm]

For determining preliminary scantlings the flexibility of the rudder horn may be ignored and the supporting force B_1 be calculated according to the following formula:

$$B_1 = \frac{C_R \cdot b}{c} \quad [\text{N}]$$

b, c, d, e (z) and z see Fig. 12.5 and 12.6.

b = results from the position of the centre of gravity of the rudder area.

2. The section modulus of the rudder horn in transverse direction related to the horizontal x-axis is to be designed according to Section 17 for the stress range spectrum B and for 10^8 load cycles.

3. At no cross section of the rudder horn the shear stress due to the shear force Q is to exceed the value:

$$\tau = 0{,}25 \cdot \frac{R_{eH}}{\gamma_m} \quad [\text{N/mm}^2]$$

The shear stress is to be determined by following formula:

$$\tau = \frac{B_1}{A_h} \quad [\text{N/mm}^2]$$

A_h = effective shear area of rudder horn in y-direction [mm^2]

4. The equivalent stress at any location z of the rudder horn shall not exceed the following value:

$$\sigma_V = \sqrt{\sigma_b^2 + 3 \cdot \left(\tau^2 + \tau_T^2\right)} = \frac{0{,}5 \cdot R_{eH}}{\gamma_m} \quad [\text{N/mm}^2]$$

$$\sigma_b = \frac{M_b}{W_x} \quad [\text{N/mm}^2]$$

$$\tau_T = \frac{M_T \cdot 10^3}{2 \cdot A_T \cdot t_h} \quad [\text{N/mm}^2]$$

A_T = sectional area [mm^2] surrounded by the rudder horn at the location examined

t_h = thickness of the rudder horn plating [mm]

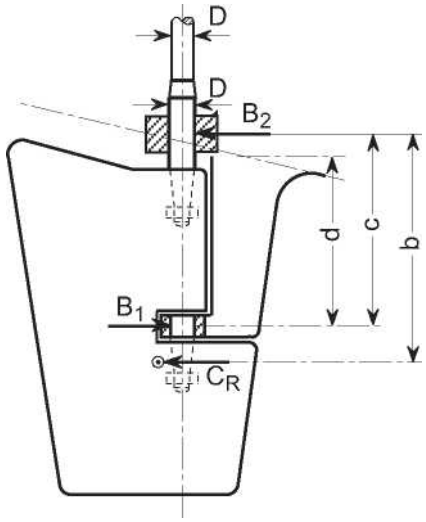

Fig. 12.5 Parameters for semi spade-rudders

5. When determining the thickness of the rudder horn plating the provisions of 2. - 4. are to be complied with. The thickness is, however, not to be less than:

$$t_{min} = 36 \cdot \sqrt{\frac{L \cdot \gamma_m}{R_{eH}}} \quad [mm]$$

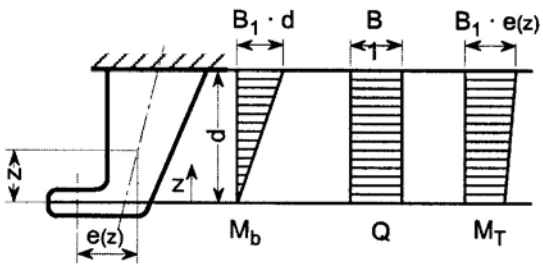

Fig. 12.6 Forces on the rudder horn

6. The rudder horn plating is to be effectively connected to the aft ship structure, e.g. by connecting the plating to longitudinal girders, in order to achieve a proper transmission of forces, see Fig. 12.7.

7. Transverse webs of the rudder horn are to be led into the hull up to the next deck in a sufficient number and must be of adequate thickness.

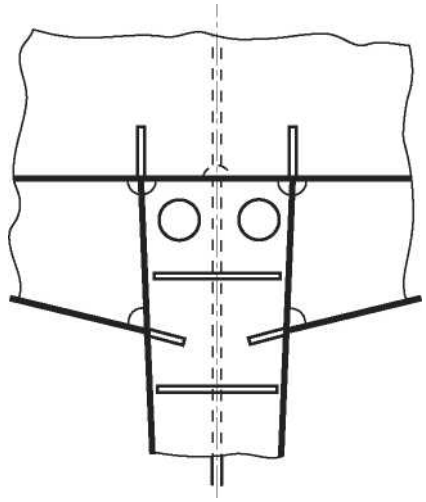

Fig. 12.7 Connection of rudder horn to the aft ship structure

8. Strengthened plate floors are to be fitted in line with the transverse webs in order to achieve a sufficient connection with the hull. The thickness of these plate floors is to be increased by 50 per cent above the Rule values as required by Section 7.

9. The centre line bulkhead (wash-bulkhead) in the afterpeak is to be connected to the rudder horn.

10. Where the transition between rudder horn and shell is curved, about 50 % of the required total section modulus of the rudder horn is to be formed by the webs in a Section A - A located in the centre of the transition zone, i.e. 0,7 r above the beginning of the transition zone, see Fig 12.8.

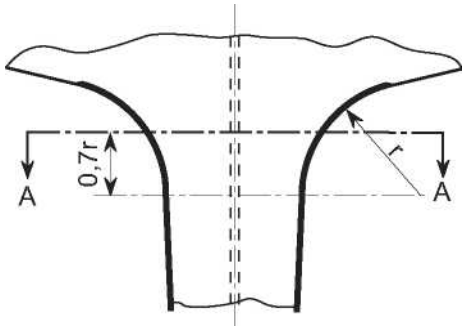

Fig. 12.8 Transition between the rudder horn and the curved shell

E. Rudder Couplings

1. General

1.1 The couplings are to be designed in such a way as to enable them to transmit the full torque of the rudder stock.

1.2 The distance of bolt axis from the edges of the flange is not to be less than 1,2 the diameter of the bolt. In horizontal couplings, at least 2 bolts are to be arranged forward of the stock axis.

1.3 The coupling bolts are to be fitted bolts. The bolts and nuts are to be effectively secured against loosening.

1.4 For spade rudders horizontal couplings according to 2. are permissible only where the required thickness of the coupling flanges t_f is less than 50 mm, otherwise cone couplings according to 3. Are to be applied. For spade rudders of the high lift type, only cone couplings according to 3. are permitted.

2. Horizontal couplings

2.1 The diameter of coupling bolts is not to be less than:

$$d_b = 0{,}62\sqrt{\frac{D^3 \cdot k_b}{k_r \cdot n \cdot e}} \quad [\text{mm}]$$

D = rudder stock diameter according to C. [mm]

n = total number of bolts, which is not to be less than 6

e = mean distance of the bolt axes from the centre of bolt system [mm]

k_r = material factor for the rudder stock as given in A.5.2

k_b = material factor for the bolts in analogues form to k_r in A.5.2.

2.2 The thickness of the coupling flanges is not to be less than determined by the following formula:

$$t_f = 0{,}62\sqrt{\frac{D^3 \cdot k_f}{k_r \cdot n \cdot e}}$$

k_f = material factor for the coupling flanges analogue to k_r in A. 5.2.

The thickness of the coupling flanges clear of the bolt holes is not to be less than 0,65 t_f.

The width of material outside the bolt holes is not to be less than 0,67 · d_b.

2.3 The coupling flanges are to be equipped with a fitted key according to DIN 6885 or equivalent standard for relieving the bolts.

The fitted key may be dispensed with if the diameter of the bolts is increased by 10 %.

2.4 Horizontal coupling flanges shall either be forged together with the rudder stock or be welded to the rudder stock as outlined in Section15, B.4.4.3.

2.5 For the connection of the coupling flanges with the rudder body see Section 15, B.4.4

3. Cone couplings

3.1 Cone couplings with key

3.1.1 Cone couplings should have a taper c on diameter of 1:8-1: 12.

$$c = \frac{d_o - d_u}{\ell} \quad \text{according Fig. 12.9}$$

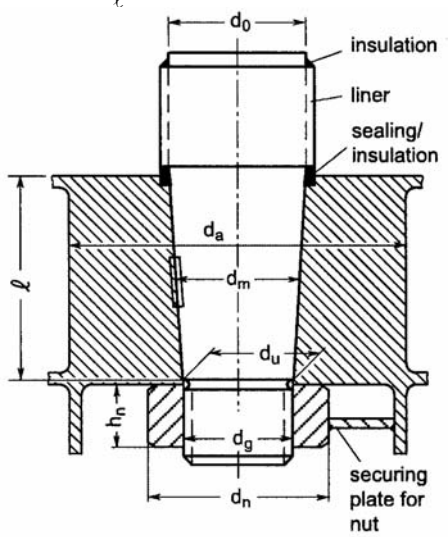

Fig: 12.9 Cone coupling

The accuracy of the cone shapes must be controlled by a colour print. The nut is to be carefully secured, e.g. by a securing plate as shown in Fig. 12.9.

3.1.2 The coupling length ℓ should, in general, not be less than 1,5 · d_0.

3.1.3 For couplings between stock and rudder a key is to be provided, the shear area of which is not to be less than:

$$a_s = \frac{16 \cdot Q_F}{d_k \cdot R_{eH1}} \quad [cm^2]$$

Q_F = design yield moment of rudder stock [Nm] according to G

dk = diameter of the conical part of the rudder stock [mm] at the key

R_{eH1} = minimum yield stress of the key material [N/mm^2]

3.1.4 The effective surface area of the key (without rounded edges) between key and rudder stock or cone coupling is not to be less than:

$$a_k = \frac{5 \cdot Q_F}{d_k \cdot R_{eH2}} \quad [cm^2]$$

R_{eH2} = minimum yield stress of the key, stock or coupling material [N/mm^2], whichever is less

3.1.5 The dimensions of the slugging nut are to be as follows:

- Height:

  $h_n = 0,6 \cdot d_g$

- Outer diameter (the greater value to be taken):

  $d_n = 1,2 \cdot d_u$ or $d_n = 1,5 \cdot d_g$

- External thread diameter:

  $d_g = 0,65 \cdot d_0$

See Fig. 12.9.

3.1.6 It is to be proved that 50 % of the design yield moment will be solely transmitted by friction in the cone couplings. This can be done by calculating the required push-up pressure and push-up length according to 3.2.3 for a torsional moment $Q'_F = 0,5 \cdot Q_F$.

3.2 Cone couplings with special arrangements for mounting and dismounting the couplings

3.2.1 Where the stock diameter exceeds 200 mm the press fit is recommended to be effected by a hydraulic pressure connection. In such cases the cone should be more slender, c ≈ 1:12 to ≈ 1:20.

3.2.2 In case of hydraulic pressure connections the nut is to be effectively secured against the rudder stock or the pintle. A securing plate for securing the nut against the rudder body is not to be provided, see Fig. 12.10.

Note:
A securing flat bar will be regarded as an effective securing device of the nut, if its shear area is not less than:

$$A_s = \frac{P_s \sqrt{3}}{R_{eH}} \quad [mm^2]$$

P_s = *shear force*

$$= \frac{P_e}{2} \cdot \mu_1 \left[\frac{d_1}{d_g} - 0,6 \right] \quad [N]$$

P_e = *push-up force according to 3.2.3.2 [N]*

μ_1 = *frictional coefficient between nut and rudder body, normally $\mu_1 = 0,3$*

d_1 = *mean diameter of the frictional area between nut and rudder body*

d_g = *thread diameter of the nut*

R_{eH} = *minimum yield stress [N/mm^2] of the securing flat bar material*

3.2.3 For the safe transmission of the torsional

moment by the coupling between rudder stock and rudder body the push-up length and the push-up pressure are to be determined by the following formulae.

3.2.3.1 Push-up pressure

The push-up pressure is not to be less than the greater of the two following values:

$$p_{rep1} = \frac{2 \cdot Q_F \cdot 10^3}{d_m^2 \cdot \ell \cdot \pi \cdot \mu_0} \quad [N/mm^2]$$

$$p_{rep2} = \frac{6 \cdot M_b \cdot 10^3}{\ell_2 \cdot d_m} \quad [N/mm^2]$$

Q_F = design yield moment of rudder stock according to G. [Nm]

d_m = mean cone diameter [mm]

ℓ = cone length [mm]

μ_o ≈ 0,15 (frictional coefficient)

M_b = bending moment in the cone coupling, e.g. in case of spade rudders [Nm]

It has to be proved that the push-up pressure does not exceed the permissible surface pressure in the cone. The permissible surface pressure is to be determined by the following formula:

$$p_{perm} = 0{,}8 \cdot R_{eH} \frac{1-\alpha^2}{\sqrt{3+\alpha^4}} \quad [N/mm^2]$$

R_{eH} = minimum yield stress [N/mm^2] of the material of the gudgeon

$\alpha = d_m/d_a$, see Fig. 12.9

The outer diameter of the gudgeon should not be less than:

$d_a = 1{,}5 \cdot d_m$ [mm]

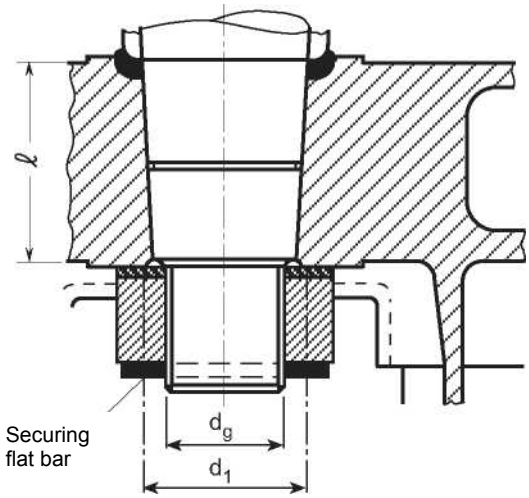

Fig. 12.10 Cone coupling with special arrangements for mounting and dismounting

3.2.3.2 Push-up length

The push-up length is not to be less than:

$$\Delta\ell_1 = \frac{p_{req} \cdot d_m}{E \frac{1-\alpha^2}{2} c} + 0{,}8 \cdot \frac{R_{tm}}{c} \quad [mm]$$

R_{tm} = mean roughness [mm]

≈ 0,01 mm

c = taper on diameter according to 3.2.1

E = modulus of elasticity

= $2{,}06 \cdot 10^5$ N/mm^2

The push-up length is, however, not to be taken greater than:

$$\Delta\ell_2 = \frac{1{,}6 \cdot R_{eH} \cdot d_m}{\sqrt{3+\alpha^4}\, E \cdot c} + 0{,}8 \cdot \frac{R_{tm}}{c} \quad [mm]$$

Note:

In case of hydraulic pressure connections the required push-up force P_e for the cone may be determined by the following formula:

$$P_e = p_{req} \cdot d_m \cdot \pi \cdot \ell \left(\frac{c}{2} + 0{,}002 \right) \quad [N]$$

The value 0,02 is a reference for the friction coefficient using oil pressure. It varies and depends on the mechanical treatment and roughness of the details to be fixed.

Where due to the fitting procedure a partial push-up effect caused by the rudder weight is given, this may be taken into account when fixing the required pushup length, subject to approval by TL.

3.2.4 The required push-up pressure for pintle bearings is to be determined by the following formula:

$$p_{rep} = 0{,}4 \frac{B_1 \cdot d_o}{d^2{}_m \cdot \ell} \quad [N/mm^2]$$

B_1 = supporting force in the pintle bearing [N], see also Fig. 12.3

d_m, ℓ = see 3.2.3

d_0 = pintle diameter [mm] according to Fig. 12.9.

F. Rudder Body, Rudder Bearings

1. Strength of rudder body

1.1 The rudder body is to be stiffened by horizontal and vertical webs in such a manner that the rudder body will be effective as a beam. The rudder should be additionally stiffened at the aft edge.

1.2 The strength of the rudder body is to be proved by direct calculation according to C.3.

1.3 For rudder bodies without cut-outs the permissible stress are limited to:

bending stress due to M_R

$$\sigma_b = 110 \ N/mm^2$$

shear stress due to Q1:

$$\tau = 50 \ Nmm^2$$

equivalent stress due to bending and shear:

$$\sigma_v = \sqrt{\sigma_b^2 + 3\tau^2} = 120 \ N/mm^2$$

M_R, Q_1 see C.3.3 and Fig. 12.3

In case of openings in the rudder plating for access to cone coupling or pintle nut the permissible stresses according to 1.4 apply. Smaller permissible stress values may be required if the corner radii are less than 0,15 · h, where h = height of opening.

1.4 In rudder bodies with cut-outs (semi-spade rudders) the following stress values are not to be exceeded:

bending stress due to M_R:

$$\sigma_b = 90 \quad N/mm^2$$

shear stress due to Q_1:

$$\tau = 50 \ N/mm^2$$

torsional stress due to M_t:

$$\tau = 50 \ N/mm^2$$

equivalent stress due to bending and shear and equivalent stress due to bending and torsion:

$$\sigma_{v1} = \sqrt{\sigma_b^2 + 3\tau^2} = 120 \, N/mm^2$$

$$\sigma_{v2} = \sqrt{\sigma_b^2 + 3\tau^2} = 100 \, N/mm^2$$

$$M_R = C_{R2} \cdot f_1 + B_1 \frac{f_2}{2} \, Nm$$

Q_1 = C_{R2} [N]

f_1,f_2 = see Fig. 12.11.

The torsional stress may be calculated in a simplified manner as follows:

$$\tau_t = \frac{M_t}{2 \cdot \ell \cdot h \cdot t} \quad [N/mm^2]$$

M_t = $C_{R2} \cdot e$ [Nm],

C_{R2} = Partial rudder force in [N] of the partial rudder area A_2 below the cross section under consideration

e = lever for torsional moment [m]

= horizontal distance between the centre of effort of area A_2 and the centre line a-a of the effective cross sectional area under consideration, see Fig. 12.11. The centre of effort is to be assumed at 0,33 · c_2 aft of the forward edge of area A_2, where c_2 = mean breadth of area A_2

h, ℓ, t = [cm], see Fig.12.11.

The distance *l* between the vertical webs should not exceed 1,2 · h.

The radii in the rudder plating are not to be less than 4-5 times the plate thickness, but in no case less than 50 mm.

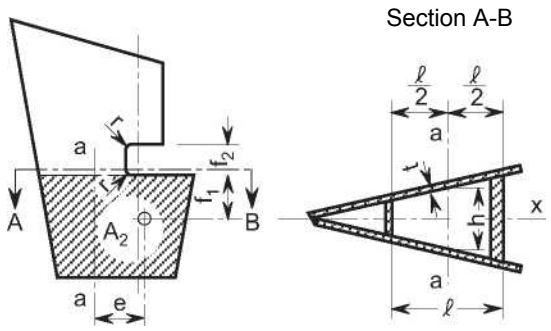

Fig. 12.11 Rudder body

Note:

It is recommended to keep the natural frequency of the fully immersed rudder and of local structural components at least 10 % above the exciting frequency of the propeller (number of revolutions x number of blades) or if relevant above higher order.

2. Rudder plating

2.1 The thickness of the rudder plating is to be determined according to Section 4, B. using the pressure p_R and t_k = 1,0 mm.

$$p_R = 10 \cdot (\mathbf{T} - z) + \mathrm{Max}\left(\frac{C_R}{10^3 \cdot A}, p_{Sdyn}\right) \quad [\mathrm{kN/m^2}]$$

p_{Sdyn} = dynamic pressure from external sea loads [kN/m^2] according to Section 5, C.1.1.

The thickness shall, however, not be less than the thickness of the shell plating at the end according to Section 7, B.2.

Regarding welding see Section 15, B.

2.2 For connecting the side plating of the rudder to the webs tenon welding is not to be used. Where application of fillet welding is not practicable, the side plating is to be connected by means of slot welding to flat bars which are welded to the webs.

2.3 The thickness of the webs is not to be less than 70 % of the thickness of the rudder plating according to 2.1.

3. Transmitting of the rudder torque

3.1 For transmitting the rudder torque, the rudder plating according to 2.1 is to be increased by 25 % in way of the coupling. A sufficient number of vertical webs is to be fitted in way of the coupling.

3.2 If the torque is transmitted by a prolonged shaft extended into the rudder, the latter must have the diameter D_t or D_1, whichever is greater, at the upper 10 % of the intersection length. Downwards it may be tapered to 0,6 D_t, in spade rudders to 0,4 times the strengthened diameter, if sufficient support is provided for.

4. Rudder bearings

4.1 In way of bearings liners and bushes are to be fitted. Their minimum thickness is:

t_{min} = 8 mm for metallic and synthetic-materials

t_{min} = 22 mm for lignum materials

4.2 An adequate lubrication is to be provided.

4.3 The bearing forces result from the direct calculation mentioned in C.3. As a first approximation

the bearing force may be determined without taking account of the elastic supports. This can be done as follows:

- Normal rudder with two supports:

  The rudder force C_R is to be distributed to the supports according to their vertical distances from the centre of gravity of the rudder area.

- Semi-spade rudders:

- Support force in the rudder horn:

$$B_1 = C_R \cdot \frac{b}{c} \quad [N]$$

- Support force in the neck bearing:

$$B_2 = C_R - B_1 \quad [N]$$

For b and c see Fig. 12.5.

4.4 The projected bearing surface A_b (bearing height x external diameter of liner) is not to be less than

$$A_b = \frac{B}{q} \quad [mm^2]$$

B = support force [N]

q = permissible surface pressure according to Table 12.2

4.5 Stainless and wear resistant steels, bronce and hot-pressed bronce-graphit materials have a considerable difference in potential to non-alloyed steel Respective preventive measures are required.

4.6 The bearing height shall be equal to the bearing diameter, however, is not to exceed 1,2 times the bearing diameter. Where the bearing height is less than the bearing diameter, higher specific surface pressures may be allowed.

5. Pintles

5.1 Pintles are to have scantlings complying with the conditions given in 4.4 and 4.6. The pintle diameter is not to be less than:

$$d = 0{,}35 \cdot \sqrt{B_1 \cdot k_r} \quad [mm]$$

B_1 = support force [N]

k_r = see A.5.2.

Table 12.2 Permissible surface pressure for different bearing materials

Bearing material	Surface pressure q [N/mm²]
Lignum vitae	2,5
White metal, oil lubricated	4,5
Synthetic material **(1)**	5,5
Steel **(2)**, bronze and hot-pressed bronze-graphit materials	7,0

(1) *Synthetic materials to be of approved type. Surface pressures exceeding 5,5 N/mm² may be accepted in accordance with bearing manufacturer's specification and tests, but not more than 10 N/mm².*

(2) *Stainless and wear resistant steel in an approved combination with stock liner. Higher surface pressures than 7 N/mm² may be accepted if verified by tests.*

5.2 The thickness of any liner or bush shall not be less than:

$$t = 0{,}01 \cdot \sqrt{B_1} \quad [mm]$$

or the values in 4.1 respectively.

5.3 Where pintles are of conical shape, they are to comply with the following

taper on diameter 1 : 8 to 1 : 12
if keyed by slugging nut

taper on diameter 1 : 12 to 1 : 20
if mounted with oil injection and hydraulic nut

5.4 The pintles are to be arranged in such a manner as to prevent unintentional loosening and falling out.

For nuts and threads the requirements of E.3.1.5 and E.3.2.2 apply accordingly.

6. Guidance values for bearing clearances

6.1 For metallic bearing material the bearing clearance should generally not be less than:

$$\frac{d_b}{1000}+1{,}0 \ \ [\mathrm{mm}]$$

d_b = inner diameter of bush

6.2 If non-metallic bearing material is applied, the bearing clearance is to be specially determined considering the material's swelling and thermal expansion properties.

6.3 The clearance is not to be taken less than 1,5 mm on diameter. In case of self lubricating bushes, going down below this value can be agreed to on the basis of the manufacturer's specification.

G. Design Yield Moment of Rudder Stock

The design yield moment of the rudder stock is to be determined by the following formula:

$$Q_F = 0{,}02664 \ \frac{D_t^3}{k_r} \ \ [\mathrm{Nm}]$$

D_t = stock diameter [mm] according to C.1.

k_r = see A.5.2.

Where the actual diameter D_{ta} is greater than the calculated diameter D_t, the diameter D_{ta} is to be used. However, D_{ta} need not be taken greater than $1{,}145 \cdot D_t$.

H. Stopper, Locking Device

1. Stopper

The motions of quadrants or tillers are to be limited on either side by stoppers. The stoppers and their foundations connected to the ship's hull are to be of strong construction so that the yield point of the applied materials is not exceeded at the design yield moment of the rudder stock.

2. Locking device

Each steering gear is to be provided with a locking device in order to keep the rudder fixed at any position. This device, as well as the foundation in the ship's hull are to be of strong construction so that the yield point of the applied materials is not exceeded at the design yield moment of the rudder stock as specified in G. Where the ship's speed exceeds 12 kn, the design yield moment need only be calculated for a stock diameter based on a speed v_0 = 12 kn.

3. Regarding stopper and locking device see also Chapter 107 - Ship Operation Installations and Auxiliary Systems, Section 2, A.3.6 and A.3.7.

I. Fin Stabilizers

1. General

The hydrodynamic effects of fin stabilizers on the rolling behaviour of the ship are not part of the classification procedure. The classification however includes the integration of the system into the hull structure.

For the mechanical part of the drive system see Chapter 107 - Ship Operation Installations and Auxiliary Systems, Section 2, B, for the hydraulic system see Chapter 4, Section 14, G.

2. Integration into the ship's structure

2.1 The complete bearing system and the drive unit directly mounted at the fin stock are to be situated within an own watertight compartment at the ship's side or bottom. For installation purposes, inspection and maintenance watertight closable openings (with safeguards that they can be opened only during docking) have to be provided in suitable number and size.

For retractable fins a recess of sufficient size to harbour the complete fin has to be provided in addition at the ship's shell.

2.2 At the penetration of the fin stock and at the slot of retractable fins, the shell has to be strengthened in a sufficient way.

2.3 The watertight boundaries of the fin recess, if applicable, and of the drive compartment have to be dimensioned according to Section 7. Special attention has to be given to the transmission of the fin support forces from the stock bearings into the ship's structure. The local reinforcements and the overall transmission of the forces by girders, web frames, etc. have to be defined by direct calculations considering fatigue strength and have to be included in the hull drawings submitted.

2.4 If the fin body extends over the maximum breadth of the ship, the location of non-retractable fins should be marked on the shell.

SECTION 13

STRENGTHENING FOR NAVIGATION IN ICE

A. General

1. Ice Class Notation B

1.1 The hull structure of naval ships for navigation in drift ice in the mouth of rivers and in coastal regions may be strengthened. If the requirements of this Section are met, the Notation **B** will be assigned, see also Chapter 101 - Classifications and Surveys (Naval Ship Technology), Section 2, C.

1.2 Measures for other conditions of navigation in ice

If ice class notations other than **B** are required by the Naval Authority, the TL Rules Chapter 1 - Hull Structures, Section 15 may be used.

2. Ice class draught

2.1 The maximum ice class draught amidships is the design draught in fresh water.

2.2 The maximum and minimum ice class draughts at the forward perpendicular and at the aft end of the length **L** are to be stated in the drawings submitted for approval. Those draughts will be stated in the annex to the Class Certificate.

2.3 The line defined by the maximum draughts at the forward perpendicular, amidships and at the aft (may be a broken line) will in the context of this Section be referred to as **LWL.** The line defined by the minimum draughts fore and aft will be referred to as **BWL,** see Fig. 13.1.

The draught and trim, limited by the **LWL,** must not be exceeded when the ship is navigating in ice. The salinity of the sea water along the intended route shall be taken into account when the ship is loaded.

2.4 The ship is always to be loaded down at least to the **BWL** when navigating in ice. The **BWL** is to be agreed upon with the Naval Authority. In determining the **BWL,** regard is to be paid to the need for ensuring a reasonable degree of ice going capability in low load conditions. The propeller shall be fully submerged, if possible entirely below the ice.

3. Definitions

3.1 Ice belt

3.1.1 The ice belt is the zone of the shell plating which is to be strengthened.

For the ice class notation **B** ice belt consists of the region **F**. It is defined as the area from the stem to a line parallel to and at the distance c = 0,02 **L** aft of the borderline between the parallel midship region and the fore ship, see Fig. 13.1. Vertically, the ice belt extends from 0,4 m above LWL to 0,5 m below BWL.

3.1.2 On the shell expansion plan to be submitted for approval the location of the **LWL** and the **BWL** as well as the ice belt are to be indicated. The region **F** has to be marked.

3.2 Definition of parameters

The following terms are used in the formulae in this Section:

a = frame spacing, longitudinal or transverse [m], taking into account the intermediate frames, if fitted

R_{eH} = minimum yield stress for hull structural steel according to Section 3, B.

ℓ = unsupported span [m] of frames, web frames, stringers, see also Section 4, C.3.

p = design ice pressure [N/mm^2] according to B.1.1.

γ_m = partial safety factor for structural resistance, see Section 4, Table 4.1

Note:

The frame spacings and spans defined in the text are normally assumed to be measured in a vertical plane parallel to the centreline of the ship. However, if the ship's side deviates more than 20° from this plane, the frame distances and spans shall be measured along the side of the ship.

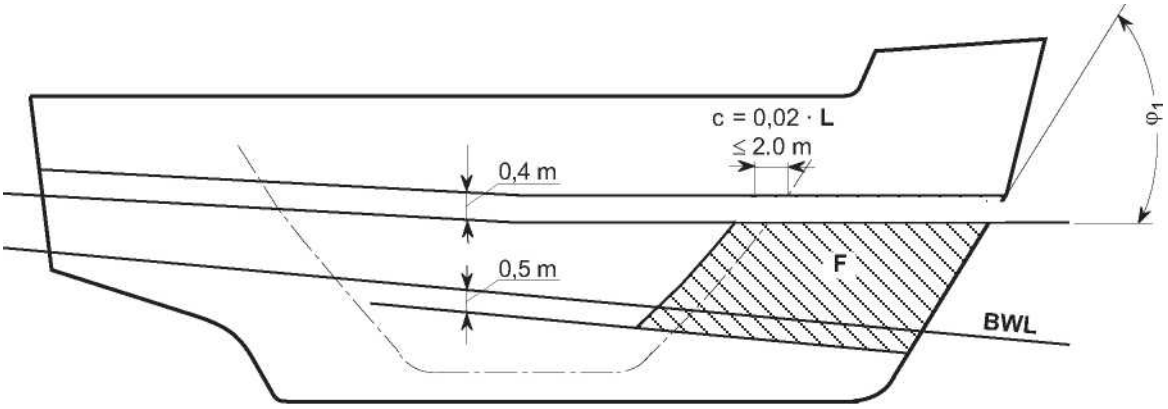

Fig. 13.1 Region F of the ice belt

B. Requirements for the Notation B

1. General

1.1 The formulae for determining the scantlings used in this Section are based on the following design load:

$$p = \left(\frac{0,28}{10000} \cdot \sqrt{D} + 0,008\right) \cdot c_a \cdot p_0 \quad \left[N/mm^2\right]$$

D = displacement of the ship [t] on the maximum ice class draught according to A. 2.

c_a = 9,4 - ℓ_a

ℓ_a = effective length [m] according to Table 13.1

The max. value for c_a is 9 and the minimum value 5.

p_0 = nominal ice pressure [N/mm^2]

= 5,6

1.2 The formulae given in this Section may be substituted by direct calculation methods, subject to approval by TL.

2. Thickness of shell plating in the ice belt

2.1 General

Within the ice belt the shell plating must have a strengthened strake extending over the forward region F the thickness of which is defined in the following.

The midship thickness of the side shell plating is to be maintained forward of amidships up to the strengthened plating.

2.2 The thickness of the shell plating is to be determined according to the following formulae:

Table 13.1 Effective length ℓ_a of structural elements for design ice pressure

Structure	Type of framing	ℓ_a
Shell	Transverse	Frame spacing
	Longitudinal	2 x frame spacing
Frames	Transverse	Frame spacing
	Longitudinal	Span of frame
Ice stringer	-	Span of stringer
Web frame	-	2 x web frame spacing

$$t = 550 \cdot \mathbf{a} \cdot \sqrt{\frac{f_1 \cdot p \cdot \gamma_m}{R_{eH}}} + t_K \quad [mm]$$

- transverse framing:

$$f_1 = 1{,}3 - \frac{1}{\left(0{,}88 + \frac{0{,}11}{\mathbf{a}}\right)^2}$$

f_{1max} = 1,0

- longitudinal framing:

$$f_1 = \frac{1}{f_2}$$

$$f_2 = 0{,}6 + 1{,}82 \cdot \mathbf{a} \quad \text{for} \quad \mathbf{a} \geq 0{,}22$$

$$f_2 = 1{,}4 - \frac{0{,}09}{\mathbf{a}} \quad \text{for} \quad 0{,}125 \leq \mathbf{a} < 0{,}22$$

t_K = corrosion addition as defined in Section 4, F.6.

2.3 Where the draught is smaller than 1,0 m, or where the distance between the lower edge of the ice belt and the keel plate is smaller than 1,0 m, the thickness of the bottom plating in way of the ice belt region F is not to be less than required for the ice belt.

2.4 Side scuttles are not to be situated in the ice

3. Frames, ice stringers, web frames

3.1 General

3.1.1 The extension of the ice strengthened framing reaches longitudinally from stem to 0,075 **L** abaft and vertically from b_E = 1,0 m below **BWL** to 1,0 m above **LWL**

Where the vertical extension b_E would extend beyond a deck or a tank top by not more than 250 mm, it may be terminated at that deck or tank top.

3.1.2 Within the ice strengthened area all frames are to be effectively attached to the supporting structure.

3.2 Transverse frames

3.2.1 The section modulus of a main, 'tweendeck or intermediate transverse frame is to be determined according to the following formula:

$$W = 2500 \cdot (7 \cdot \ell - 1{,}1) \cdot p \cdot \mathbf{a} \cdot \frac{\gamma_m}{R_{eH}} \quad [cm^3]$$

The load centre of the ice load is taken at $\ell/2$

Where less than 15 % of the span ℓ of the frame is situated within the ice strengthening zone for frames as defined in 3.1.1, ordinary frame scantlings may be used.

3.2.2 Upper end of transverse framing

3.2.2.1 The upper end of the ice strengthened part of all frames is to be attached to a deck or an ice stringer.

3.2.2.2 Where a frame terminates above a deck or stringer which is situated at or above the upper limit or the ice belt, see A.3.1.1, the part above the deck or stringer need not be ice strengthened. Intermediate frames are to be connected to the adjacent main and 'tweendeck frames by a horizontal member of the same scantlings as the main and 'tweendeck frames Such an intermediate frame may also be extended to the deck above.

3.2.3 Lower end of transverse framing

3.2.3.1 The lower end of the ice strengthened part of all frames is to be attached to a deck, inner bottom, tank top or ice stringer.

3.2.3.2 Where an intermediate frame terminates below a deck, tank top or ice stringer which is situated at or below the lower limit of the ice belt, see A.3.1.1. The lower end is to be connected to the adjacent main 'tweendeck frames by a horizontal member of the same scantlings as the frames.

3.3 Longitudinal frames

The section modulus and the shear area of the longitudinal frames are to be determined according to the following formulae:

- section modulus:

$$W = 10^3 \cdot \left(4{,}5 - \frac{0{,}2}{\mathbf{a}}\right) \cdot p \cdot \ell^2 \cdot \frac{\gamma_m}{R_{eH}} \quad [cm^3]$$

- shear area:

$$A = 0{,}19 \cdot 10^3 \cdot \left(4{,}5 - \frac{0{,}2}{\mathbf{a}}\right) \cdot p \cdot \ell \cdot \frac{\gamma_m}{R_{eH}} \quad [cm^2]$$

4. Stem

The thickness of welded plate stems up to 600 mm above **LWL** is to be 1,1 times the thickness required according to Section 11, B.1., however not exceeding 25 mm. The thickness above the point 600 mm above the **LWL** may be gradually reduced to the thickness required according to Section 11, B.1.

SECTION 14

FOUNDATIONS, HATCHWAYS AND HATCHCOVERS

A. General

1. Scope

This Section covers only the standard forms of foundations, hatchways and hatch covers, having a wide spread application in naval ships. Exceptional types and forms will be especially considered.

2. Definitions

Position for the arrangements of hatches, doors, manholes:

Pos. 1 on exposed freeboard decks

on exposed superstructure decks within the forward quarter of **L**

Pos. 2 on exposed superstructure decks aft of the forward quarter of **L**

R_{eH} = minimum yield stress [N/mm^2] of the steel used according to Section 3

R_m = tensile strength of the material used [N/mm^2] according to Section 3, Table 3.1 for steel and Tables 3.5 and 3.6 for aluminium

t_K = corrosion addition according to Section 4, F.

B. Foundations

1. General

1.1 Application

Foundations for all types of equipment on board of naval ships are fulfilling the following tasks:

- Transmission of static/dynamic forces and moments created by the equipment itself as well as created by ship motions to the hull structure
- Reduction of transmission of dynamic peak loads and vibrations to the ship's structure
- Reduction of structure-borne noise transmitted from the machinery mounted on the foundation
- Reduction of shock forces created by underwater explosions and acting on the equipment

1.2 Methods of analysis and design principles

1.2.1 Methods of analysis

1.2.1.1 Foundations have to be analyzed together with their structural integration. In general a static structural analysis of the foundations may be sufficient. In special cases, however, a dynamic analysis may be required. Regarding groups of similar foundations and substructures it is sufficient to examine one representative unit.

1.2.1.2 It has to be verified that the foundation has the stiffness required in the equipment specification and that the deflections are within the permissible range.

1.2.1.3 It has to be proven that the natural frequencies of the foundation are not within the range of the critical excitation frequencies of the equipment mounted on the foundation. The judgment of the result of the analysis shall consider the requirements of Section 4, K.

1.2.2 Design details

Foundations fitted on decks and walls in highly stressed areas of the hull girder have to be designed with respect to sufficient fatigue strength.

1.3 Considerations for shock strength

1.3.1 Shock loads

The shock loads have to be determined for the foundations of equipment with at least shock safety classes A and B, see Section 16, D.

1.3.2 Intermediate foundations

1.3.2.1 To reduce the influence of shock loads as well as to avoid the transmission of structure-borne noise between equipment and the ship's structure intermediate foundation framing is recommendable. For the requirements on the mounting of such double elastic foundations, see Section 16.

1.3.2.2 The natural frequencies of the bearings of the framing have to be coordinated with the manufacturer of the equipment mounted on the framing.

1.3.3 Screw connections

Screws are to be designed according to proven and acknowledged principles, see also Chapter 104 - Propulsion Plants, Section 2, B.4.

2. Foundations for main propulsion engines

2.1 General

2.1.1 The following requirements apply to foundations of diesel engines, gears, gas turbines and generators.

2.1.2 The rigidity of the engine seating and the surrounding bottom structure must be adequate to keep the deformations of the system within the permissible limits. In special cases, proof of deformations and stresses may be required.

2.2 Direct calculation

For a direct calculation of motor seatings the following is to be observed.

For seatings of elastically mounted medium speed four-stroke diesel engines the total deformation Δf shall be not greater than:

$\Delta f = f_u + f_o \leq 0{,}2 \cdot \ell_M$ [mm]

ℓ_M = length of motor [m]

f_u = maximum vertical deformation of the seating downwards within the length ℓ_M

f_o = maximum vertical deformation of the seating upwards within the length ℓ_M [mm]

The individual deformations f_u and f_o shall not be greater than:

$$F_{u\,max},\ f_{o\,max} = 0{,}7 \cdot \Delta f$$

For the calculation of the deformations the maximum static and wave induced internal and external differential loads due to local loads and the longitudinal hull girder bending moments as well as the rigidity of the motor are to be considered.

For seatings of non-elastically mounted medium speed four-stroke diesel engines the deformation values shall not exceed 50 % of the defined values.

2.3 Due regard is to be paid to a smooth flow of forces in transverse and longitudinal direction.

2.4 The foundation bolts for fastening the engine at the seating shall be spaced no more than 3 · d apart from the longitudinal foundation girder. Where the distance of the foundation bolts from the longitudinal foundation girder is greater, proof of equivalence is to be provided.

d = diameter of the foundation bolts

2.5 In the whole speed range of main propulsion installations for continuous service resonance vibrations with inadmissible vibration amplitudes must not occur; if necessary structural modifications have to be provided for avoiding resonance frequencies. Otherwise, a barred speed range has to be fixed. Within a range of -10 % to +5 % related to the rated speed no barred speed range is permitted. TL may require a

vibration analysis and, if deemed necessary, vibration measurement.

2.6 Longitudinal girders

2.6.1 The thickness of the longitudinal girders above the inner bottom for 4-stroke internal combustion engines is not to be less than:

$$t = \left[\frac{P}{n \cdot e_1 \cdot c} + \frac{G}{280}\right] \cdot \frac{3{,}75}{\ell_m} \quad [mm]$$

$$c = 1 - \frac{1}{0{,}025\sqrt{P}} \quad 0{,}2 \le c \le 0{,}5$$

t_{min} = $0{,}4 \cdot t_p$ [mm]

t_p = thickness of top plate, see 2.6.4

P = rated driving power of the engine [kW]

n = rated speed at output [1/min]

G = weight of engine [kN]

ℓ_m = bolted length of engine on foundation [m]

e_1 = distance of the longitudinal girders [m]

The web thickness of longitudinal girders for elastically mounted four-stroke internal combustion engines may be reduced to

t‘ = 0,4 · t

if brackets are provided below the mountings, besides each bolt. The web thickness may be reduced to

t‘ = 0,9 · t

if two longitudinal girders are provided at each side of an internal combustion engine.

2.6.2 The thickness of the longitudinal girders above the inner bottom or deck for gears or generators is not to be less than:

$$t = \frac{P}{n \cdot e_1 \cdot \left(\ell_m + \frac{e_1}{3}\right)} \quad [mm]$$

P = rated output of gear or generator [kW]

e_1, n, ℓ_m = see 2.6.1

2.6.3 For the thickness of the longitudinal girders for gas turbines above the inner bottom, the manufacturer's requirements have to be considered additionally.

2.6.4 The sizes of the top plate (width and thickness) shall be sufficient to attain efficient attachment and seating of the engine and - depending on seating height and type of engine - adequate transverse rigidity.

The thickness of the top plate shall be:

t_p = 0,9 · d [mm]

d = diameter of the foundation bolts [mm]

The cross sectional area of the top plate is not to be less than:

A_T = P/15 + 30 [cm^2] for P ≤ 750 kW

= P/75 + 70 [cm^2] for P > 750 kW P

= see 2.6.1

Where twin engines are fitted, a continuous top plate is to be arranged in general if the engines are coupled to one propeller shaft.

2.6.5 Top plates are preferably to be connected to longitudinal and transverse girders thicker than approx. 15 mm by means of a double beveling butt joint (K butt joint), see also Section 15.

2.7 Transverse support of longitudinal girders

2.7.1 The sectional modulus and the cross sectional area of the floor plates between longitudinal girders are not to be less than:

$$W = \left(\frac{120 \cdot P}{n} + e_1 \cdot G\right) \cdot \frac{7 \cdot a}{\ell_m} \quad [cm^3]$$

$$A_S = \frac{0{,}35 \cdot a \cdot G}{\ell_m} \quad [cm^2]$$

a = distance of the floor plates [m]

For all other parameters see 2.6.1.

2.7.2 The longitudinal girders of the engine seating are to be supported transversely by means of web frames or wing bulkheads. The scantlings of web frames are to be determined according to Section 7.

3. Foundations for auxiliary engines

For mechanical and electrical installations the loads on the foundations are created by their weight, and all reaction forces and moments resulting from the most unfavorable operating conditions have to be considered in addition

4. Foundations for deck machinery and mooring equipment

4.1 For deck machinery, like anchor windlasses, mooring winches, boat davits, etc. the most critical operation status has to be considered for an analysis.

4.2 For the supporting structure under windlasses and chain stoppers, the following permissible stresses are to be observed:

bending stress : $\sigma_b = \frac{200}{k}$ [N/mm^2]

shear stress : $\tau = \frac{120}{k}$ [N/mm^2]

equivalent stress : $\sigma_V = \sqrt{\sigma_b^2 + 3\tau^2} = \frac{220}{k}$ [N/mm^2]

The acting forces are to be calculated for 80 % and 45 % respectively of the rated breaking load of the chain cable, i.e.:

for chain stoppers	80 %
for windlasses	80 %, where chain stoppers are not fitted.
	45 %, where chain stoppers are fitted.

4.3 See also Chapter 107 - Ship Operation Installations and Auxiliary Systems, Section 5, A. and the TL Rules Chapter 2 - Materials, Section 11-Equipment, Table 11.8.

5. Foundations for weapons and sensors

5.1 Types of foundations

Naval ships may be equipped with standardized functional units, especially for weapons, sensors and electronic equipment. Containers with an upper deck flange hanging downwards from the main or super-structure decks, as well as containers and pallets standing on lower decks of the ship's structure may be used.

5.2 Weapon containers

Weapon modules normally consist of a module cover connected to a surrounding stiff foundation and the containers below, hanging through the deck. The containerised room below has to have adequate strength to carry all supporting systems for this weapon, like computer, ammunition feeding, air conditioner, energy distribution, etc.

The containers are to be bedded onto the upper flange of the respective hatchway considering the exact alignment to the ship's axes. A plastic resin compound, which shall be of the quick hardening, high loadability, heat-resistant type, should be used to transfer static and dynamic loads evenly into the ship's structure. The fastening of the module cover to the flange of the hatch coaming shall be provided by high-strength, pre-stressed screw connections, which are to be locked properly. The detailed design of the flanges on the coaming as well on the cover has to consider the shock aspects defined in 1.3.

5.3 Units for electronic equipment

Electronic units normally consist of containers or of pallets for bigger floor areas. Both types of units are to be fitted on intermediate foundations which are shock mounted. Thus the need of shock mounting of all single parts of the equipment can be avoided to a considerable extent. The lower flange of the intermediate foundation shall be connected to the deck structure by screw connections properly locked.

C. Hatchways

1. Application

Hatchways for the following purposes on board of naval ships are considered in this Section:

- Loading and unloading of military equipment
- Installation and removal of equipment for repair and maintenance
- Change of equipment for modernization
- Openings for engine rooms and miscellaneous duties

2. Hatchways on freeboard and super-structure decks

2.1 In general hatchways are to have coamings with a minimum height above the deck as follows:

- In position 1: 600 mm
- In position 2: 450 mm

2.2 Hatchways on exposed decks which are closed by weathertight, self-tightening steel covers as per D., may have lower coamings or may also be constructed without coamings.

3. Hatchways on lower decks and within superstructures

3.1 Coamings are not required for hatchways below the freeboard deck or within weathertight closed superstructures unless they are required for strength purposes.

3.2 Where within hatch casings no hatch covers are arranged at the deck level, covers and their supports below are to be strengthened corresponding to the greater load.

4. Hatchway

4.1 Hatchway coamings which are exposed to the wash of sea shall comply analogously with the requirements for walls of deckhouses as per Sections 8 and 9. They are to be adequately supported and stiffened.

4.2 Coamings with 600 mm or more in height are to be stiffened in their upper part above deck or in their lower part below deck by a horizontal stiffener.

Flush deck hatches have to be specially considered case by case.

Table 14.1 Hatchcover design references

Structural elements	Design according to	Loads according to Section 5, if applicable	Remarks
Exposed to weather:			
Plating	Section 4, B.3.	$p_{Sdyn} \rightarrow$ C.1. $p_e \rightarrow$ C.2. $p_L \rightarrow$ F.	See 2.
Stiffeners	Section 4, Table 4.3		
Girders	Section 4, D.		
Internal:			
Plating	Section 4, B.3.	$p_L \rightarrow$ F. $p_{WT} \rightarrow$ D.1. $p_{NWT} \rightarrow$ D.2.	See 2.
Stiffeners	Section 4, Table 4.3.		
Girders	Section 4, D.		

4.3 The connection of the coamings to the deck at the hatchway corners is to be carried out with special care.

For rounding of hatchway corners, see also Section 4, J.3.

D. Hatch Covers

1. Design references

1.1 Application

It is assumed that on board of naval ships all hatch covers are made of metal (steel or aluminium) having integrated girder elements in form of box girders or, alternatively, that the hatch covers are of the pontoon type, etc.

1.2 For design references see Table 14.1.

2. Design assumptions

2.1 The loads have to be applied as for decks at the same height z above base line. The breadth of the hatchway b' has to be considered by applying the coefficient n_2, see Section 5, C.1.

2.2 The hatch cover stiffeners/girders have to be regarded as simply supported at both ends.

2.3 Hatch covers are to be designed on the basis of direct calculations. In general the requirements of Section 4 regarding strength are to be applied.

Where hatch covers are made of aluminium alloys, Section 3, D. is to be observed. A permissible deflection of f = 0,0028 ℓ applies.

2.4 Structural elements of hatch covers are to be examined for sufficient buckling strength according to Section 4, H.

2.5 Proof of fatigue strength according to Section 17 may be required for hatch cover supports.

3. Locking and securing of hatchway covers

3.1 For the design of the securing devices against shifting according to 3.5 the mass forces in the ship's longitudinal and transverse direction are to be calculated. For this purpose the following acceleration components are to be used:

0,2 · g [m/s^2] in longitudinal direction

0,5 · g [m/s^2] in transverse direction

3.2 The hatch covers are to be locked to the hatch coamings. The net cross-sectional area of the securing devices is not to be less than:

$$A = 1{,}4 \cdot s \cdot \left(\frac{235}{R_{eH}}\right)^{e} \quad [cm^2]$$

s = spacing between securing devices [m], not to be taken less than 2 m

γ_m = partial safety factor for structural resistance, see Section 4, Table 4.1

R_{eH} = not to be taken greater than 0,70 Section 3

e = 0,75 for R_{eH}>235N/mm^2

e = 1,00 for $R_{eH} \leq 235$ N/mm^2

Rods or bolts are to have a net diameter not less than 19 mm for hatchways exceeding 5 m^2 in area. The spacing of securing devices shall generally not exceed 6 m. Due attention is to be given to the stiffness of hatch cover edges between the securing devices.

3.3 Between cover and coaming and at cross joints a packing line pressure sufficient to obtain weathertightness is to be maintained by the securing devices. For packing line pressures exceeding 5 N/mm, the cross-sectional area is to be increased indirect proportion. The packing line pressure is to be specified.

3.4 The cover edge stiffness is to be sufficient to maintain adequate sealing pressure between securing devices. The moment of inertia of edge elements is not to be less than:

I = $6 \cdot p \cdot s^4$ [cm^4]

p = packing line pressure [N/mm], minimum 5 N/mm

s = spacing [m] of securing devices

3.5 Securing devices are to be of reliable construction and effectively attached to the hatchway coamings, decks or covers. Individual securing devices on each cover are to have approximately the same stiffness characteristics.

3.6 Where rod cleats are fitted, resilient washers or cushions are to be incorporated.

3.7 Where hydraulic cleating is adopted, a positive means is to be provided to ensure that it remains mechanically locked in the closed position in the event of failure of the hydraulic system.

3.8 The scantlings of the securing devices are to be such as to prevent lifting and shifting of the hatch covers.

3.9 Hatch covers, which are intended to carry cargo, are to be additionally secured against shifting in the longitudinal and transverse direction due to the horizontal mass forces specified in 3.1.

3.10 Closing appliances are to be provided at each
corner of the hatch cover. This applies also to hatch covers consisting of several parts.

3.11 The packing material is to be suitable for all expected service conditions of the ship and is to be compatible with the military cargoes to be transported. The packing material is to be selected with regard to dimensions and elasticity in such a way that probable deformations can be carried. Forces are to be carried by the steel structure only.

The packing is to be compressed so as to give the necessary tightness effect.

Special consideration shall be given to the packing arrangement in ships with large relative movements between hatch covers and coamings or between hatch cover sections.

3.12 At cross-joints of multi-panel covers vertical guides (male/female) are to be fitted to prevent excessive relative vertical deflections between loaded/ unloaded panels.

3.13 To prevent damage to hatch covers and ship structure, the location of stoppers is to be compatible with the relative movements between hatch covers and ship structure. The number should be as small as practically possible.

3.14 For hydraulic equipment to close and open hatch covers see Chapter 107 - Ship Operation Installations and Auxiliary Systems, Section 14, B.

4. Tightness test, trials

4.1 The self-tightening steel hatch covers on weather decks and within open superstructures are to be hose tested.

The water pressure shall not be less than 2 bar and the hose nozzle shall be held at a distance of not more than 1,5 m from the hatch cover to be tested (the nozzle diameter shall not be less than 12 mm). During frost periods equivalent tightness tests may be carried out to the satisfaction of the TL Surveyor.

4.2 Upon completion of the hatchway cover system trials for proper functioning are to be carried out in presence of the TL Surveyor.

E. Engine Room Hatchways

1. Deck openings

1.1 The openings above engine rooms shall not be larger than necessary. In way of these rooms sufficient transverse strength is to be ensured.

1.2 Engine room openings are to be well rounded at their corners, and if required, to be provided with strengthening, unless proper distribution of the longitudinal stresses is ensured by the side walls of super structures or deckhouses. See also Section 4, J.3.

2. Engine room casings

2.1 Engine room openings on weather decks and inside open superstructures are to be protected by casings of sufficient height.

2.2 The scantlings of stiffeners, plating and covering of exposed casings are to comply with the requirements for longitudinal and transverse walls according to Sections 8 and 9.

2.3 Inside open superstructures the casings are to have stiffeners and plates as required for an aft end bulkhead according to Section 9, C.

2.4 The coaming plates are to be extended to the lower edge of the deck beams.

3. Doors in engine and boiler room casings

3.1 The doors in casings on exposed decks and within open superstructures are to be of steel, well stiffened and hinged, and capable of being closed from both sides and secured weathertight by toggles and rubber sealings.

3.2 The doors are to be at least of the same strength as the casing walls in which they are fitted.

3.3 The height of the doorway sills is to be 600 mm above decks in pos. 1 and 380 mm above decks in pos. 2.

F. Miscellaneous Openings in Freeboard and Superstructure Decks

1. Manholes and small flush deck hatches in decks in pos. 1 and 2 or in open superstructures are to be closed watertight.

2. If not bolted watertight, they are to be of substantial steel construction with bayonet joints or screws. The covers are to be hinged or to be permanently attached to the deck by a chain.

3. Openings in freeboard decks other than hatchways and machinery space openings may only be arranged in weathertight closed superstructures or deckhouses or in weathertight closed companionways of the same strength.

4. Companionways on exposed parts of freeboard decks, on decks of closed superstructures and in special cases on the deck of deckhouses are to be of solid construction. The height of the doorway sills is to be 600 mm above decks in pos. 1 and 380 mm above decks in pos. 2.

5. The doors of the companion ways are to be capable of being operated and secured from both sides. They are to be closed weathertight by rubber sealings and toggles.

6. Access hatchways shall have a clear width of at least 600 x 600 mm.

SECTION 15

WELDED JOINTS

A. General

1. The content of this Section is an excerpt of the TL Rules Chapter 3 - Welding, Section 12 - Welding of Hull Structures and TL Rules Chapter 6 - Welding of Steam Boilers, Pressure Vessels, Pipelines and Machinery Components. Because of re-issues of these Rules and this Section at different times, some temporary divergences may arise and in such circumstances the more recent Rules shall take precedence. Special questions and problems will be solved in an actual case by using these Rules in addition to the following information

2. Information contained in manufacturing documents

2.1 The shapes and dimensions of welds and, where proof by calculation is supplied, the requirements applicable to welded joints (the weld quality grade, detail category) are to be stated in drawings and other manufacturing documents (parts lists, welding and inspection schedules). In special cases, e. g. where special materials are concerned, the documents shall also state the welding method, the welding consumables used, heat input and control, the weld build-up and any post-weld treatment which may be required.

2.2 Symbols and signs used to identify welded joints shall be explained if they depart from the symbols and definitions contained in the relevant standards (e.g. DIN standards). Where the weld preparation (together with approved methods of welding) conforms both to normal shipbuilding practice and to these Rules and recognized standards, where applicable, no special description is needed.

3. Materials, weldability

3.1 Only base materials of proven weldability, see Section 3, may be used for welded structures. Any approval conditions of the steel or of the procedure qualification tests and the steel maker's recommendations are to be observed.

3.2 For normal strength hull structural steels grades A, B, D and E which have been tested by TL, weldability is considered to have been proven.

3.3 Higher strength hull structural steel grades AH/DH/EH/FH which have been approved by TL in accordance with the relevant requirements of the TL Rules, Chapter 2 and 3 - Materials and Welding, have had their weldability examined and, provided their handling is in accordance with normal shipbuilding practice, may be considered to be proven.

3.4 High strength (quenched and tempered) fine grain structural steels, low temperature steels, stainless and other (alloyed) structural steels require special approval by TL. Proof of weldability of the respective steel is to be presented in connection with the welding procedure and the welding consumables.

3.5 Steel castings and forgings shall comply with the Rules for Materials and shall have been tested by TL. The carbon content of components made from carbon and carbon-manganese steels/castings for welded structures shall not exceed 0,23 % C at ladle analysis (piece analysis max. 0,25 % C).

3.6 Light metal alloys must have been tested by TL in accordance with the Rules for Materials. Their weldability must have been verified in combination with welding processes and welding consumables. It can generally be taken for granted in the case of the alloys mentioned in the Rules for Materials.

3.7 Welding consumables used are to be suitable for the parent metal to be welded and are to be approved by TL. Where filler materials having strength properties deviating (downwards) from the parent metal are used (upon special agreement by TL), this has to be taken into account when dimensioning the welded joints.

4. Manufacture and testing

4.1 The manufacture of welded structural components may only be carried out in workshops or plants that have been approved. The requirements that have to be observed in connection with the fabrication of welded joints are laid down in the TL Rules Chapter 3 - Welding.

4.2 The weld quality grade of welded joints without proof by calculation, see 2.1, depends on the significance of the welded joint for the total structure and on its location in the structural element (location to the main stress direction) and on its stressing. For details concerning the type, scope and manner of testing, see TL Rules Chapter 3- Welding, Section 12- Welding of Hull Structures, I. Where proof of fatigue strength is required, in addition the requirements of Section 17 apply.

B. Design

1. General design principles

1.1 During the design stage welded joints are to be planned such as to be accessible during fabrication, to be located in the best possible position for welding and to permit proper welding sequence.

1.2 Both the welded joints and the sequence of welding involved are to be so planned as to keep residual welding stresses to a minimum in order to avoid excessive deformation. Welded joints should not be over sized, see also 3.3.3.

1.3 When planning welded joints, a procedure must be established to ensure the type and grade of weld envisaged, such as full root weld penetration in the case of HV or DHV (K) weld seams, can be perfectly executed under the conditions set by the limitations of the manufacturing process applied. If this is not the case, a simpler type of weld seam shall be selected and its possibly lower load bearing capacity shall be taken into account in the design of the component.

1.4 Highly stressed welded joints - which, therefore, are generally subject to examination - are to be so designed that the most suitable method of testing for faults can be used (radiography, ultrasonic, surface crack testing methods) in order that a reliable examination may be carried out.

1.5 Special characteristics peculiar to the material, such as the lower strength values of rolled material in the thickness direction (see 2.5.1) or the softening of cold worked aluminium alloys as a result of welding, are factors which have to be taken into account when designing welded joints.

1.6 In cases where different types of material are paired and operate in sea water or any other electrolytic medium, for example welded joints made between unalloyed carbon steels and stainless steels in the wear-resistant cladding in rudder nozzles or in the cladding of rudder shafts, the resulting differences in potential greatly increase the susceptibility to corrosion and must, therefore, be given special attention.

2. Design details

2.1 Stress flow, transitions

2.1.1 All welded joints on primary supporting members shall be designed to provide as smooth a stress profile as possible with no major internal or external notches, no discontinuities in rigidity and no obstructions to strains, see Section 4, J.

2.1.2 This applies in analogous manner to the welding of subordinate components on to primary supporting members whose exposed plate or flange edges should, as far as possible, be kept free from notch effects due to welded attachments. Regarding the in-admissibility of weldments to the upper edge of the sheer strake, see Section 8, B.1.4. This applies similarly to weldments to the upper edge of continuous side coamings of large openings.

2.1.3 Butt joints in long or extensive continuous structures such as bilge keels, fenders, crane rails, slop coamings, etc. attached to primary structural members are therefore to be welded over their entire crosssection.

2.1.4 Wherever possible, joints (especially site joints) in girders and sections shall not be located in areas of high bending stress. Joints at the knuckle of flanges are to be avoided.

2.1.5 The transition between differing component dimensions shall be smooth and gradual. Where the depth of web of girders or sections differs, the flanges or bulbs are to be bevelled and the web slit and expanded or pressed together to equalize the depths of the members. The length of the transition should be at least equal twice the difference in depth.

2.1.6 Where the plate thickness differs at joints perpendicularly to the direction of the main stress, differences in thickness greater than 3 mm must be accommodated by bevelling the proud edge in the manner shown in Fig. 15.1 at a ratio of at least 1 : 3 or according to the notch category. Differences in thickness of 3 mm or less may be accommodated within the weld.

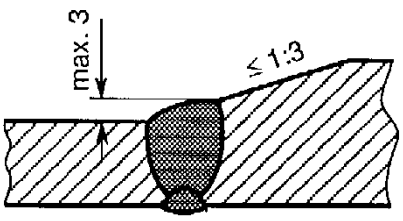

Fig. 15.1 Accommodation of differences of thickness

2.1.7 For the welding on of plates or other relatively thin-walled elements, steel castings and forgings should be appropriately tapered or provided with integrally cast or forged welding flanges in accordance with Fig. 15.2.

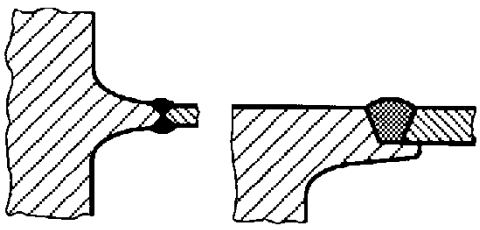

Fig. 15.2 Welding flanges on steel castings of forgings

2.1.8 For the connection of shaft brackets to the boss and shell plating, see 4.3 and Section 11, D.; for the connection of horizontal coupling flanges to the rudder body, see 4.4. For the required thickened rudderstock collar required with build-up welds and for the connection of the coupling flange, see 2.7 and Section 12, E.2.4. The joint between the rudderstock and the coupling flange must be welded over the entire cross-section.

2.2 Local clustering of welds, minimum spacing

2.2.1 The local clustering of welds and short distances between welds are to be avoided. Adjacent butt welds should be separated from each other by a distance of at least:

50 mm + 4 x plate thickness

Fillet welds should be separated from each other and from butt welds by a distance of at least:

30 mm + 2 x plate thickness

The width of replaced or inserted plates (strips) should, however, be at least 300 mm or ten times the plate thickness, whichever is the greater.

2.2.2 Reinforcing plates, welding flanges, mountings and similar components socket-welded into plating should be of the following minimum size:

D_{min} = 170 + 3 (t - 10) ≥ 170mm

D = diameter of round or length of side of angular weldments [mm]

t = plating thickness [mm]

The corner radii of angular socket weldments should be 5 t [mm] but at least 50 mm. Alternatively the "longitudinal seams" are to extend beyond the "transverse seams". Socket weldments are to be fully welded to the surrounding plating.

Regarding the increase of stress due to different thickness of plates see also Section 17, B.1.3.

2.3 Welding cut-outs

2.3.1 Welding cut-outs for the (later) execution of butt or fillet welds following the positioning of transverse members should be rounded (minimum radius 25 mm or twice the plate thickness, whichever is the greater) and should be shaped to provide a smooth transition on the adjoining surface as shown in Fig. 15.3 (especially necessary where the loading is mainly dynamic).

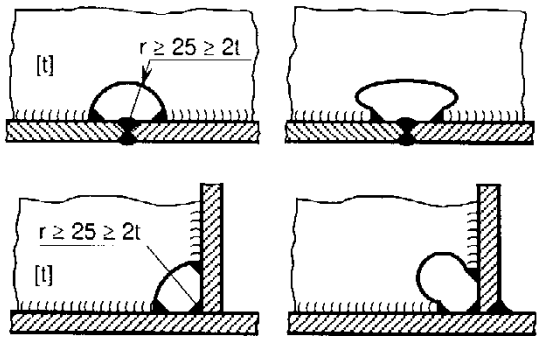

Fig. 15.3 Welding cut-outs

2.3.2 Where the welds are completed prior to the positioning of the crossing members, no welding cutouts are needed. Any weld reinforcements present are to be machined off prior to the location of the crossing members or these members are to have suitable cut-outs.

2.4 Local reinforcements, doubling plates

2.4.1 Where platings (including girder plates and tube walls) are subjected locally to increased stresses, thicker plates should be used wherever possible in preference to doubling plates. Bearing bushes, hubs etc. shall invariably take the form of thicker sections welded into the plating, see 2.2.2.

2.4.2 Where doublings cannot be avoided, the thickness of the doubling plates should not exceed twice the plating thickness. Doubling plates whose width is greater than approximately 30 times their thickness shall be plug welded to the underlying plating in accordance with 3.3.11 at intervals not exceeding 30 times the thickness of the doubling plate.

2.4.3 Along their (longitudinal) edges, doubling plates shall be continuously fillet welded with a throat thickness "a" of 0,3 x the doubling plate thickness. At the ends of doubling plates, the throat thickness "a" at the end faces shall be increased to 0,5 x the doubling plate thickness but shall not exceed the plating thickness (see Fig. 15.4).

The welded transition at the end faces of the doubling plates to the plating should form with the latter an angle of 45° or less.

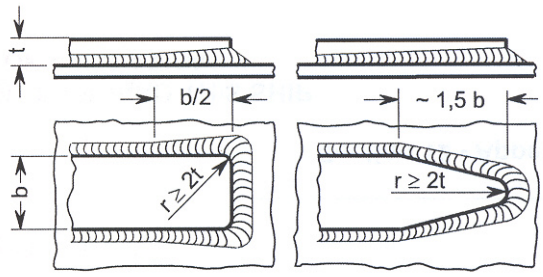

Fig. 15.4 The ends of doubling plates

2.4.4 Where proof of fatigue strength is required, see Section 17, the configuration of the end of the doubling plate must conform to the selected detail category.

2.4.5 Doubling plates are not permitted in tanks for flammable liquids.

2.5 Intersecting members, stress in the thickness direction

2.5.1 Where, in the case of intersecting members, plates or other rolled products are stressed in the thickness direction by shrinking stresses due to the welding and/or applied loads, suitable measures shall be taken in the design and fabrication of the structures to prevent lamellar tearing (stratified fractures) due to the anisotropy of the rolled products.

2.5.2 Such measures include the use of suitable weld shapes with a minimum weld volume and a welding sequence designed to reduce transverse shrinkage. Other measures are the distribution of the stresses over a larger area of the plate surface by using a build-up weld or the joining together of several "fibres" members-

stressed in the thickness direction as exemplified by the deck stringer/sheer strake joint shown in Fig. 15.11.

2.5.3 In case of very severe stresses in the thickness direction due, for example, to the aggregate effect of the shrinkage stresses of bulky single or double-bevel butt welds plus high applied loads, plates with guaranteed through thickness properties (extra high-purity material and guaranteed minimum reductions in area of tensile test specimens taken in thickness direction) **(1)** are to be used.

2.6 Welding of cold formed sections, bending radii

2.6.1 Wherever possible, welding should be avoided at the cold formed sections with more than 5 % permanent elongation **(2)** and in the adjacent areas of structural steels with a tendency towards strain ageing.

2.6.2 Welding may be performed at the cold formed sections and adjacent areas of hull structural steels and comparable structural steels (e.g. those in quality groups S... J... and S... K... to DIN-EN 10025) provided that the minimum bending radii are not less than those specified in Table 15.1.

Table 15.1 Minimum inner bending radii for cold formed sections

Plate thickness t	Minimum inner bending radius r
to 4 mm	1,0 x t
to 8 mm	1,5 x t
to 12 mm	2,0 x t
to 24 mm	3,0 x t
over 24 mm	5,0 x t

Note:
The bending capacity of the material may necessitate a larger bending radius.

2.6.3 For other steels and other materials, where applicable, the necessary minimum bending radius shall, in case of doubt, be established by test. Proof of adequate toughness after welding may be stipulated for steels with minimum yield stress of more than 355 N/mm^2 and plate thicknesses of 30 mm and above which have undergone cold forming resulting in 2 % or more permanent elongation.

2.7 Build-up welds on rudder stocks and pintles

2.7.1 Wear resistance and/or corrosion resistant build-up welds on the bearing surfaces of rudder-stocks, pintles etc. shall be applied to a thickened collar exceeding by at least 20 mm the diameter of the adjoining part of the shaft.

2.7.2 Where a thickened collar is impossible for design reasons, the build-up weld may be applied to the smooth shaft provided that relief-turning in accordance with 2.7.3 is possible (leaving an adequate residual diameter).

2.7.3 After welding, the transition areas between the welded and non-welded portions of the shaft shall be relief-turned with large radii, as shown in Fig. 15.5, to remove any base material whose structure close to the concave groove has been altered by the welding operation and in order to effect the physical separation of geometrical and metallurgical "notches".

---

(1) *See TL Rules Chapter 2- Materials, Section 3 and also Supply Conditions 096 for Iron and Steel Products, "Plate, strip and universal steel with improved resistance to stress perpendicular to the product surface" issued by the German Iron and Steelmakers' Association.*

(2) *Elongation ε in the outer tensile-stressed zone 100*

$$\varepsilon = \frac{100}{1 + 2\ r/t} \quad [\%]$$

r = *inner bending radius [mm]*

t = *plate thickness [mm]*

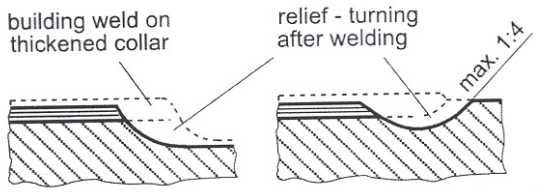

Fig. 15.5 Build-up welds applied to rudderstocks and pintles

3. Weld shapes and dimensions

3.1 Butt joints

3.1.1 Depending on the plate thickness, the welding method and the welding position, butt joints shall be of the square, V or double-V shape conforming to the relevant standards (e.g. DIN EN 22553, DIN EN 29692, DIN EN ISO 9692-2, DIN EN ISO 9692-3). Where other weld shapes are applied, these are to be specially described in the drawings. Weld shapes for special welding processes such as single-side or electro slag welding must have been tested and approved in the context of a welding procedure test.

3.1.2 As a matter of principle, the rear sides of butt joints shall be grooved and welded with at least one capping pass. Exceptions to this rule, as in the case of submerged-arc welding or the welding processes mentioned in 3.1.1, require to be tested and approved in connection with a welding procedure test. The effective weld thickness shall be deemed to be the plate thickness, or, where the plate thicknesses differ, the lesser plate thickness. Where proof of fatigue strength is required, see Section 17, the detail category depends on the execution (quality) of the weld.

3.1.3 Where the aforementioned conditions cannot be met, e.g. where the welds are accessible from one side only, the joints shall be executed as lesser bevelled welds with an open root and an attached or an integrally machined or cast, permanent weld pool support (backing) as shown in Fig. 15.6.

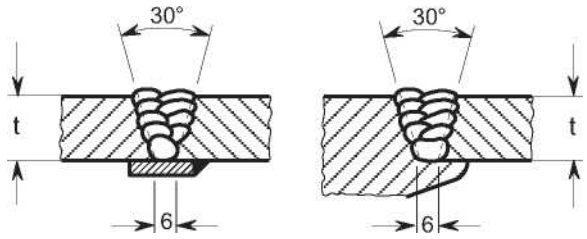

Fig. 15.6 Single-side welds with permanent weldpool supports (backings)

3.2 Corner, T and double-T (cruciform) joints

3.2.1 Corner, T and double-T (cruciform) joints with complete union of the abutting plates shall be made as single or double-bevel welds with a minimum shown in Fig. 15.7 and with grooving of the root and capping from the opposite side.

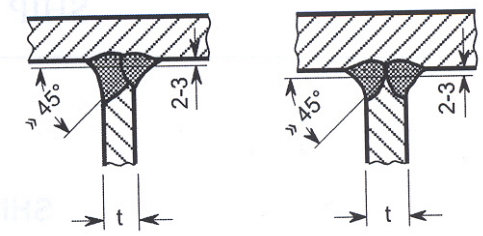

Fig. 15.7 Single and double-bevel welds with full root penetration

The effective weld thickness shall be assumed as the thickness of the abutting plate. Where proof of fatigue strength is required, see Section 17, the detail category depends on the execution (quality) of the weld.

3.2.2 Corner, T and double-T (cruciform) joints with a defined incomplete root penetration, as shown in Fig. 15.8, shall be made as single or double-bevel welds, as described in 3.2.1, with a back-up weld but without grooving of the root.

The effective weld thickness may be assumed as the thickness of the abutting plate t, where f is the income-plete root penetration of 0,2 t with a maximum of 3 mm, which is to be balanced by equally sized double fillet welds on each side. Where proof of fatigue strength is required, see Section 17, these welds are to be assigned to type 21.

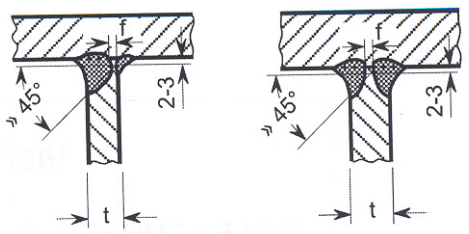

Fig. 15.8 Single and double-bevel welds with defined in complete root penetration

3.2.3 Corner, T and double-T (cruciform) joints with both an unwelded root face c and a defined incomplete root penetration f shall be made in accordance with Fig. 15.9.

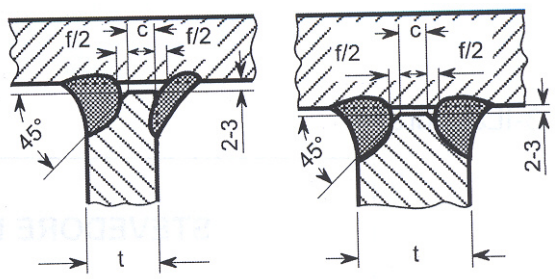

Fig. 15.9 Single and double-bevel welds with unwelded root face and defined incomplete root penetration

The effective weld thickness shall be assumed as the thickness of the abutting plate t minus (c + f), where f is to be assigned a value of 0,2 t subject to a maximum of 3 mm. Where proof of fatigue strength is required, see Section 17, these welds are to be assigned to types 22 or 23.

3.2.4 Corner, T and double-T (cruciform) joints which are accessible from one side only may be made in accordance with Fig. 15.10 in a manner analogous to the butt joints referred to in 3.1.3 using a weld pool support (backing), or as single-side, single bevel welds in a manner similar to those prescribed in 3.2.2.

The effective weld thickness shall be determined by analogy with 3.1.3 or 3.2.2, as appropriate. Wherever possible, these joints should not be used where proof of fatigue strength is required, see Section 17.

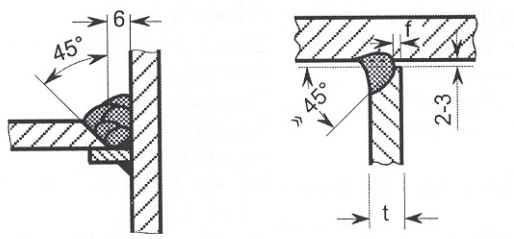

Fig. 15.10 Single-side welded T joints

3.2.5 Where corner joints are flush, the weld shapes shall be as shown in Fig. 15.11 with bevelling of at least 30° of the vertically drawn plates to avoid the danger of lamellar tearing. A similar procedure is to be followed in the case of fitted T joints (uniting three plates) where the abutting plate is to be socketed between the aligned plates.

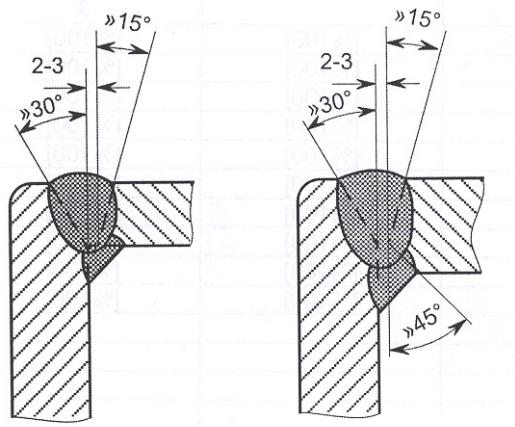

Fig. 15.11 Flush fitted corner joints

3.2.6 Where, in the case of T joints, the direction of the main stress lies in the plane of the horizontal plates (e.g. the plating) shown in Fig. 15.12 and where the connection of the perpendicular (web) plates is of secondary importance, welds connecting three plates may be made in accordance with Fig. 15.12 (with the exception of those subjected mainly to dynamic loads).

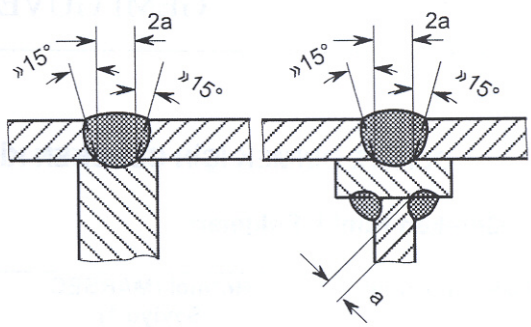

Fig. 15.12 Three plate connection

The effective thickness of the weld connecting the horizontal plates shall be determined in accordance with 3.2.2. The requisite "a" dimension is determined by the joint uniting the vertical (web) plates and shall, where necessary, be determined in accordance with Table 15.4 or by calculation as for fillet welds.

3.3 Fillet weld connections

3.3.1 In principle fillet welds are to be of the double fillet weld type. Exceptions to this rule (as in the case of closed box girders and mainly shear stresses parallel to the weld) are subject to approval in each individual case. The throat thickness "a" of the weld (the height of the inscribed isosceles triangle) shall be determined in accordance with Table 15.4 or by calculation according to C. The leg length of a fillet weld is to be not less than 1,4 times the throat thickness "a". For fillet welds at doubling plates, see 2.4.3; for the welding of the deck stringer to the sheer strake, see Section 8, B.1.4 and for bracket joints, see C.2.7.

3.3.2 The relative fillet weld throat thicknesses specified in Table 15.3 relate to normal and higher strength hull structural steels and comparable structural steels. They may also be generally applied to high strength structural steels and non-ferrous metals provided that the "tensile shear strength" of the weld metal used is at least equal to the tensile strength of the base material. Failing this, the "a" dimension shall be increased accordingly and the necessary increment shall be established during the welding procedure test (see TL Rules Chapter 3-Welding, Section 12 – Welding of Hull Structures, F). Alternatively proof by calculation taking account of the properties of the weld metal may be presented.

Note:

In the case of higher-strength aluminium alloys (e.g. AlMg4,5Mn), such an increment may be necessary for cruciform joints subject to tensile stresses, as experience shows that in the welding procedure tests the tensile-shear strength of fillet welds (made with matching filler metal) often fails to attain the tensile strength of the base material. See also TL Rules Chapter 3 – Welding, Section 12- Welding of Hull Structures F.5.

3.3.3 The throat thickness of fillet welds shall not exceed 0,7 times the lesser thickness of the parts to be connected (generally the web thickness). The minimum throat thickness is defined by the expression:

$$a_{min} = \sqrt{\frac{t_1 + t_2}{3}} \quad [mm]$$

but not less than 3 mm

t_1 = thinner (e.g. the web) plate [mm]

t_2 = thicker (e.g. the flange) plate [mm]

A smaller minimum fillet weld throat thickness may be agreed to if its faultless execution is demonstrated by means of a welding procedure test.

3.3.4 It is desirable that the fillet weld section shall be flat faced with smooth transitions to the base material. Where proof of fatigue strength is required, see Section 17, machining of the weld (grinding to remove notches) may be required depending on the notch category. The weld should penetrate at least close to the theoretical root point.

3.3.5 Where mechanical welding processes are used which ensure deeper penetration extending well beyond the theoretical root point and where such penetration is uniformly and dependably maintained under production conditions, approval may be given for this deeper penetration to be allowed for in determining the throat thickness. The effective dimension:

$$a_{deep} = a + \frac{2 \min e}{3} \quad [mm]$$

shall be ascertained in accordance with Fig. 15.13 and by applying the term "min e" to be established for each welding process by a welding procedure test. The throat thickness shall not be less than the minimum throat thickness related to the theoretical root point.

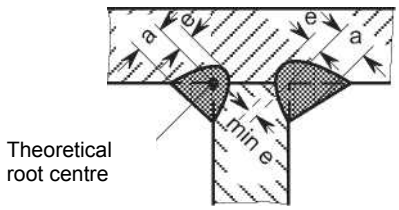

Fig. 15.13 Fillet welds with increased pentration

3.3.6 When welding on top of shop primers which are particularly liable to cause porosity, an increase of the "a" dimension by up to 1 mm may be stipulated depending on the welding process used. This is specially applicable where minimum fillet weld throat thicknesses are employed. The size of the increase shall be decided on a case by case basis considering the nature and severity of the stressing following the test results of the shop primer in accordance with the TL Rules Chapter 6- Welding of Steam Boilers, Pressure Vessels, Pipelines and Machinery Components, F. This applies in analogous manner to welding processes where provision has to be made for inadequate root penetration.

3.3.7 Strengthened fillet welds continuous on both sides are to be used in areas subjected to severe dynamic loads (e.g. for connecting the longitudinal and transverse girders of the engine base to top plates close to foundation bolts, see Table 15.3), unless single or double-bevel welds are stipulated in these locations. In these areas the "a" dimension shall equal 0,7 times the lesser thickness of the parts to be welded.

3.3.8 Intermittent fillet welds in accordance with Table 15.3 may be located opposite one another (chain intermittent welds, possibly with scallops) or may be staggered (see Fig. 15.14). In case of small sections other types of scallops may be accepted.

In water and cargo tanks, in the bottom area of fuel oil tanks and of spaces where condensed or sprayed water may accumulate and in hollow components (e.g. rudders) threatened by corrosion, only continuous or intermittent fillet welds with scallops shall be used. This applies accordingly also to areas, structures or spaces exposed to extreme environmental conditions or which are exposed to corrosive cargo.

There shall be no scallops in areas where the plating is subjected to severe local stresses (e.g. in the bottom section of the fore ship) and continuous welds are to be preferred where the loading is mainly dynamic.

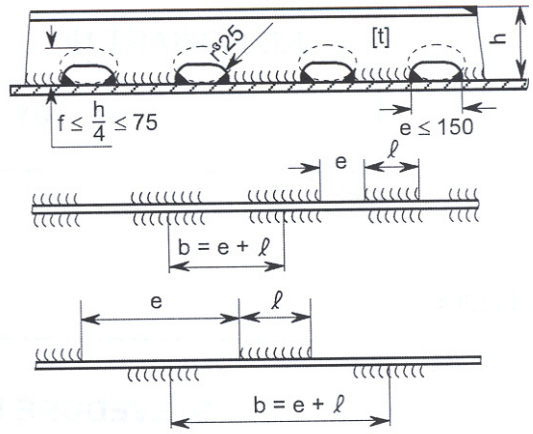

Fig. 15.14 Scallop, chain and staggered welds

3.3.9 The throat thickness a_u of intermittent fillet welds is to be determined according to the selected pitch ratio b/ℓ by applying the formula:

$$a_u = 1{,}1 \cdot a \left[\frac{b}{\ell}\right] \quad [\text{mm}]$$

a = required fillet weld throat thickness [mm] for a continuous weld according to Table 15.3 or determined by calculation

b = pitch = e + ℓ [mm]

e = interval between the welds [mm]

ℓ = length of fillet weld [mm]

The pitch ratio b/ℓ should not exceed 5. The maximum unwelded length (b - ℓ with scallop and chain welds, or b/2 - ℓ with staggered welds) should not exceed 25 times the lesser thickness of the parts to be welded. The length of scallops should, however, not exceed 150 mm.

3.3.10 Lap joints should be avoided wherever possible and are not to be used for heavily loaded components. In the case of components subject to low loads lap joints may be accepted provided that, wherever possible, they are orientated parallel to the direction of the main stress. The width of the lap shall be 1,5 t+15 mm (t= thickness of the thinner plate). Except where another value is determined by calculation, the fillet weld throat thickness "a" shall equal 0,4 times the lesser plate thickness, subject to the

requirement that it shall not be less than the minimum throat thickness required by 3.3.3. The fillet weld must be continuous on both sides and must meet at the ends.

3.3.11 In the case of plug welding, the plugs should, wherever possible, take the form of elongated holes lying in the direction of the main stress. The distance between the holes and the length of the holes may be determined by analogy with the pitch "b" and the fillet weld length "ℓ" in the intermittent welds covered by 3.3.8. The fillet weld throat thickness "a_u" may be established in accordance with 3.3.9. The width of the holes shall be equal to at least twice the thickness of the plate and shall not be less than 15 mm. The ends of the holes shall be semi-circular. Plates or sections placed underneath should at least equal the perforated plate in thickness and should project on both sides to a distance of 1,5 x the plate thickness subject to a maximum of 20 mm. Wherever possible only the necessary fillet welds shall be welded, while the remaining void is packed with a suitable filler. Lug joint welding is not allowed.

4. Welded joints of particular components

4.1 Welds at the ends of girders and stiffeners

4.1.1 As shown in Fig. 15.15, the web at the end of intermittently welded girders or stiffeners is to be continuously welded to the plating or the flange plate, as applicable, over a distance at least equal to the depth "h" of the girder or stiffener subject to a maximum of 300 mm. Regarding the strengthening of the welds at the ends, extending normally over 0,15 · ℓ of the span, see Table 15.4.

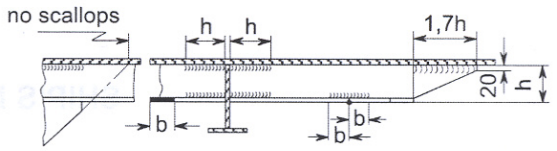

Fig. 15.15 Welds at the ends of girders and stiffeners

4.1.2 The areas of bracket plates should be continuously welded over a distance at least equal to the length of the bracket plate. Scallops are to be located only beyond a line imagined as an extension of the free edge of the bracket plate.

4.1.3 Wherever possible, the free ends of stiffeners shall abut against the transverse plating or the webs of sections and girders so as to avoid stress concentrations in the plating. Failing this, the ends of the stiffeners are to be sniped and continuously welded over a distance of at least 1,7 h subject to a maximum of 300 mm.

4.1.4 Where butt joints occur in flange plates, the flange shall be continuously welded to the web on both ides of the joint over a distance at least equal to the width of the flange.

4.2 Joints between section ends and plates

4.2.1 Welded joints connecting section ends and plates may be made in the same plane or lapped. Where no design calculations have been carried out or stipulated for the welded connections, the joints may be analogously to those shown in Fig. 15.16.

4.2.2 Where the joint lies in the plane of the plate it may conveniently take the form of a single-bevel butt weld with fillet. Where the joint between the plate and the section end overlaps, the fillet weld must be continuous on both sides and must meet at the ends. The necessary "a" dimension is to be calculated in accordance with C.2.6. The fillet weld throat thickness is not to be less than the minimum specified in 3.3.3.

4.3 Welded propeller bracket joints

4.3.1 Unless cast in one piece or provided with integrally cast welding flanges analogous to those prescribed in 2.1.7, see Fig. 15.17, strut barrel and struts are to be connected to each other and to the shell plating in the manner shown in Fig. 15.18.

4.3.2 In the case of single-strut brackets no welding is to be performed on the arm or close to the position of constraint. Such components must be provided with integrally forged or cast welding flanges.

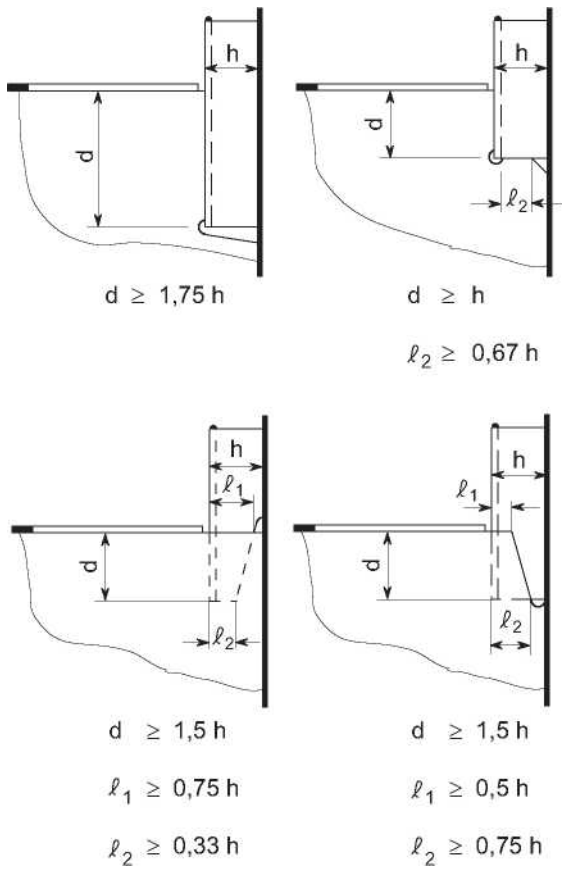

Fig. 15.16 Joints uniting section ends and plates

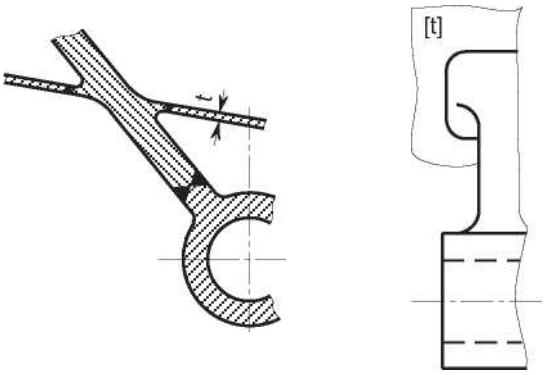

Fig. 15.17 Propeller bracket with integrally cast welding flanges

4.4 Rudder coupling flanges

4.4.1 Unless forged or cast steel flanges with integrally forged or cast welding flanges in conformity with 2.1.7 are used, horizontal rudder coupling flanges are to be joined to the rudder body by plates of graduated thickness and full penetration single or double-bevel welds as prescribed in 3.2.1, see Fig. 15.19. See also Section 12, E.1.4 and E.2.4.

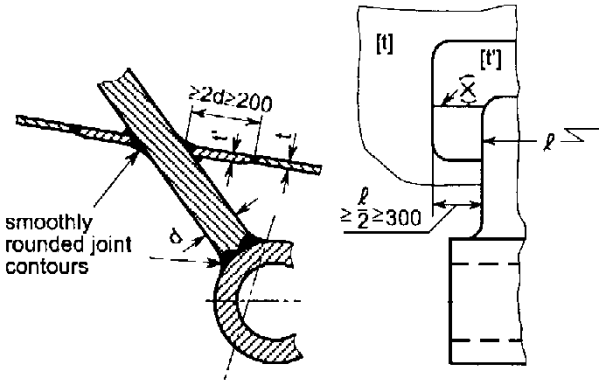

t = Plating thickness in accordance with Section 6, F. in [mm]

$t' = \frac{d}{3} + 5$ [mm] where d < 50 mm.

$t' = 3\sqrt{d}$ [mm] where d ≥ 50 mm.

For shaft brackets of elliptically shaped cross section d may be substituted by 2/3 d in the above formulea.

Fig. 15.18 Propeller bracket without integrally cast welding flanges

4.4.2 Allowance shall be made for the reduced strength of the coupling flange in the thickness direction, see 1.5 and 2.5. In case of doubt, proof by calculation of the adequacy of the welded connection shall be produced.

4.4.3 The welded joint between the rudder stock (with thickened collar, see 2.1.8) and the flange shall be made in accordance with Fig. 15.20.

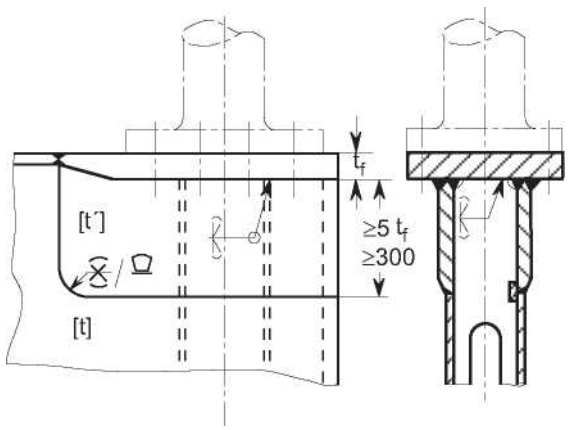

t = plating thickness [mm] see Section 12, F.2.1

t_f = Actual flange thickness in [mm]

$t' = \frac{t_f}{3} + 5$ [mm] where t_f < 50 mm.

$t' = 3\sqrt{t_f}$ [mm] where $t_f \geq 50$ mm.

Fig. 15.19 Horizontal rudder coupling flanges

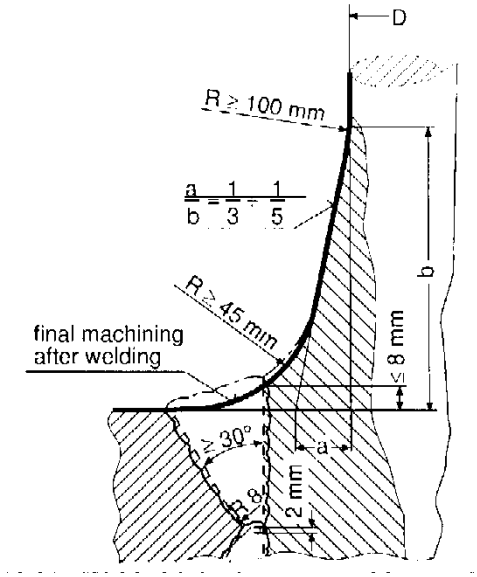

Fig. 15.20 Welded joint between rudder stock and coupling flange

C. Stress Analysis

1. General analysis of fillet weld stresses

1.1 Definition of stresses

For calculation purposes, the following stresses in a fillet weld are defined (see also Fig. 15.30):

$\sigma_\perp$ = normal stresses acting vertically to the direction of the weld seam

$\tau_\perp$ = shear stress acting vertically to the direction of the weld seam

$\tau_\parallel$ = shear stress acting in the direction of the weld seam

Normal stresses acting in the direction of the weld seam need not be considered.

For calculation purposes the weld seam area is $a \cdot \ell$.

Due to equilibrium conditions the following applies to the flank area vertical to the shaded weld seam area:
$\tau_\perp = \sigma_\perp$.

The equivalent stress is to be calculated by the following formula:

$$\sigma_v = \sqrt{\sigma_\perp^2 + \tau_\perp^2 + \tau_\parallel^2}$$

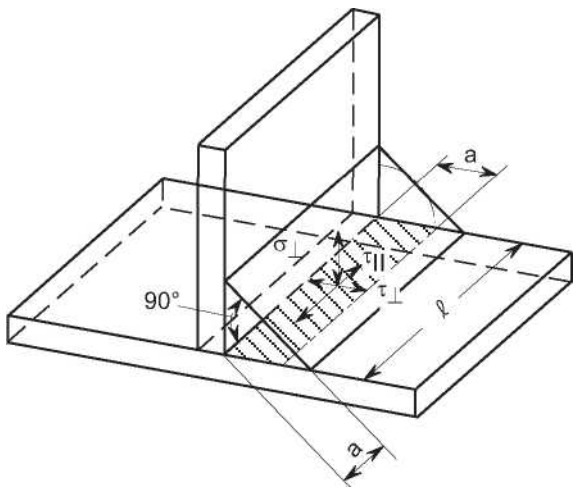

Fig. 15.21 Definition of stresses in a fillet weld

1.2 Definitions

a = throat thickness [mm]

ℓ = length of fillet weld [mm]

P = single force [N]

M = bending moment at the position considered [Nm]

Q = shear force at the point considered [N]

S = first moment of the cross sectional area of the flange connected by the weld to the web in relation to the neutral beam axis [cm^3]

I = moment of inertia of the girder section [cm^4]

W = section modulus of the connected section [cm^3]

2. Determination of stresses

2.1 Fillet welds stressed by normal and shear forces

Flank and frontal welds are regarded as being equal for the purposes of stress analysis. In view of this, normal and shear stresses are calculated as follows:

$$\sigma = \tau = \frac{P}{\Sigma a \cdot \ell} \quad [N/mm^2]$$

Joint as shown in Fig. 15.22:

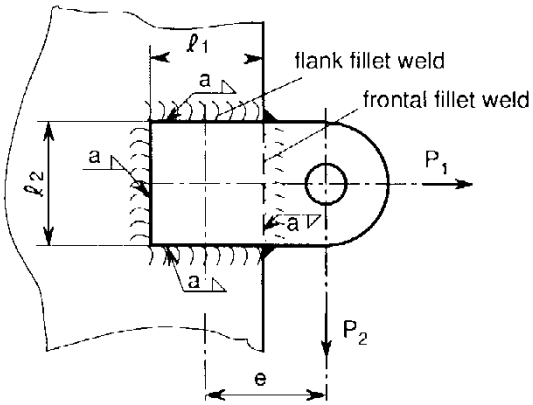

Fig. 15.22 Fillet weld joint with normal and shear forces

- Stresses in frontal fillet welds:

$$\tau_\perp = \frac{P_1}{2 \cdot a \ (\ell_1 + \ell_2)} \quad [N/mm^2]$$

$$\tau_\parallel = \frac{P_2}{2 \cdot a \ (\ell_1 + \ell_2)} \pm \frac{P_2 \cdot e}{2 \cdot a \cdot F_t} \quad [N/mm^2]$$

$$F_t = (\ell_1 + a) \cdot (\ell_2 + a) \quad [N/mm^2]$$

- Stresses in flank fillet welds:

$$\tau_\perp = \frac{P_2}{2 \cdot a \ (\ell_1 + \ell_2)} \quad [N/mm^2]$$

$$\tau_\parallel = \frac{P_1}{2 \cdot a \ (\ell_1 + \ell_2)} \pm \frac{P_2 \cdot e}{2 \cdot a \cdot F_t} \quad [N/mm^2]$$

ℓ_1, ℓ_2, e in [mm]

- Equivalent stress for frontal and flank fillet welds:

$$\sigma_v = \sqrt{\tau_\perp^2 + \tau_\parallel^2}$$

Joint as shown in Fig. 15.23:

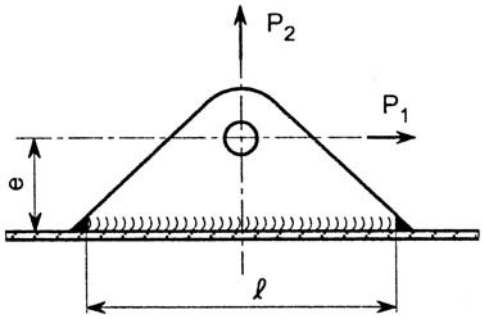

Fig. 15.23 Fillet weld joint with normal and shear forces

$$\tau_\perp = \frac{P_2}{2 \cdot \ell \cdot a} + \frac{3 \cdot P_1 \cdot e}{\ell^2 \cdot a} \quad [N/mm^2]$$

$$\tau_\parallel = \frac{P_1}{2 \cdot \ell \cdot a} \quad [N/mm^2]$$

Equivalent stress:

$$\sigma_v = \sqrt{\tau_\perp^2 + \tau_\parallel^2}$$

2.2 Fillet weld joints stressed by bending moments and shear forces

The stresses at the fixing point of a girder are calculated as follows (in Fig. 15.24 a cantilever beam is given as an example):

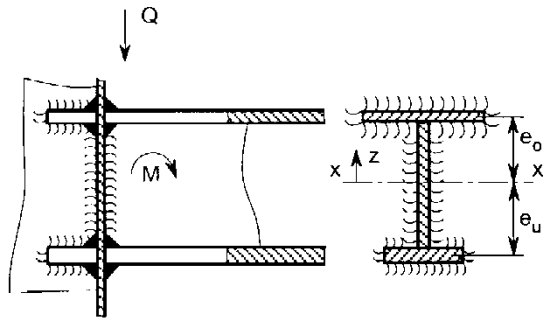

Fig. 15.24 Fillet weld joint at the fixing point of a girder

- Normal stress due to bending moment:

$$\sigma_{\perp(z)} = \frac{M}{I_s} z \quad [N/mm^2]$$

$$\sigma_{\perp max} = \frac{M}{I_s} e_u \quad [N/mm^2] \quad \text{if } e_u > e_0$$

$$\sigma_{1max} = \frac{M}{I_s} e_0 \quad [N/mm^2] \quad \text{if } e_u < e_0$$

- Shear stress due to shear force:

$$\tau_{\|(z)} = \frac{Q \cdot S_s(z)}{10 \cdot I_s \cdot \Sigma a} \quad [N/mm^2]$$

$$\tau_{\|max} = \frac{Q \cdot S_{smax}}{20 \cdot I_s \cdot a} \quad [N/mm^2]$$

I_s = moment of inertia of the welded joint related to the x-axis [cm^4]

$S_s(z)$ = the first moment of the connected weld section at the point under consideration [cm^3]

z = distance from the neutral axis [cm]

- Equivalent stress:

It has to be proved that neither $\sigma_{\perp max}$ in the region of the flange nor $\tau_{\|max}$ in the region of the neutral axis nor the equivalent stress $\sigma_v = \sqrt{\sigma_\perp^2 + \tau_\|^2}$ exceed the permitted limits given in 2.8 at any given point. The equivalent stress σ_v should always be calculated at the web-flange connection.

2.3 Fillet welded joints stressed by bending and torsional moments and shear forces

Regarding the normal and shear stresses resulting from bending, see 2.2. Torsional stresses resulting from the torsional moment M_T are to be calculated:

$$\tau_T = \frac{M_T \cdot 10^3}{2 \cdot a \cdot A_m} \quad [N/mm^2]$$

M_T = torsional moment [Nm]

A_m = sectional area [mm^2] enclosed by the weld seam

The equivalent stress composed of all three components (bending, shear and torsion) is calculated by means of the following formulae:

$$\sigma_v = \sqrt{\sigma_\perp^2 + \tau_\|^2 + \tau_T^2} \quad [N/mm^2]$$

where $\tau_\|$ and τ_T have not the same direction

$$\sigma_v = \sqrt{\sigma_\perp^2 + (\tau_\| + \tau_T)^2} \quad [N/mm^2]$$

where $\tau_\|$ and τ_T have the same direction

2.4 Continuous fillet welded joints between web and flange of bending girders

The stresses are to be calculated in way of maximum shear forces. Stresses in the weld's longitudinal direction need not to be considered. In the case of continuous double fillet weld connections the shear stress is to be calculated as follows:

$$\tau_\| = \frac{Q \cdot S}{20 \cdot I \cdot a} \quad [N/mm^2]$$

The fillet weld thickness required is:

$$a_{req} = \frac{Q \cdot S}{20 \cdot I \cdot \tau_{zul}} \quad [mm]$$

2.5 Intermittent fillet welded joints between web and flange of bending girders

Shear stress:

$$\tau_\| = \frac{Q \cdot S \cdot \alpha}{20 \cdot I \cdot a} \left(\frac{b}{\ell}\right) \quad [N/mm^2]$$

b = pitch

α = 1,1 stress concentration factor which takes into account increases in shear stress at the ends of the fillet weld seam "ℓ"

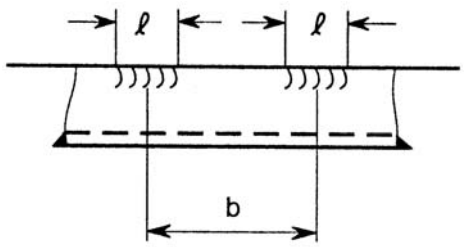

Fig. 15.25 Intermittant fillet welded joints

The fillet weld thickness required is:

$$a_{req} = \frac{Q \cdot S \cdot 1{,}1}{20 \cdot I \cdot \tau_{zul}} \left(\frac{b}{\ell}\right) \quad [N/mm^2].$$

2.6 Fillet weld connections on overlapped profile joints

2.6.1 Profiles joined by means of two flank fillet welds (see Fig. 15.26):

$$\tau_{\perp} = \frac{Q}{2 \cdot a \cdot d} \quad [N/mm^2]$$

$$\tau_{\parallel} = \frac{M \cdot 10^3}{2 \cdot a \cdot c \cdot d} \quad [N/mm^2]$$

The equivalent stress is:

$$\sigma_v = \sqrt{\tau_{\perp}^2 + \tau_{\parallel}^2} \quad [N/mm^2]$$

c, d, ℓ_h ℓ_2, r [mm] see Fig. 15.26

$$c = r + \frac{3\,\ell_1 - \ell_2}{4} \quad [mm]$$

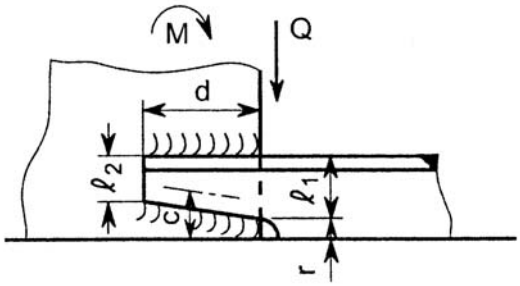

Fig. 15.26 Fillet flank welds for profile joints

As the influence of the shear force can generally be neglected, the required fillet weld thickness may be determined by the following formula:

$$a_{req} = \frac{W \cdot 10^3}{1{,}5 \cdot c \cdot d} \quad [mm]$$

2.6.2 Profiles joined by means of two flank and two frontal fillet welds (all round welding as shown in Fig. 15.27):

$$\tau_{\perp} = \frac{Q}{a\ (2\ d + \ell_1 + \ell_2)} \quad [N/mm^2]$$

$$\tau_{\parallel} = \frac{M \cdot 10^3}{a \cdot c\ (2\ d + \ell_1 + \ell_2)} \quad [N/mm^2]$$

The equivalent stress is:

$$\sigma_v = \sqrt{\tau_{\perp}^2 + \tau_{\parallel}^2}$$

$$a_{req} = \frac{W \cdot 10^3}{1{,}5 \cdot c \cdot d \left(1 + \frac{\ell_1 + \ell_2}{2\ d}\right)} \quad [mm]$$

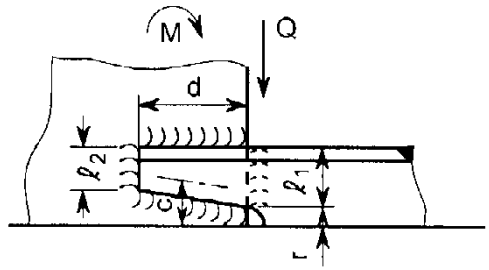

Fig. 15.27 Flank and frontal fillet welds for profile joints

2.7 Bracket joints

Where profiles are joined to brackets as shown in Fig. 15.28, the average shear stress is:

$$\tau = \frac{3 \cdot M \cdot 10^3}{4 \cdot a \cdot d^2} + \frac{Q}{2 \cdot a \cdot d} \quad [N/mm^2]$$

d = length of overlap [mm]

The required fillet weld thickness is to be calculated from the section modulus of the profile as follows:

$$a_{req} = \frac{1000 \cdot W}{d^2} \quad [mm].$$

(The shear force Q has been neglected.)

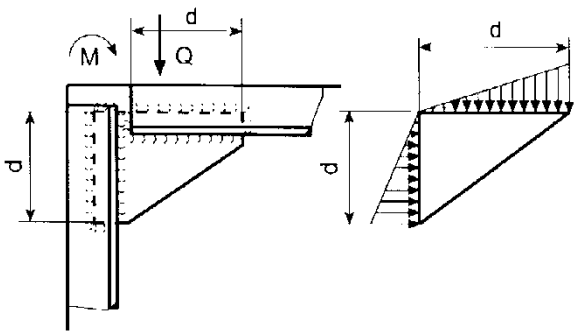

Fig. 15.28 A bracket joint with idealized stress distribution resulting from the moment M and shear force Q

2.8 Permissible stress

The permissible stress in welded joints has to fulfil the following condition:

$$\sigma_v \leq \frac{\alpha_w \cdot R_{eH}}{\gamma_m}$$

α_w = 1,0 for full penetration welds

= 0,8 for fillet welds

γ_m = see Section 4, Table 4.1

R_{eH} = minimum yield stress [N/mm^2]. In case of aluminium alloys $R_{p0,2}$ is to be taken.

The values to be inserted for R_{eH} and $R_{p0,2}$ respectively are based on the assumption that the strength values of the weld metal used are at least as high as those of the parent metal. If this is not the case, the "a"-value calculated must be increased accordingly (seeB.3.3.2).

Table 15.2 Permissible stresses for welded joints releated to load case LCC (3)

Material		R_{eH} or $R_{p0,2}$ [N/mm^2]	Permissible stresses [N/mm^2] equivalent stress, shear stress σ_{vp} , τ_p
normal strength hull structural steel	TL-A/B/D/E **(1)**	235	115
higher strength structural steels	TL-A/D/E 27 S	265	125
	TL-A/D/E 32	315	145
	TL-A/D/E 36 **(2)**	355	160
	TL-A/D/E 40	390	175
high strength steels	TL-A/D/E 460	460	200
	TL-A/D/E 690	685	290
austenitic and austenitic-ferritic stainless steels	1.4306/304 L	180	110
	1.4404/316 L	190	
	1.4435/316 L	190	
	1.4438/317 L	195	
	1.4541/321	205	
	1.4571/316 Ti	215	
	1.4406/316 LN	280	130
	1.4429/316 LN	295	
	1.4439/(316 LN)	285	
	1.4462/(318)	480	205
aluminium alloys	EN-AW 5754	80 **(3)**	35 **(5)**
	EN-AW 5083	125 **(3)**	56 **(6)**
	EN-AW 6060	65 **(4)**	30 **(7)**
	EN-AW 6082	110 **(4)**	45 **(6)**

(1) *Valid also for S235 structural steel according to DIN-EN 10025*
(2) *Valid also for grade S355 structural steel according to DIN-EN 10025*
(3) *Plates, soft condition*
(4) *Sections, cold hardened*
(5) *Welding consumables: S-AlMg3, S-AlMg5 or S-Al Mg4,5Mn*
(6) *Welding consumables: S-AlMg4,5Mn*
(7) *Welding consumables: S-AlMg3, S-AlMg5, S-AlMg4,5Mn or S-Al-Si5*

(3) *See Section 4, Table 4.1*

Table 15.3 Fillet weld connections

Structural parts to be connected	Basic thickness of fillet welds a/t_0 (1) for double continuous fillet welds (2)	Intermittent fillet welds permissible (3)
Bottom structures		
Transverse and longitudinal girders to each other	0,35	x
- to shell and inner bottom	0,20	x
Center girder to flat keel and inner bottom	0,40	
Transverse and longitudinal girders and stiffeners including shell plating in way of bottom strengthening forward	0,30	
Machinery space		
Transverse and longitudinal girders to each other	0,35	
- to shell and inner bottom	0,30	
Inner bottom to shell	0,40	
Machinery foundation		
Longitudinal and transverse girders to each other and to the shell	0,40	
- to inner bottom and face plates	0,40	
- to top plates	0,50 **(4)**	
- in way of foundation bolts	0,70 **(4)**	
- to brackets and stiffeners	0,30	
longitudinal girders of thrust bearing to inner bottom	0,40	
Decks		
to shell (general)	0,40	
Deck stringer to sheerstrake (see also Section 8, B.1.4)	0,50	
Frames, stiffeners, beams etc.		
general	0,15	x
in peak tanks	0,30	x
bilge keel to shell	0,15	
Transverses, longitudinal and transverse girders		
general	0,15	x
within 0,15 of span from supports	0,25	
cantilevers	0,40	
pillars to decks	0,40	
Bulkheads, tank boundaries, walls of superstructures and deckhouses		
- to decks, shell and walls	0,40	
Hatch coamings		
- to deck	0,40	
- to longitudinal stiffeners	0,30	
Hatch covers		
general	0,15	x **(5)**
watertight or oiltight fillet welds	0,30	
Rudder	0,25	x
plating to webs		
Stem	0,25	x
plating to webs		

(1) *t_0 = thickness of the thinner plate.*
(2) *In way of large shear forces larger throat thicknesses may be required on the bases of calculations according to C.*
(3) *For intermittent welding in spaces liable to corrosion B.3.3.8 is to be observed.*
(4) *For plate thicknesses exceeding 15 mm single or double bevel butt joints with, full penetration or with defined incomplete root penetration according to Fig. 15.8 to be applied.*
(5) *Excepting hatch covers above holds provided for ballast water*

SECTION 16

NOISE, VIBRATION AND SHOCK CONSIDERATIONS

A. General

1. Noise, vibration and shock aspects as part of the concept of signature

1.1 The relationship between the noise, vibration and shock characteristics of a naval ship are mainly based on the same physical phenomena. The concept of signature to be defined for a naval ship can be mainly influenced by noise, vibration and shock behaviour. Therefore these aspects should be regarded together in each case.

1.2 If required, the concept of signature of the naval ship has to be defined by the Naval Authority.

1.3 Noise, vibration and shock requirements have to be agreed upon between Naval Authority and shipyard in each individual case. Recommendations given in this Section should be only regarded as a guideline for establishing the building specification between Naval Authority and shipyard.

1.4 Theoretical examinations and / or approval of noise, vibration and shock related aspects are not part of the classification process. Additional services can be offered by TL, if desired.

2. Application

2.1 Acoustics

2.1.1 Naval ships have to maintain certain tactical tasks which normally include the concept of signature of the vessel. The acoustic signature as part of the concept of signature is described in B.3.

2.1.2 Based on the concept of signature requirements for the acoustic signature have to be agreed upon between Naval Authority and shipyard in each individual case.

2.1.3 Depending on the requirements which were agreed upon measures have to be foreseen with the aim to keep the specified noise limits onboard as well as radiated-noise level limits defined for the surrounding environment (sea and air) of t he vessel.

2.1.4 Depending on the characteristic of noise level spectra and the exposure time noise may diminish the crew's and ship's readiness for action e.g. as follows:

- Increasing of detection range of targets
- Reduction of efficiency of the own sonar sensor system
- Reduction of observation of underwater signals and of signals above the sea surface
- Diminution of speech interference level for receiving and giving orders
- Reduction of crew's performance and concentration ability
- Negative influence on the crew's health
- Impairment of the recreation possibilities for the crew in messes, living quarters and cabins

2.2 Vibration

2.2.1 Vibration affect the fulfilment of the ship's tactical tasks in various ways. Typical adverse vibration is:

- Vibration at weapon and sensor foundations originating from the propulsion plant or gun firing
- Vibration at the foundations of electronic devices and equipment mounted at exposed positions, like masts

- Vibration affecting habitability and, in severe cases, the health of the crew

2.2.2 Therefore measures to realize sufficiently low vibration levels to ensure trouble-free operation of the naval ship have to be established.

2.3 Shock

2.3.1 Naval ships are exposed to shock forces created by air or underwater explosions. Under the expression "shock" a very short time, high frequent (in relation to the basic natural frequency of the ship's hull) transmission of kinetic energy to the hull shall be understood. In comparison with an "impact" such a shock is characterized by a much more complex time history.

2.3.2 In the underwater explosion a superheated as bubble under high pressure is created. This gas bubble causes a pressure wave exciting strong low frequency vibration of the hull girder (so called whipping vibration), which even can be magnified due to resonance with the gas bubble contraction and expansion frequency. These Rules cover the case of large distance detonations only, i.e. it is assumed that there is no direct contact between gas bubble and hull.

2.3.3 Shock loads may adversely affect the ship's capability to fulfil its tactical task in various ways:

- destroying main structural elements of the hull due to direct effects of the shock wave
- causing malfunctions of main or auxiliary equipment connected rigidly or elastically to the ship structure
- harming operational capability or health of crew members

B. Acoustics

1. Definitions

1.1 Airborne noise, sound pressure level

The acoustic performance emitted as airborne noise is defined as sound pressure level on a logarithmic scale given by:

$$L = 20\log\left(\frac{p}{p_0}\right) \quad [\mathrm{dB}]$$

p = rms value of the measured sound pressure between 16 Hz and 16 000 Hz

p_0 = reference level

= $2 \cdot 10^{-5}$ Pa

1.2 A-weighted sound pressure level

The A-weighted equivalent continuous sound pressure level is measured by using the frequency weighting "A" as specified in IEC Publication 61672-1: 2002.

1.3 Boom, booming

Booming is a deep, hollow resonant sound, low frequency sound in the frequency range between 16 Hz and 125 Hz and is mainly caused due to one or more discrete tonal components which have significantly greater amplitudes than those of adjacent spectrum levels and are to be felt subjectively annoying. Discrete tonal components are to be frequently measured in airborne noise spectra on board ships but they are not annoying in each case. Booming can only be subjectively detected.

1.4 N-weighted sound pressure level

The N-weighting has to be executed with the Noise Rating Curves (NRC) according to ISO-Standard R 1996-1967. The noise rating number is found by plotting the 1/1 octave band levels via the NRC-curves to which the spectrum is tangent.

1.5 Sonar self noise level

The disturbance level for the ship's own sensor system is depending on the ambient noise and the self noise level of the vessel e.g. structure-borne noise emitted by machinery and other equipment as well as on hydrodynamic effects at the appendages of the hull. Special boundary conditions have to be defined in the building specification.

1.6 Steady noise with audible discrete tones

This type of noise has components at one or more discrete frequencies which have significantly greater

amplitudes than those of adjacent spectrum level. Audible discrete tonal components of noise (tonality and/or booming) can occur in the whole audible frequency range between 16 Hz and 16 000 Hz.

1.7 Steady noise without audible discrete tones

When the level fluctuations of the indicating pointer or the display on the sound level meter are equal or less than ± 3 decibels. This type of noise is frequently referred as "broad-band" noise. Obvious tonal components of noise (tonality and/or booming) in the whole audible frequency range between 16 Hz and 16 000 Hz are absent or negligibly small.

1.8 Speech interference level

To judge an airborne sound spectrum in relation to speech clarity, the speech interference level (SIL) is to be determined by forming the arithmetic average of the 1/1 octave band level of the frequencies at 500, 1 000, 2 000 and 4 000 Hz. Then the limit value is defined by the following formula:

$$SIL = \frac{1}{4} \cdot \left(L_{oct500} + L_{oct1000} + L_{oct2000} + L_{oct4000} \right) \left[dB \right]$$

L_{oct} = 1/1 octave bend level [dB]

1.9 Vibration velocity level (structure-borne noise)

The structure-borne noise in a structure or on its surface is created by oscillating excitation forces transmitted to the structure. The structure-borne noise is defined as vibration velocity level as follows:

$$L = 20 \log \left(\frac{v}{v_0} \right) \left[dB \right]$$

v = rms value of the measured vibration velocity between 10 Hz and 16 000 Hz

v_0 = reference velocity

= 10^{-9} m/s acc. to ISO 1683-1983

1.10 Vibration acceleration level (structure - borne noise

The structure-borne noise is measured as vibration acceleration level as follows:

$$L = 20 \log \left(\frac{a}{a_0} \right) \left[dB \right]$$

a = rms value of the measured vibration acceleration between 10 Hz and 16 000 Hz

a_0 = reference acceleration

= 10^{-6} m/s^2 acc. to ISO 1683-1983

1.11 Underwater noise

Underwater noise is defined as a sound pressure level:

$$L = 20 \cdot \log \left(\frac{p_w}{p_{w0}} \right) \left[dB \right]$$

p_w = rms value of the measured underwater sound pressure between 1 Hz and 16 000 Hz

p_{w0} = reference pressure

= 10^{-6} Pa (1 μPa) (international)

1.12 Radiated-noise

Here: Noise radiated into the water by a naval surface ship. The radiated-noise can be used by passive listening sonar to detect the presence of a vehicle at a considerable distance. The radiated-noise level limit curves mainly depend on the underwater noise measuring range (shallow or deep water), corresponding operational conditions of the vessel and conversion procedures to 1Hz bandwidth and / or 1m etc. The radiated-noise limits have to be agreed on in detail between Naval Authority and shipyard for the individual vessel. In these Rules the radiated-noise level has to be given and to be measured as third-octave band levels, re 1μPa.

1.13 Concept of signatures

All relevant single signatures which can be caused by

the system ship are collected in the concept of signatures of the vessel. In general, single signatures are not independent from each other.

1.14 Single signature

A single signature of a vessel describes the behaviour of the vessel specifically related to physical subjects, e.g. radar, optic, acoustic, magnetic etc.

1.15 Acoustic signature

Noise requirements e.g. airborne noise, structure-borne noise and radiated-noise level limit curves, corresponding operating conditions etc. as well as for the sonar system are to be collected and defined in the "acoustic signature" of the vessel. In general, single noise limit values, see 3. are not independent from each other, see also A. 1.1.

1.16 Mechanical ventilation

Air supply and exhaust systems are to be foreseen for engine rooms, stores, workshops, technical rooms, etc.

1.17 HVAC-systems

Heating, venting and air-conditioning systems are to be foreseen for accommodation and work spaces of the crew and officers.

1.18 SAT: Sea acceptance trials

1.19 FAT: Factory acceptance tests

1.20 HAT: Harbour acceptance tests

2. Applicable standards

2.1 For the definition of basic principles of acoustic procedures and measurements, as well as details of the devices and methods, it is necessary to rely on well proven national and international standards. Unless a particular standard edition is referred to explicitly, the latest edition of the following standards is to be applied:

2.2 International standards

- ISO 2923, "Acoustics - Measurement of Noise on Board Vessels"
- ISO 31/VII, "Quantities and units of acoustics"
- DIN EN 61 260, "Octave, half-octave and third-octave band filters intended for the analyses of sound and vibration"
- DIN EN 60 804, "Integrating/averaging sound level meters"
- DIN EN 60 942 (IEC 60 942 : 2003), "Sound calibrators"
- ISO 717/1, "Acoustics - Rating of sound insulation in buildings and of building elements -Part 1: Airborne sound insulation in buildings and interior elements"
- ISO 717/2, "Acoustics - Rating of sound insulation in buildings and of building elements -Part 2: Impact sound insulation"
- ISO 140/4, "Acoustic - Measurement of sound insulation in buildings and of building elements
- Part 4: Field measurements of airborne sound insulation between rooms"
- ISO 140/7, "Acoustics - Measurements of sound insulation in buildings and of building elements - Part 7: Field measurements of impact sound insulations of floors"
- ISO 1996, "Acoustics - Description and measurement of environmental noise, Part 1 - 3"
- ISO 1999, "Acoustics - Determination of exceptional noise exposure and estimation of noise-induced hearing impairment"
- E DIN 45681, "Detection of tonal components of noise and determination of a tone adjustment for the assessment of noise emission"

2.3 Additional standards and regulations defined by the Naval Authority

Other standards and regulations to be included in each individual case on demand of the Naval Authority shall be discussed and mutually agreed upon with the shipyard and TL.

3. Acoustic signatures

3.1 General

Table 16.1 summarises the qualitative acoustic criteria on naval ships concerning the sound components:

- Structure-borne noise
- Airborne noise
- Radiated-noise

3.2 Permissible sound pressure levels for accommodation and work spaces of the crew

3.2.1 The values of the permissible sound pressure and speech interference levels have to be defined by the Naval Authority for each individual building program. If this is not possible because of certain circumstances the values given in Table 16.2 may be used.

For mechanical ventilation systems the noise limits to be applied to air intake/exhaust openings are defined in Chapter 107 - Ship Operation Installations and Auxiliary Systems, Section 11, G.3.1.

3.2.2 Special regulations

3.2.2.1 If relevant noise sources are operating only up to 4 hours within 24 hours, the permissible sound pressure limit in dB(A) according to Table 16.2 can be increased by 5 dB. Excepted from this regulation are item nos. 1.1, 1.2, 1.3, 3.2 and 3.4 shown in Table 16.2.

3.2.2.2 If relevant noise sources are operating only up to 10 minutes within 24 hours, the permissible sound pressure limit in dB(A) according to Table 16.2 can be increased by 10 dB. Excepted from this regulation are item nos. 1.1, 1.2, 1.3, 3.2, 3.4, 4.1, 4.2nd 4.5 shown in Table 16.2.

3.2.2.3 Sound limit values concerning sound and impact insulation in the accommodation and work spaces of the crew are to be agreed upon Naval Authority, shipyard and TL for the individual vessel. Measurements shall be conducted according to ISO 717/1 and ISO 140/4 as well as ISO 717/2 and ISO 140/7.

3.2.3 Noise abatement measures

3.2.3.1 With the aim to maintain the noise limit values specified suitable noise abatement measures are to be installed in relevant accommodation and work spaces of the crew.

3.2.3.2 Permissible airborne and structure-borne noise limit curves are to be defined for relevant machinery for onboard situations and test bed foundations of suppliers. The noise limit curves can be used as criteria to judge the acoustic quality of shipboard equipment and effectiveness of noise reduction measures. FAT should be contractually agreed on.

Table 16.1 Acoustic criteria for naval ships

Type of noise	Noise level	Frequency composition	Duration of action
Structure-borne noise:	The levels are to be kept low to avoid impermissible noise aboard and to avoid that via excitation of the ship's structure and shell an impermissible radiated-noise occurs.	Discrete tones are to be avoided (e.g. tones caused by unbalanced masses, working frequencies), because they are significant in radiated-noise and may lead to an identification of the ship by the enemy.	Short time noise events (impacts, stopping hits, hydraulic impulses) are to be avoided, because of its remarkable characteristics in the radiated-noise.
Airborne noise:	The noise level is to be kept low, to avoid health damage to the crew's hearing and other organs, as well as to avoid early tiring and prolonged reaction times. In addition speech identification and recreation of the crew in the living quarters should be ensured. Finally the contribution to the emission of radiated-noise shall be reduced.	Tones should not be included, because discrete tones may shift the limit of annoyance to lower levels. Discrete tones may have a spectral line effect in the radiated-noise. Booming effects have to be avoided.	With increasing exposure time of noise, the danger of health damage to the hearing of the crew is also increasing.
Radiated-noise:	High levels have to be avoided, because they would limit the effectiveness of the ship's own sonar sensors. In addition the detection range of targets will be increased.	Discrete tones are to be avoided, because spectral lines e.g. can be used for identification and detection of the ship. In addition discrete tones in the frequency range of the own sonar may be disturbing.	Impact and short time emissions of noise have to be avoided, because they get a higher degree of attention for the enemy sonar systems and disturb the own sonar system.

Table 16.2 Proposal for permissible sound pressure and speech interference levels for crew accommodation and work spaces

No.	Spaces / Working place on deck	Limit values in [dB] (4)								
		At anchor with own energy supply			Combat cruising speed/ Special operation cond. (1)			Maximum continuous speed v_0		
		dB(A)	NRC	SIL	dB(A)	NRC	SIL	dB(A)	NRC	SIL
1.	**Working spaces**									
1.1	Unmanned main & auxiliary engine rooms, control stations therein	110 **(2, 5)**	105 **(2, 5)**	—	110 **(2, 5)**	105 **(2, 5)**	—	110 **(2, 5)**	105 **(2, 5)**	—
1.2	Engine control rooms	—	—	—	80	75	73	80	75	73
1.3	Mechanical workshops	85	80	78	85	80	78	95 2	90	—
1.4	Electronical workshops	65	60	58	70	65	63	—	—	—
1.5	Equipment spaces/unmanned	—	—	—	85	80	—	85	80	—
2.	**Service Spaces**									
2.1	Galleys and pantries	70	65	—	70	65	—	—	—	—
3.	**Control stations**									
3.1	Bridge and chart room	—	—	—	65	60	58	65	60	58
3.2	Manned combat information center (CIC)	—	—	—	60	55	53	65	55	53
3.3	Operation control auxiliary rooms/unmanned	—	—	—	70	65	—	70	65	—
3.4	Rooms for navigation, telecommunication and sensor equipment/unmanned	—	—	—	75	70	—	75	70	—
3.5	Computer spaces/manned	—	—	—	65	60	58	65	60	58
4.	**Accommodation**									
4.1	Officer cabins	50	45	—	60	55	—	—	—	—
4.2	Living quarters for petty officers and crew	60	55	—	60	55	—	—	—	—
4.3	Mess rooms	55	50	48	65	60	58	—	—	—
4.4	Offices	60	55	—	65	60	—	—	—	—
4.5	Hospital	50	45	43	60	55	53	—	—	—
5.	**Outdoor Spaces**									
5.1	Working places on deck	—	80 **(3)**	78**(3)**	—	80**(3)**	78**(3)**	—	—	—
5.2	Open bridge/bridge wings	—	65 **(6)**	—	—	70**(3)**	68**(3)**	—	75**(3)**	73**(3)**

(1) *Special operating conditions are e.g. mine hunting, mine sweeping, etc.*
(2) *Not to be exceeded at any place where operational actions are executed.*
(3) *Noise created by wind and waves is not considered.*
(4) *Environmental conditions: wind < 4 Beaufort, continuous wind/sea state.*
(5) *If very low values for radiated-noise are requested, these values have to be reduced.*
(6) *The NR-Curve has to be maintained for 1/1 octave band levels mainly between 250 Hz to 8 000 Hz*

3.2.4 Tolerances (airborne noise)

The following aspects have to be considered:

- Based on sound pressure levels which have been taken in each accommodation space respectively each cabin of the crew the power averaged sound pressure level has to be calculated for each individual deck. These average levels shall not exceed the noise limits as specified in Table 16.2 for individual spaces.

- The noise limits specified for the accommodation of the crew and officers (Table 16.2, item nos. 4.1, 4.2) may be exceeded by maximum 5 dB(A). After comparing the measured 1/1 octave band sound pressure spectra with the corresponding NR-curve, TL will decide whether the exceeding of the noise limit may still be accepted. The maximum number of exceeding is limited to ten (10) for the whole naval ship.

- Other limit values as stated in Table 16.2 may be exceeded by maximum 3 dB(A) - except item nos. 1.1, 1.2, 1.3, 3.1, 3.2, 4.3, 4.4, 5.2. After comparing the measured 1/1 octave band sound pressure spectra with the corresponding NR-curve, TL will decide whether the exceeding and the total number of exceeding of the noise limits may still be accepted.

3.3 Permissible radiated-noise

3.3.1 Radiated-noise limit curves have to be defined for different operating conditions. These limit curves and boundary conditions are normally included in the confidential part of the building specification.

3.3.2 Based on the radiated-noise limit curves structure-borne noise limit curves should be estimated by the shipyard for the wetted shell structure and foundations of relevant shipboard equipment. In the next step structure-borne noise limit curves should be computed for each relevant noise sources for onboard situations and test bed foundations of suppliers.

3.3.3 At the end of the definition and detailed design phase of the ship the computed values for radiated-noise and applied methods have to be presented by the shipyard. The shipyard has to explain the procedure and estimations made to ensure that the radiated-noise limit curves are met.

3.4 Permissible sonar self noise

If the naval ship is equipped with an active or passive sonar sensor system, limit curves for the permissible sonar self noise level are to be defined by the Naval Authority and included in the confidential part of the building specification.

4. Noise measurements

4.1 General

4.1.1 Aim of measurements

The aim of noise measurements are to ensure that the specified acoustic signatures can be maintained. Special tasks have to be agreed on between Naval Authority, shipyard and TL.

Measurements and their evaluation will be organised and executed by the shipyard or carried out by experienced engineers employed by a specialized sub-contractor, which has to be accepted by TL. TL will survey the whole measurement procedure. If desired by the Naval Authority or the shipyard, TL can participate in measurements and their evaluation with own experts.

4.1.2 Treatment of ship series, conversions

In a series of ships of the same family/class the required noise measurements have to be conducted for the first ship of the series. The measurement program can be reduced for each further vessel of the series if the program has been agreed upon between Naval Authority and shipyard.

After modifications/conversions influencing the noise situation of the vessel TL will decide which measurements have to be repeated.

4.1.3 Noise Survey Program

4.1.3.1 Establishment of the program

The shipyard has to establish the complete Noise Survey Program according to Technical-Tactical Requirements (TTF). The Program has to be agreed on with the Naval Authority and TL. The main parts of the Noise Survey Program are normally already included in the confidential part of the building specification.

4.1.3.2 Parts of the program

The program will normally consist of the following parts:

4.1.3.2.1 Airborne and structure-borne noise measurements are to be conducted at relevant noise sources in the test field of the manufacturer or sub-contractor (FAT).

4.1.3.2.2 Airborne and structure-borne noise measurements are to be conducted at relevant noise sources aboard the ship e.g. during SAT and HAT.

4.1.3.2.3 Radiated-noise measurements are to be conducted according to the building specification.

4.1.3.2.4 Noise measurements are to be conducted to evaluate the sonar's self noise level, if applicable.

4.1.3.3 Detailed information

The Noise Survey Program shall contain all relevant data, drawings, noise limit curves, measurement protocol sheets, etc. necessary to conduct the measurements in a straight forward manner. It has to be ensured that all relevant structure-borne and airborne noise sources are indicated in the drawings (including air intake and outlet openings of mechanical ventilation and HVAC-systems). The final edition of thermal, fire and noise protection insulation drawings, data about the materials etc. are to be submitted.

A switch list, which contains exactly the operation condition of all relevant noise sources (on/off, rpm and/or performance, relevant excitation frequencies, etc.), has to be established for each measurement set.

4.1.3.4 The Noise Survey Program shall contain drawings showing all measuring positions with corresponding reference numbers as planned by the ship- yard. Noise measurement protocol sheets are to be prepared for each measurement set.

4.1.3.5 The Noise Survey Program has to be based on the final design stage of the ship and shall be presented in form of a document to TL. The complete Program has to be submitted at least three months prior to each acoustic acceptance test.

4.2 Measurement conditions

4.2.1 Environmental conditions for SAT

Following environmental conditions have to be considered if no other definitions are agreed on in the building specification:

- Wind speed less than 4 Bft
- Sea state less than 3 (significant wave height approx. 1,25 m)
- Constant wind/wave conditions
- The minimum water depth depends mainly on the ship's speed and the test program.

4.2.2 Operational test conditions

If no requirements are agreed on in the building specification, the following recommendations should be observed:

4.2.2.1 Measurements on board the ship (SAT, HAT)

- ship in the status of the displacement ready for combat (SAT, HAT)
- The course of the ship shall be as straight as possible. Minimum rudder movement is imperative. Rudder angle shall not exceed ± 5 degrees (SAT).

- In general, doors and windows are to be closed (SAT, HAT).

- Operating condition of all relevant noise sources according to the switch list for each measurement set, defined in 4.1.3.3 (SAT, HAT)

- Unnecessary human activities have to be avoided (SAT, HAT).

4.2.2.2 Radiated-noise measurements

The noise measurement range, measurement conditions as well as the test condition for each test run of the ship have to be agreed upon between Naval Authority, shipyard and TL.

4.2.2.3 Sonar tests

These aspects are to be treated as confidential and should be discussed between shipyard, Naval Authority and TL case by case.

4.2.3 Reproduction of results

The operational and environmental conditions shall be chosen according to the measurement program in such a way, that they can be reproduced for measurements to be repeated with sufficient accuracy.

4.3 Measurement instrumentation

4.3.1 Airborne noise

The instrumentation for measurement is to be chosen depending on the scope and accuracy defined in the Noise Survey Program according to 4.1.3.3. The following aspects on instrumentation have to be considered.

4.3.1.1 Integrating-averaging sound level meters are to be applied and should be able to store the measured data in the memory of the instrument.

4.3.1.2 The instrumentation including microphone, cables and recording devices, etc. shall meet the requirements for type 1 instrument specified in DIN EN 60804.

4.3.1.3 Each microphone shall be calibrated to have an essentially flat frequency response in a diffuse sound field.

4.3.1.4 A wind screen shall be used for indoor and outdoor measurements.

4.3.1.5 The wind screen shall not effect the measured A-weighted sound pressure level by more than
0,5 dB when there is no wind or in case the wind screen shall be used for indoor measurements.

4.3.1.6 1/1 octave and third-octave filters shall comply with the requirements of DIN EN 61260.

4.3.1.7 Class 1 sound calibrators shall be used and comply with the requirements of DIN EN 60942 (IEC 60942: 2003).

4.3.1.8 Compliance verification of measuring instrumentation has to be done as follows:

- The compliance of the integrating-averaging sound level meter with the requirements of DIN EN 60 804 has to be verified by the manufacturer or other authorised organisation at least every two years.

- The compliance of the sound calibrator with the requirements of DIN EN 60942 (IEC 60942: 2003) has to be verified by the manufacturer or other authorised organisation at least every two years.

- The date of the last verification and confirmation of the compliance with the relevant standard is to be recorded to TL.

4.3.1.9 An instrument suitable to store the time signal shall be available, in case that subjectively annoying low frequency noise (booming) or obvious tonal components (time records to be stored) occur.

4.3.2 Underwater noise

The instrumentation for underwater noise measurements has to be specially agreed.

4.3.3 Structure-borne noise

The instrumentation for underwater noise measurements has to be specially agreed.

4.4 Measurement procedure

4.4.1 Airborne noise measurements

4.4.1.1 Measurements in the accommodation and work spaces of the crew

If no particulars are agreed on in the building specification, the following procedures shall be applied:

4.4.1.1.1 Condition of spaces

- Measurements shall be conducted with closed doors, windows and hatches, etc.
- All spaces and rooms shall be fully equipped. The furniture shall be completely installed.
- Mechanical ventilation and air conditioning equipment shall be in normal operation (capacity to be in accordance with the design condition). All air conditioning systems shall be adjusted prior to measurements.
- For each measurement set all devices are in operation according to the switch list as defined in 4.1.3.3.

4.4.1.1.2 Measurement locations

- Height above floor of approx. 1,2 m
- At least 0,5 m away from reflecting surfaces (bulkheads, walls, ceilings, etc.)
- Distance to next position of microphone approx. 2,0 m, if possible
- Distance to measuring expert at least 0,5 m at the bridge wing lee side preferable
- In engine rooms with a height of several decks: at every deck approx. 1,2 m above floor
- At any work space measurements shall be carried out at the operator's ear position.
- In crew and officer cabins one measurement shall be taken in the centre of the room and one additional measurement shall be carried out at the head of the berth with the highest noise level.

4.4.1.1.3 Measuring conditions

- The equivalent continuous A-weighted sound pressure level in dB(A) shall be measured. The sound level instrumentation shall be set to "fast" response. The measuring time shall be at least 15 seconds.
- During each measurement, the microphone shall be slowly moved horizontally and/or vertically over a distance of approx. ± 0,5 m, if possible.

4.4.1.1.4 Evaluation of results

The measured values are to be rounded. For example:

- 56,2 dB(A) rounded to 56,0 dB(A)
- 56,3 dB(A) rounded to 56,5 dB(A)
- 56,7 dB(A) rounded to 56,5 dB(A)
- 56,8 dB(A) rounded to 57,0 dB(A)

4.4.1.2 FAT-Airborne noise measurements

4.4.1.2.1 Acoustic environment

The test field shall meet the following conditions:

- The influence of sound reflection and absorbing on walls and the ceiling of the test room has to be corrected e.g. acc. to DIN 45635.
- Any influence of air flows on the measurements has to be avoided (a wind screen or wind ball to be used).
- The influence of disturbing sound which may be created in environs of the test field shall be

investigated. Such noise shall be at least 8 dB lower than the expected sound of equipment investigated. If this is not possible, relevant corrections are to be introduced. Such background noise measurements are to be conducted before and after each measurement set.

4.4.1.2.2 Measurement area

Depending on the location and type of machinery the measurement method and standard to be applied have to be agreed with TL.

4.4.1.2.3 Measuring conditions

- For main noise sources, like propulsion machinery, gears, generator sets, every unit of a series has to be tested.

- Other series of equipment may be tested with the first unit only.

- The equivalent continuous A-weighted sound pressure level in dB(A) shall be measured. The sound level instrumentation shall be set to "fast" response. The measuring time shall be at least 15 seconds.

- The microphone shall not be situated close to input and output openings of mechanical ventilation and exhaust gas openings.

- For better judgment of noise behaviour third-octave band spectra (16 Hz- 10 kHz) and a narrow band analysis shall be conducted.

- If the overall sound pressure level is fluctuating by more than ± 5 dB(A), the minimum and maximum overall sound pressure levels are to be measured and reported additionally.

4.4.1.2.4 Evaluation of results

- The measured values are to be rounded as de-scribed in 4.4.1.1.4.

- The power averaged sound pressure level is to be calculated based on all measurement positions taken at the enveloping surface of each unit.

4.4.2 Structure-borne noise measurements

4.4.2.1 General requirements

4.4.2.1.1 For evaluation of the influence of the radiated-noise, structure-borne noise measurements shall be conducted at relevant noise sources (e.g. foundations, shell plating etc.). For such measurements requirements shall be observed for establishing comparable results as follows:

4.4.2.1.2 It is recommended to use measuring equipment which is suitable to evaluate the results immediately after the measurements. Thus it will be possible to decide quickly if repeated or additional measurements become necessary.

4.4.2.1.3 The measurement equipment has to be calibrated before and after each measurement set.

4.4.2.2 FAT-Structure-borne noise measurements

4.4.2.2.1 Test bed foundation

Machinery and equipment shall be mounted on their original vibration isolators which will be used on board. The foundation of the test field should be provided as follows (starting with the best solution):

- same foundation as on board

- A resiliently mounted concrete foundation (vertical tuning frequency < 5 Hz) may be used as test bed floor.

- standard test field foundation consisting of a double T-girder (e.g. IPB1 of DIN 1025) with stiffening brackets below the fixing points of the vibration isolator of unit

However, the driving-point admittance shall be measured for each test bed foundation at least in the frequency range of approx. 50 to 2000 Hz. Single measurement points are to be chosen below each vibration isolator of the unit. The power average driving-point admittance shall be calculated. All results shall be reported.

4.4.2.2.2 Measuring positions

See 4.4.2.3.2.

4.4.2.2.3 Measuring conditions

See 4.4.2.3.3

4.4.2.2.4 Evaluation of results

- Comparison of the results with the predefined, frequency depending limit curves for the test bed

- Remarks on special influences and boundary conditions, etc.

- The result of the FAT shall be presented in a measurement report.

4.4.2.3 SAT-Structure-borne noise measurements

4.4.2.3.1 Situation on board

- For each measurement the influence of disturbing noise which may be created in the environs of the machinery to be investigated shall be considered. Such noise should be at least 8 dB lower than the expected structure-borne noise limit of the unit to be investigated.

- Background noise measurements are to be conducted before and after each measurement set. If necessary, the structure-borne noise levels measured are to be corrected.

- For measurements to be taken at the shell plating, the wind speed shall be less than or equal 4 Bft and sea state less than or equal 3.

- Rudder movements are to be limited to maximum rudder angles of ± 5°.

- Water depth is to be correlated with the ship's speed.

4.4.2.3.2 Measuring positions

- Structure-borne noise measurements shall be conducted at each relevant noise source. The list of noise sources is to be prepared by the shipyard and shall be submitted and discussed with TL.

- Based on the list of noise sources the number and location of measurement points shall be agreed on with TL in detail for each relevant unit. The agreement should be taken during an early state of the design.

4.4.2.3.3 Measurement conditions

- To be agreed in detail with the shipyard

4.4.2.3.4 Evaluation of results

- The power averaged structure-borne noise level shall be calculated based on all measurement positions taken below the vibration isolators at the ship foundation of each relevant unit. Minimum and maximum levels shall be plotted too.

- The power averaged structure-borne noise levels are to be compared with the noise limit curves and/or for further evaluations.

- All results shall be presented in a measurement report.

4.4.3 Radiated-noise measurements

4.4.3.1 General requirements

4.4.3.1.1 The frequency depending limit curves for the permissible radiated-noise of the ship may be defined normally by the Naval Authority. The limit curves are to be defined as third-octave band level, re 1μPa. These levels are related to a certain depth of the water and to a certain distance from the ship.

4.4.3.1.2 Radiated-noise measurements are to be conducted as follows:

- The ship is to be kept stationary over the noise measurement range for shallow and/or deep water condition. Each relevant noise source shall be operated according the switch list, defined for each measurement task. The radiated-noise shall be measured as third-octave band levels, re 1μPa.

- The ship is moving over the measurement noise range. The procedure shall be repeated for different ship speeds as agreed on in the building specification. The machinery are to be operating according the switch list, defined for each measurement task. The radiated-noise shall be measured as third-octave band levels, re 1μPa.

4.4.3.1.3 For operating conditions of the ship which are to be expected as critical or when the Naval Authority adhere strictly to keep defined radiated-noise limits the measurements shall be repeated at least three times.

4.4.3.1.4 Narrow band analysis

Measurements and evaluation of results have to be agreed on case by case. The scope of work shall be executed by institutions specialized in this field.

4.4.3.1.5 Evaluation of the results

The work shall be executed by institutions specialized in this field. The measurement results shall be compared with specified acoustic signatures. All results shall be presented in measurement reports.

4.4.3.2 Measurement noise range

The Naval Authority has to decide which measurement noise range shall be chosen for the vessel e.g. shallow and/or deep water condition. All radiated-noise measurements shall be conducted by institutions specialized in this field.

4.5 Noise Survey Report

4.5.1 All Noise Survey Reports are based on the Noise Survey Program prior approved by TL.

4.5.2 The Noise Survey Report contains all final results of each noise measurement and discussion of the results. In case acoustic signatures are not fulfilled causes therefore and proposals for improvement have to be given.

4.5.3 The Noise Survey Report shall be presented in form of a document and shall contain the following sections for each operation mode investigated:

- Designation of tests
- Environmental conditions
- Operational conditions
- Measurement instrumentation
- Summary of the main measurement results
- Discussion of results
- Proposals for improvement, if necessary
- Conclusion of the acceptance tests if all tests are finished
- Attachments e.g. all measured data in detail, reading sheets, drawings, etc.

C. Vibration

1. General

In the following the influence of vibration on the habitability of the crew as well as the effect of vibration on hull structures, electronic devices, main/ auxiliary machinery and equipment is given.

2. Applicable standards

2.1 For the definition of basic principles of vibration calculation, assessment and measurement procedures it is referred to well proven standards. Unless a particular edition of a standard is defined, the latest edition of the respective standard shall be applied.

If these Rules contain procedures deviating from the relevant standards, these Rules have priority.

2.2 International standards

- ISO 6954: 2000 (E), "Mechanical vibration - Guidelines for the measurement, reporting and evaluation of vibration with regard to habitability on passenger and merchant ships"

- ISO 2631-1: 1997 (E), "Mechanical vibration and shock - Evaluation of human exposure to whole-body vibration - Part 1: General requirements"

- ISO 2631-2: 1989 (E), "Mechanical vibration and shock - Evaluation of human exposure to whole-body vibration - Part 2: Continuous and shock induced vibration in buildings (1-80 Hz)"

- ISO 4867: 1984 (E), "Code for the measurement and reporting of shipboard vibration data"

- ISO 4868: 1984 (E), "Code for the measurement and reporting of local vibration data of ship structures and equipment"

- ISO 8041: 1990 (E), "Human response to vibration - Measuring instrumentation"

3. Habitability

3.1 If the Naval Authority does not request specific maximum vibration levels, the levels of Table 16.3 are recommended.

The limit values in Table 16.3 refer to ISO 6954, edition 2000. Consequently the limit values are defined as overall frequency weighted root mean square (rms) values in the frequency range 1 to 80 Hz.

3.2 Requirements are to be defined mainly for the following operating conditions:

- Maximum continuous ahead speed v_0, see Section 1,B.7.1

- Economic, continuous ahead cruising speed v_M, see Section 1, B.7.3

3.3. Vibration verification by measurements

3.3.1 General

The measurements and the evaluation of their results shall be carried out only by experienced personnel **(1)**.

(1) *TL may be entrusted with carrying out measurements and evaluations within the marine advisory services.*

3.3.2 Conditions for measurements

The operating conditions of the naval ship, like operating time, revolutions per minute and rated driving power P of the propulsion machinery, ship's speed, etc. shall be verified during the measurement procedure. During the measurements the following conditions have to be observed:

- The loading case shall be typical for normal operation

- Shallow water effects have to be excluded by calculating the Depth Froude Number for each individual ship and by choosing the test area accordingly

- A sea state 3 and significant wave height of approx. 1,25 m shall not be exceeded

- 4 Bft wind speed shall not be exceeded

- The course of the ship shall be as straight as possible, minimum rudder movement is imperative and the rudder angles shall not exceed ± 2 degrees

3.3.3 Measurement instrumentation

The instrumentation has to be specially agreed by TL and shall fulfil the following conditions:

- The instrumentation shall comply with the requirements of ISO 8041

- A calculation of the weighted rms value in terms of vibration velocity according to ISO 6954 must be possible

- Provision shall be made for the storage of all spectra and a limited number of time records

- For non-magnetic floors three-legged plates with a minimum weight of 1 500 g shall be available for carrying the measuring sensors

- The equipment shall be calibrated at periodic intervals of not more than two years,

calibration sheets shall be presented before the measurements

3.3.4 Measurement procedure

3.3.4.1 If no other agreements are made, the following principles shall be applied:

- The standards ISO 4867 and 4868 have to be observed
- Measurement positions for assessing longitudinal and transverse vibration shall be chosen in a way that the measurement results reflect the global level
- Measurement positions for assessing vertical vibration shall include at least all accommodation, recreation and working areas
- The velocity spectrum achieved by a Fast Four-rier Transformation (FFT) of the measured time series shall generally be made available i.e. dur-ing sea trials; the spectrum shall be stored

3.3.4.2 To ensure comparability of the spectra, the following parameters shall be applied for data acquisition and signal processing:

- Measuring time per point: ≥ 1 min
- Sampling rate: ≥ 300 l/s
- Spectral frequency range: 1-80 Hz
- Minimum spectral resolution: 0,2 Hz
- FFT window function: flat top
  (if not available: Hanning window)
- FFT averaging mode: linear averaging (stable mean)

3.3.4.3 The results shall be presented as weighted rms values in terms of vibration velocity.

4. Vibration induced fatigue of hull structures

4.1 Design principles

Excessive vibration may damage the ship's structure. Therefore, it has to be ensured that local structures are not vibrating in resonance with a main excitation frequency created by the propeller or other machinery. This can be realised by designing structures with sufficiently high natural frequencies.

4.2 Severity of effects of strong vibration

Severity of the effects of strong vibration depends on multiple influence factors: material, detail design, welding process, environmental conditions, etc. As a rough guideline for assessment of vibration severity with regard to structural damage the diagram Fig. 16.1 can be used. The diagram is valid for steel structures and refers to peak values of maximum single frequency components of the measured response spectrum. For aluminium structures the values shall be multiplied by a factor of 0,4.

5. Vibration of mast mounted electronic equipment

5.1 Vibration may affect the operation of electronic instruments installed on masts. Vibration is mainly excited by the seaway and the propulsion system. In any case the electronic equipment shall withstand vibration loads without limitation of its intended purpose.

5.2 For any electronic equipment which is relevant for safety, functionality or fulfilment of the ship's tactical purpose safety towards vibration must be demonstrated by suitable procedures. That may be:

- Type tests using shaking devices simulating vibration loads on navy ships
- Proof of successful applications in comparable conditions
- Theoretical investigations

Requirements regarding proof of safety towards vi-bration by type testing are defined in Chapter 105 - Electrical Installations, Section 1, Table 1.3.

Table 16.3 Proposal for maximum vibration levels
(overall frequency weighted rms value in frequency range 1-80 Hz)

Space category / Space	Limits of vibration level [mm/s]	
	At cruising speed v_M	At maximum continuous speed v_0
Working spaces		
Unmanned main and auxiliary machinery spaces	5,0	6,0
Mechanical workshops	4,0	5,0
Electronic workshops	3,0	4,5
Galley range	3,5	4,5
Control stations		
Navigation bridge and chartroom	3,0	3,5
Manned combat information centre (CIC) Manned flight control centre (FCC)	2,5	3,5
Manned machinery control centre (MCC) Manned damage control centre (DCC)	3,0	3,5
Accommodation		
Officer cabins	2,5	4,0
Petty officer and crew cabins	3,0	4,5
Messes	3,0	4,5
Offices	3,0	4,5
Hospitals	2,5	3,5
Outdoor spaces		
Working areas	4,0	5,0
Recreation areas	3,5	4,5

5.3 Masts and mast modules shall be constructed in such a way that no resonance of basic vibration modes with relevant excitation frequencies is present. This should be verified during design stage by theoretical investigations **(2)**.

5.4 The mast itself as well as its support should be designed as stiff as possible. Support on longitudinal and transverse walls is advantageous. Sufficient shear stiffness shall be provided for the mast construction.

5.5 The overall rms vibration-level in the frequency range 1 to 80 Hz should not exceed 15 mm/s at mast locations intended for installation of electronic equipment in any direction.

6. Vibration of main/auxiliary machinery and equipment

6.1 Vibration may damage machinery or equipment. Vibration can be self-excited, as in the case of propulsion machinery, or is caused by excitation originating from the foundation. In any case machinery and equipment shall withstand vibration loads without loss of intended function.

6.2 Vibration limit values regarding reciprocating main engines and auxiliary machinery are defined in Chapter 104 - Propulsion Plants, Section 1, D.2.

(2) *TL may be entrusted with carrying out investigations within the marine advisory services.*

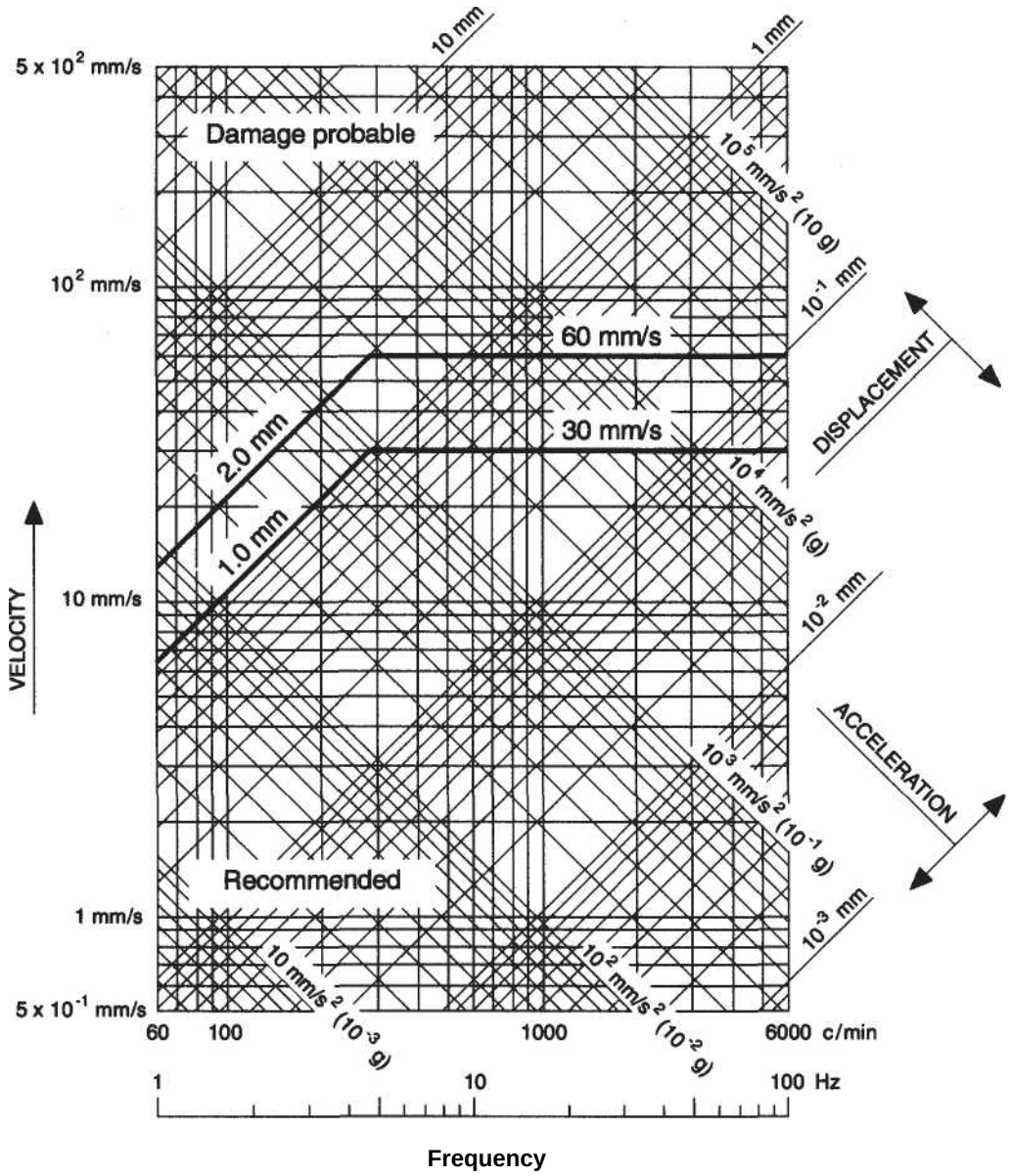

Fig. 16.1 Guideline for vibration severity with regard to structural damage

6.3 For any machinery/equipment which is relevant for safety, functionality or fulfilment of the ship's tactical purpose, safety towards vibration must be demonstrated by suitable procedures, that may be

- Type tests using shaking devices simulating vibration loads on navy ships
- Proof of successful applications in comparable conditions
- Theoretical investigations

6.4 Type tests as well as theoretical calculations must provide the natural frequencies of the main basic vibration modes of the respective machinery/equipment. Elements connecting the device and its foundation must be considered during tests as well as calculations. The lowest natural frequency obtained is defined as the critical machinery/equipment natural frequency: f_{Device}.

6.5 In order to reduce vibration transferred from ship structure into machinery/equipment or vice versa resilient mounting should be provided.

6.6 If any machinery/equipment is mounted resiliently sufficient space for motions caused by seaway, heeling or shock loads must be provided. If two machinery/equipment items are placed next to each other opposite-phase motion must be considered too.

6.7 The design frequency of resilient supports must be compared to the main excitation frequencies which occur on the individual ship. The properties of the mounting elements must be chosen in such a way that the safety margin between those frequencies is sufficient, i.e.

$$f_{Design} < 0{,}80 \cdot f_{Blade\ Propeller} \quad [Hz]$$

f_{Design} = natural frequency of resilient mounting which is determined from element type, number of elements and shore hardness [Hz]

$f_{BladePropeller}$ = propeller blade passage frequency at rpm corresponding cruising speed v_M [Hz]

6.8 In order to avoid vibration excitation from propeller shafting and hull girder vibration caused by seaway excitation the following criteria should be observed:

$$f_{Design} > 1{,}20 \cdot f_{Propeller\ Shaft} \quad [Hz]$$

$$f_{Design} > 1{,}20 \cdot f_{Natural\ Hull\ Vibration} \quad [Hz]$$

$f_{Propeller\ Shaft}$ = propeller shaft rotation speed at rpm corresponding maximum speed v_0 [Hz]

$f_{Natural\ Hull\ Vibration}$ = natural frequency of basic hull girder vibration mode [Hz]

6.9 To avoid coupling of elastic vibration of the machinery/equipment or parts of it with rigid body vibration on its resilient support the following criteria should be observed:

$$f_{Device} > 3{,}0 \cdot f_{Design} \quad [Hz]$$

6.10 For any resiliently mounted machinery/ equipment which is relevant for safety, functionality or fulfilment of the ship's tactical purpose it must be demonstrated by suitable procedures that the desired design frequency f_{Design} is obtained. The natural frequency can be determined alternatively by:

- Type tests using shaking devices
- Measurements at comparable installations
- Theoretical investigations **(2)**

6.11 Mounting elements shall be standardised and of inflammable type. It must be ensured that the elastic properties are maintained during their whole life time. Wire-rope elements are preferred if no structure borne noise isolation is required.

D. Shock Strength

1. Shock loads from underwater explosion

1.1 General

For the calculation of the resulting shock load for a given system the knowledge of the shock response spectrum (SRS) is necessary. The SRS of a shock load represents the maximum response of a linear single degree of freedom (SDOF) vibration system (or a combination of multiple SDOFs) with defined damping characteristics as a function of frequency. A database of SRS has been gathered from naval experience and will be discussed between Naval Authority, shipyard and TL for each individual design. Normally, the SRS represent classified data.

1.2 Shock loads on the hull

If the pressure waves of an underwater explosion in some distance of the naval ship reach the ship, mechanical vibration will be induced. The character of this oscillation primarily depends on the size of the explosion as well as on the stiffness and the mass distribution of the ship.

The oscillation of the directly excited shell of the ship is characterised by high frequency vibration with extremely large acceleration amplitudes in combination with a rigid body motion of the ship. The vibration is non-linear because of:

- Appearance of cavitation, which depends on the relative velocity between water and shell which may increase the original load

- Large deformations, which may be beyond the elastic limit

The vibration expand to the adjacent parts of the hull structure. The frequency decreases with increasing distance from the shell. Often the structural elements are oscillating with their basic natural frequencies in combination with high acceleration amplitudes. This is especially the case if structural elements, like decks and bulkheads are connected to the shell with a low bending rigidity. If the construction of the bulkheads, decks and walls is very stiff the high frequency vibration of the shell reaches also the inner structure of the ship, like superstructures, deckhouses and masts.

From a characteristic "shock response spectrum" (SRS) it can be concluded that, in the lower frequency range the maximum relative deflection, in the medium range the maximum vibration velocity and in the high frequency range the maximum absolute acceleration is decisive for the effect of a shock load.

1.3 Shock loads on the crew

1.3.1 Character of the shock load

For the shock loads on the crew the vertical velocity and acceleration of the decks/floors are decisive.

Fig. 16.2 shows the characteristic course of velocity at the initial state of a shock load process.

If in crew spaces no intermediate floors or other shock reducing constructions are provided, the relations shown in Fig. 16.2 can be derived directly from the shock response spectra (SRS) by the following formulae:

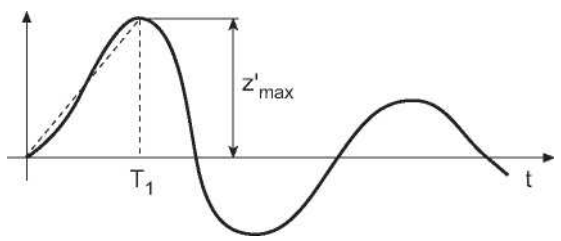

Fig. 16.2 Development of vertical deck velocity at the initial state of the shock load process

$$z'_{max} = 2\frac{v_{SRS}}{3}$$

$$z''_m = \frac{a_{SRS}}{2}$$

$$T_1 = 4\frac{v_{SRS}}{3 \cdot a_{SRS}}$$

z'_{max} = maximum vertical velocity of deck [m/s]

z''_m = average vertical acceleration of deck [m/s^2] = z'_{max} / T_1

v_{SRS} = "pseudo-velocity" according to shock response spectrum (SRS)

a_{SRS} = acceleration according to shock response spectrum (SRS)

T_1 = time of first velocity increase [s]

1.3.2 Assessment of the shock hazard

After the calculation of the vibration accelerations the calculated values can be assessed on basis of diagrams for the maximum vertical velocity on deck as a function of the average vertical acceleration.

Note:

An example for such a diagram is shown in Fig. 16.3. This diagram is divided into the areas of "no injuries", "danger of injuries" and "injuries to be expected". It is obvious that the position "sitting" allows higher deck velocities than the position "standing". The unprotected heads of crew members shall not be accelerated with more than 1 000 [m/s^2]. A velocity increase time T_1 of 0 02 s forms a diagonal boundary.

It shows that for shorter periods T_1 the velocity of the deck is more decisive, for higher values of T_1 the acceleration must be applied. The final limit has to be agreed with the Naval Authority.

1.4 Shock loads on resiliently mounted equipment

1.4.1 Character of the shock load

If no other characteristic is defined by the Naval Authority the analysis of shock behaviour of the equipment and its resilient mounting can be based on the following two forms of acceleration distribution at the initial stage of a shock. If possible the use of the sinusoidal distribution should be preferred against the triangular form.

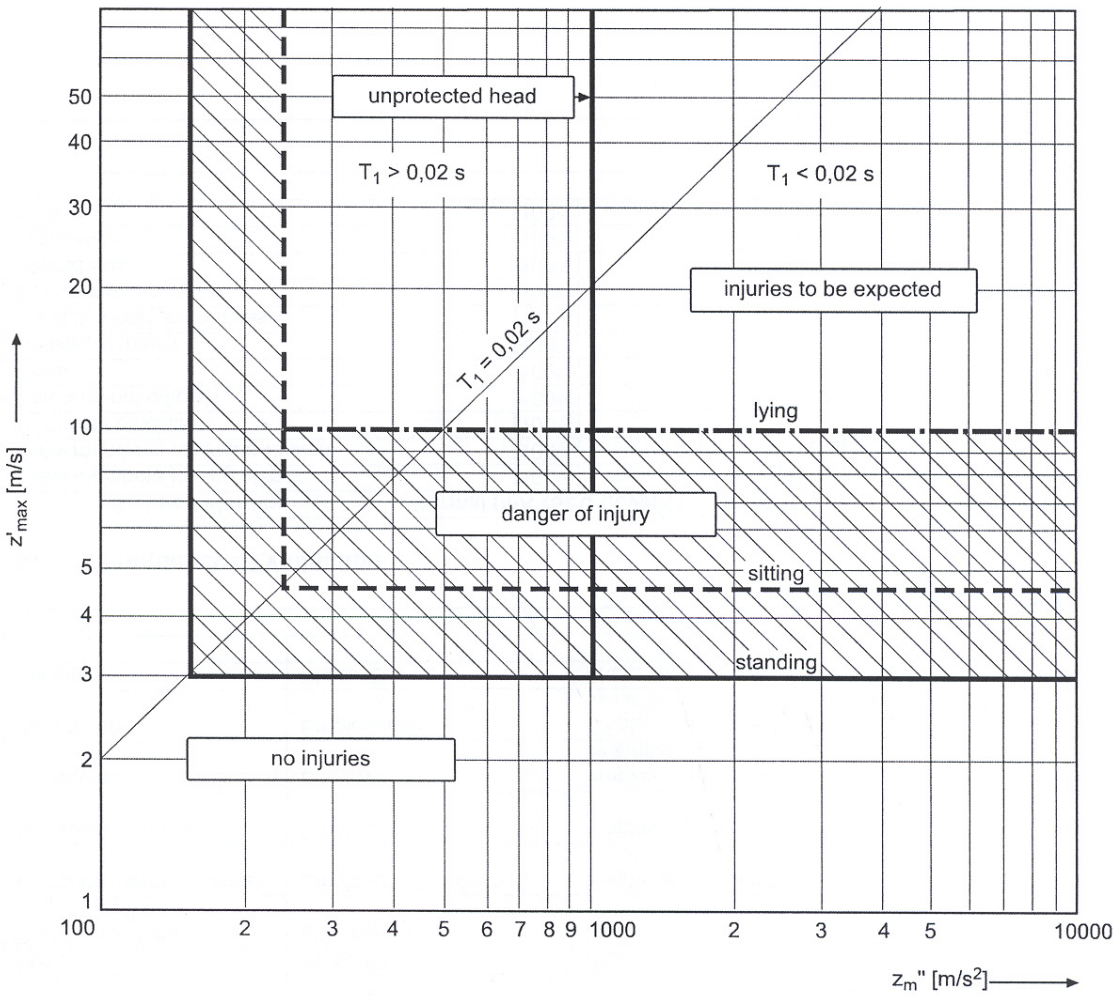

Fig. 16.3 Inspected injuries of the crew due to deck motion caused by shock loads

1.4.1.1 Triangular distribution

This distribution is shown in Fig. 16.4 and defined by:

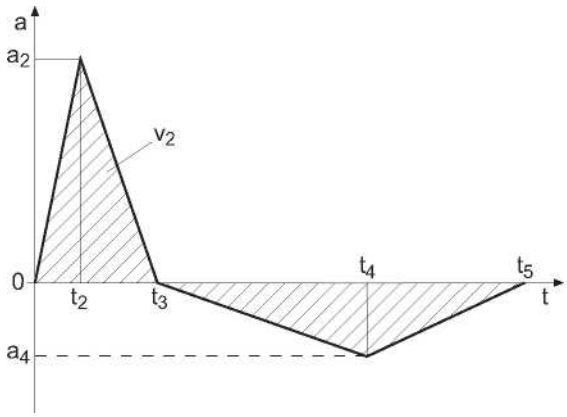

Fig. 16.4 Triangular distribution

- The size of the acceleration peak of the first (positive) triangle shall be 0,6 times of the maximum acceleration a_{SRS} gained from the shock response spectrum (SRS)

- The integration of the area of the first triangle shall create a velocity v_2 which amounts to 75 % of the maximum velocity v_{SRS} according to the SRS

- The area of the second triangle shall be equal to the area of the first triangle to achieve a final velocity of the foundation equal to zero

- The double integration of the acceleration distribution shall give a displacement of the foundation which is slightly bigger (abt. 5 %) than the maximum relative displacement gained from SRS

- It is recommendable to choose $t_2 = 0{,}4 \cdot t_3$ and

$t_4 - t_3 = 0{,}6\ (t_5 - t_3)$

These relations can be defined by the following formulae:

$$a_2 = 0{,}6 \cdot a_{SRS}$$

$$t_3 = 2 \cdot \frac{v_2}{a_2}$$

$$v_2 = \frac{3}{4} \cdot v_0$$

$$t_5 - t_3 = \frac{6 \cdot d_{SRS} \cdot 1{,}05 - 1{,}6 \cdot a_2 \cdot t_3^2}{1{,}6 \cdot a_2 \cdot t_3}$$

$$a_4 = -a_2 \cdot \frac{t_3}{t_5 - t_3}$$

$$t_4 = t_3 + 0{,}6 \cdot (t_5 - t_3)$$

d_{SRS} = relative displacement of foundation according to SRS [m]

1.4.1.2 Double sinusoidal distribution

This distribution is shown in Fig. 16.5 and defined by:

- The amplitude of the positive half wave shall reach approximately half the value of the maximum acceleration a_{SRS} according to SRS
- The area under each half wave shall be about two thirds of the maximum "pseudo-velocity" v_{SRS} according to SRS
- The double integration of this acceleration distribution shall give a relative displacement of the foundation which is equivalent to the maximum relative displacement d_{SRS} gained from SRS

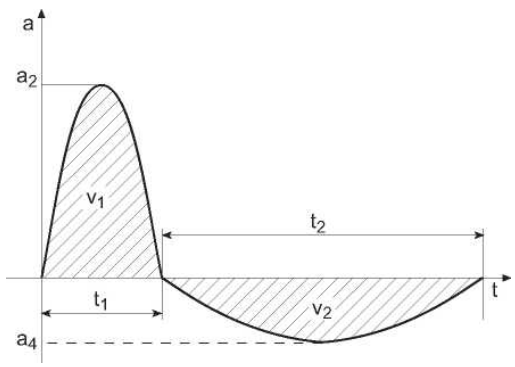

Fig. 16.5 Double sinusoidal distribution of acceleration on equipment foundations caused by shock loads

These relations can be defined by the following formula:

$$a_2 = 0{,}5 \cdot a_{SRS}$$

$$a_4 = -\pi \cdot \frac{v_1}{2 \cdot t_2}$$

$$t_1 = \pi \cdot \frac{v_1}{2 \cdot a_2}$$

$$t_2 = 2 \cdot \frac{d_{SRS}}{v_1} - t_1$$

$$v_1 = v_2 = 2 \cdot \frac{v_{SRS}}{3}$$

1.4.2 Shock loads on equipment in direct contact with water

Components of the equipment located in an area of the ship, which is flooded or which are in direct contact with water have to withstand two types of shock loads:

- Structural shock
- So called water shock, created by the direct contact with the shock wave

Shock resistance can be confirmed by calculation or blasting tests. Tests are preferable compared to calculations.

Equipment exposed to water shock are the rudders (including the shaft), stabilizing fin units, various retractable units, sensors and valves at the ship's shell, etc.

As a basis for the calculation of the shock influence the following pressure distribution of the shock wave can be assumed, see Fig. 16.5:

$$p(t) = \frac{p_{max}}{100} e^{-\frac{t}{\Theta}}$$

p_{max} = maximum pressure [kN/m^2]

Θ = time constant

$P_{max,\Theta}$ = depending on mass of explosive and distance R from explosion location to the relevant element of the ship

For elements of the ship immediately below the water surface a reduction of the pressure load ("Surface Cut-Off") can be assumed, see Fig. 16.6.

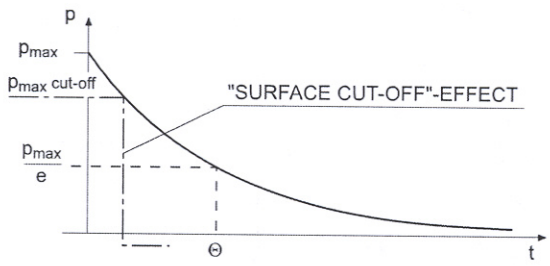

Fig. 16.6 Pressure distribution of an underwater explosion

The absolute amount of the pressure depends on the mass of the explosive and the distance to the relevant component of the ship. Because of the reflection on the component the pressure will be doubled. The effect of the different shock wave parameters for the explosive TNT is demonstrated in the diagram Fig. 16.7. These relations are determined by the following formulae:

$$p_{max} = 524\left(\frac{W^{0,33}}{R}\right)^{1,13} \qquad [\text{bar}]$$

$$\Theta = 0,084 \cdot W^{0,33}\left(\frac{W^{0,33}}{R}\right)^{-0,23} \qquad [\text{milliseconds}]$$

$$I = 0,057 \cdot W^{0,33}\left(\frac{W^{0,33}}{R}\right)^{0,89} \qquad [\text{bar} \cdot \text{s}]$$

$$E = 0,844 \cdot W^{0,33}\left(\frac{W^{0,33}}{R}\right)^{2,04} \qquad [\text{m} \cdot \text{bar}]$$

R = distance between explosive and relevant element of the ship [m]

W = mass of TNT explosive [kg]

p_{max} = maximum pressure [bar]

Θ = time constant [milliseconds]

I = impulse per area [bar · s]

E = energy flow density [m · bar]

On the back side of the component the shock wave passing by builds up a counter pressure area, which supports the component (e.g. the rudder). As the shock wave travels with sonic velocity (1450 -1510 m/s) this supporting effect happens with time retardation and depends on the diffraction of the wave at the component.

Note:

Fig. 16.7 shows an example for a mass of TNT of 1 000 kg and a distance to the ship of 10 m. The results are:

Θ = *0,86 milliseconds*

p_{max} = *500 bar*

I = *0,55 bar · s*

E = *7,80 m · bar*

1.4.3 Installation areas

The effect of a shock load to the equipment of the naval ship depends also on the installation area within the ship's steel structure. Three installation areas can be characterised:

- Installation area I:

  Installation basis is formed by the shell and its supporting structure, tank deck of double bottom, bulkheads up to strength deck, see Fig. 16.8

- Installation area II:

  Installation basis is formed by decks (tween decks and strength deck), walls below strength deck, bulkheads above strength deck, see Fig. 16.9

- Installation area III:

  Installation basis is formed by decks above strength deck, side and intermediate walls above strength deck, see Fig. 16.10

2. Proof of shock safety

2.1 The methods to proof the permissible shock safety of different equipment components have to be agreed with the Naval Authority. Shock tests already executed on order of the Naval Authority may be incorporated in the shock proof procedure.

Only in exceptional, justified cases proof of shock safety will not be needed.

2.2 The following methods for confirming shock safety may be applied:

- Blasting test for the equipment to be checked installed on a shock barge or a blast platform

- Full scale tests at a vibration test stand or a shock test stand

- Partial or model tests, if full scale test facilities of required size are not available

- Calculations, if test facilities of required size are not available

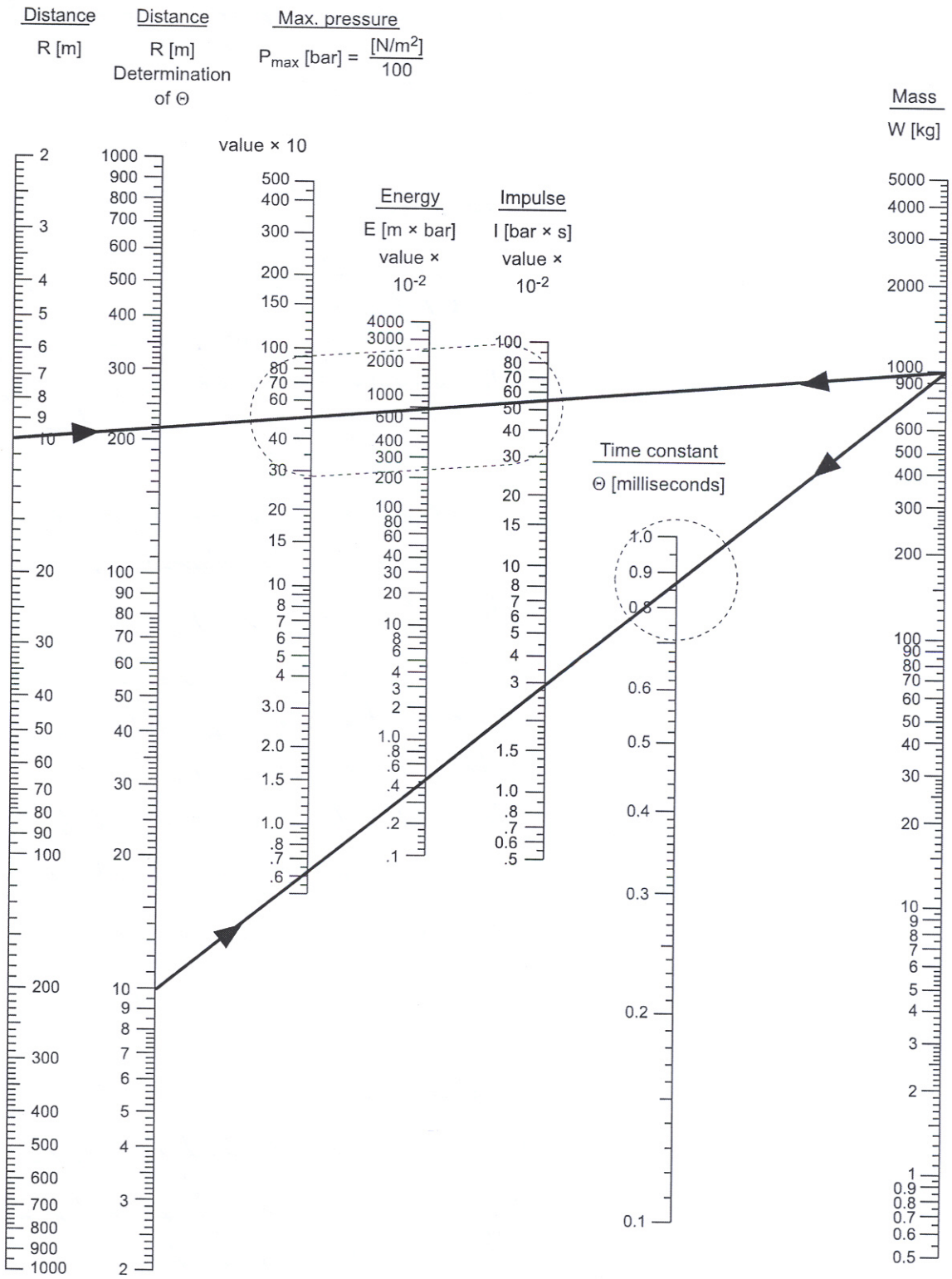

Fig. 16.7 Shock wave parameters of an underwater explosion of TNT

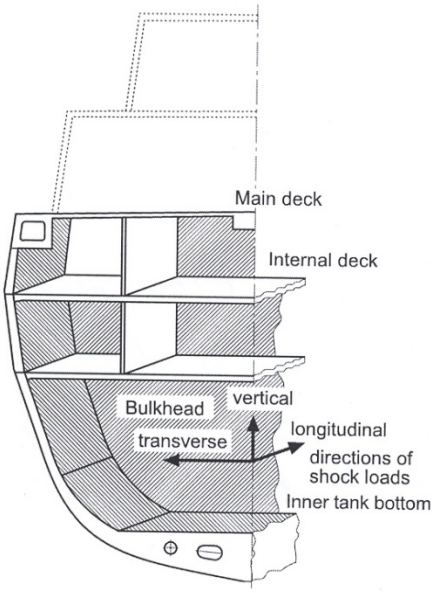

Fig. 16.8 Installation area I

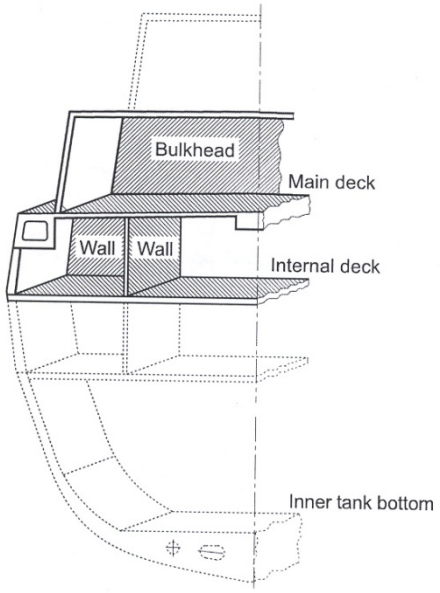

Fig. 16.9 Installation area II

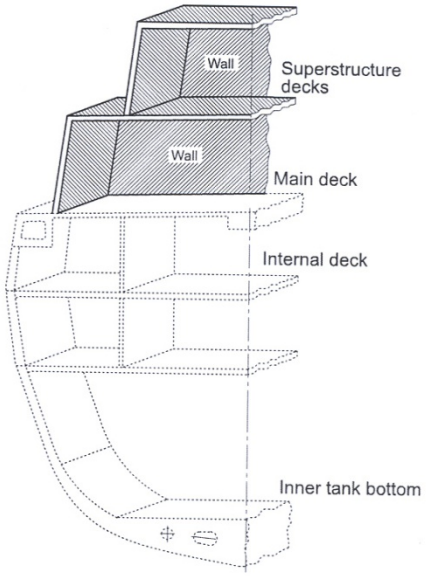

Fig. 16.10 Installation area III

The proof of shock safety is mandatory for the permission to install equipment aboard. If also other tests have to be provided, e.g. tests for electromagnetic compatibility, these tests have to be executed successfully before shock behaviour is investigated as the final test.

2.3 Definition of shock safety classes

In accordance to the importance and type of the combat mission of the naval ship the equipment has to be tested under different conditions. Depending on the relevant test results the equipment will be classed in three "shock safety classes". It is recommended to list all equipment for these classes and to integrate this list to the building specification:

- Shock safety class A:

  For all parts of the equipment which are necessary for the ship's safety and fulfilment of its combat task. Full function during and after shock load without reduction of performance. No loosening of parts which could endanger crew or other equipment of class A.

- Shock safety class B:

  All other parts of the equipment which are not essential for safety and fulfilment of combat task. No loosening of parts which could endanger crew or equipment of class A under full shock load. Nevertheless, they have to withstand reduced shock loads during and after shock.

- Shock class C:

  Equipment with no shock resistance requirements, the mounting of the complete devices has to be done in a way that they do not endanger ship and crew under full shock load.

3. Shock strength of the hull

To improve shock strength of the hull structures of a naval ship already at the beginning of the design process the following recommendations should be observed:

- As far as possible higher strength hull structural steel and tough steel materials should be used
- Hard materials, like cast iron should not be used
- Longitudinal stiffening system should be preferred
- Reinforcing of longitudinal girders
- Symmetrical sections of profiles and girders should be preferred
- Arrange for continuous hull girder scantlings along the ship's length as far as possible
- Avoiding of stress concentrations in the shell like usual at scallops, penetration of seawater pipes, etc. by careful detail design
- Mountings should not be fixed directly to the shell
- Dimensioning of tanks in double bottom in a way that they can be safely used with partial fillings

The basic rule to improve the shock strength is to avoid structural discontinuities, stress concentrations or even stress peaks.

4. Protection of the crew

4.1 Areas of application

If not specially defined by the Naval Authority protection of the crew should be provided for the different spaces of the ship, e.g.:

- Combat information centre (CIC)
- Navigating bridge
- Battle stations
- Machinery control centre (MCC)
- Flight control centre (FCC)
- Damage control centre (DCC)
- Crew's messes, accommodation spaces, galleys, pantries

The primary danger for the crew members consists of injuries of the legs and the backbone. Secondary dangers are injuries due to uncoordinated personal movements caused by excessive deck motions and injuries due to parts of not shockproof devices/equipment having loosened from its supports and scattering through the working or accommodation spaces in uncontrolled manner.

The permissible shock hazards with regard to crew injuries are given in 1.3.2.

The shock loads acting on the crew can be determined according to 1.3.1.

4.2 Measures to reduce the shock danger for the crew

The following measures are recommended:

- Installation of intermediate floors in the spaces where the crew is working and living, if required
- Use of resiliently mounted systems with lowest natural frequency between 3 and 10 Hz, like swing metals with rubber absorbers, hydraulic absorbers, absorbers with plasticity (shear bolts, elements with grating structure, etc.), if required
- No installation of equipment, instruments, etc. with sharp edges
- Exclusive use of equipment with defined shock proof class (only classes A and B at battle stations!)
- Provision of safety belts and neck protections

5. Protection of the equipment

5.1 General requirements

The design principle is to protect the equipment from high shock loads, but to reduce structure-borne sound and avoid vibration at the same time.

Shock isolation of equipment can be achieved by storing temporarily the incoming, high frequent energy and to transfer this energy afterwards with low frequency and small amplitudes to the equipment/device. This requires sufficient margin for spring movement in direction of all three main axes. This requirement has to be observed in parallel with other considerations:

- Vibration, especially these excited by the propellers (the main excitation frequency is equal to the number of shaft revolutions per second x number of propeller blades).

  Such vibration characterised by frequencies below 50 Hz may be in a state of resonance with the resilient mountings, which requires high damping characteristics for them or if possible avoidance of resonance.

- Structure-borne noise, produced by various devices aboard and transmitted into the water thus increasing the ship's signature. To reduce these effects low natural frequencies and restricted damping of the mounting elements are necessary.

- Non-mechanical influences, like the ambient conditions temperature, humidity, oil mist, etc. Temperature may influence the spring characteristics, the other influences mentioned may reduce the life time of the mounting elements.

5.2 Solutions for navy type equipment

The contradictory requirements, summarized in 5.1, demand for a compromise in the design/choice of the elastic elements for the equipment to be protected. Often an acceptable solution can be achieved by using mountings with progressive spring characteristic or by using a combination of shock reducing elements with stoppers to achieve a practical compromise between the requirements regarding shock safety and noise insulation.

The natural frequencies of lowly tuned shock mountings often coincide with the range of the strongest ship vibration. The increase of the amplitude in case of resonance can be limited by using elements with high damping. Unfortunately, high damping is disadvantageous with regard to the insulation of structure borne noise. Therefore, a compromise has to be found in each individual case and to be verified by measurements.

As a first guideline a correlation between the type of equipment/machinery to be protected and the type of the mounting element is defined in Table 16.4.

Table 16.4 Suitability of shock isolating mountings for different types of machinery and equipment

Equipment type → **Type of mounting ↓**	**Electronic devices, control elements**	**Electrical aggregates**	**Control consoles, pointer instru-ments**	**Electrical switch boards**	**Hydraulic units**	**Diesel generator sets**	**Gas turbines**	**Internal combustion engines**
Rubber strips	- **(1)**	0 **(1)**	-	0	+ **(1)**	+	+	+
Elastomer/ rubber spring elements	-	0	-	0	+	0	0	0
Compound shock absorber	+	+	+	0	+	+	0	0
Elastic metal/spring elements	+	+	+	0	+	-	+	-
Damping optimized isolators	+	+	+	+	+	0	0	0

(1) *suitability classification:* *+: very suitable*
0: suitable
-: less suitable

SECTION 17

FATIGUE STRENGTH

Preamble

The proof of sufficient fatigue strength, i e. the strength against crack initiation under dynamic loads during operation, is useful for judging and reducing the probability of crack initiation of structural members during the design stage.

Due to the randomness of the load process, the spreading of material properties and fabrication factors and to effects of ageing, crack initiation cannot be completely excluded during later operation. Therefore among other things periodical surveys are necessary.

A. General

1. Definitions

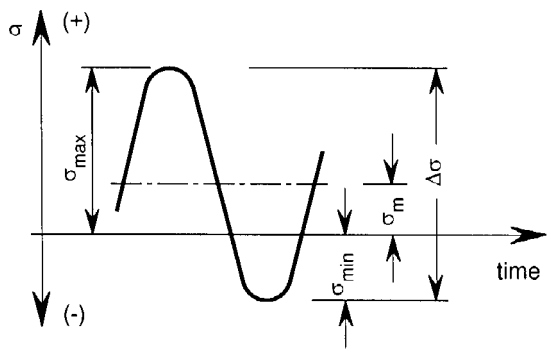

Fig. 17.1 Definition of time-dependent stresses

$\Delta\sigma$ = applied stress range (σ_{max} - σ_{min}) [N/mm^2], see also Fig. 17.1

σ_{max} = maximum upper stress of a stress cycle [N/mm^2]

σ_{min} = maximum lower stress of a stress cycle [N/mm^2]

$\Delta\sigma_{max}$ = applied peak stress range within a stress range spectrum [N/mm^2]

σ_m = mean stress ($\sigma_{max}/2 + \sigma_{min}/2$) [N/mm^2]

$\Delta\sigma_p$ = permissible stress range [N/mm^2]

$\Delta\tau$ = corresponding range for shear stress [N/mm^2]

n = number of applied stress cycles

N = number of endured stress cycles according to S-N curve (= endured stress cycles under constant amplitude loading)

$\Delta\sigma_R$ = fatigue strength reference value of S-N curve at $2 \cdot 10^6$ cycles of stress range [N/mm^2] (= detail category number according to Table 17.3)

f_m = correction factor for material effect

f_R = correction factor for mean stress effect

f_w = correction factor for weld shape effect

f_i = correction factor for importance of structural element

f_s = additional correction factor for structural stress analysis

f_n = factor considering stress spectrum and number of cycles for calculation of permissible stress range

$\Delta\sigma_{Rc}$ = corrected fatigue strength reference value of S-N curve at $2 \cdot 10^6$ stress cycles [N/mm^2]

D = cumulative damage ratio

2. Scope

2.1 A fatigue strength analysis is to be performed for structures which are predominantly subjected to cyclic loads. Due consideration shall thereby be given to auxiliary structures such as e.g. fasteners. The notched details i.e. the welded joints as well as notches at free plate edges are to be considered individually.

The fatigue strength assessment is to be carried out either on the basis of a permissible peak stress range for standard stress spectra, see B.2.1 or on the basis of a cumulative damage ratio, see B.2.2.

2.2 No fatigue strength analysis is required if the peak stress range due to dynamic loads in the seaway (stress spectrum A according to 2.4) and/or due to

changing draught or loading conditions, respectively, fulfils the following conditions:

- Peak stress range only due to seaway-induced dynamic loads:

$$\Delta\sigma_{max} \leq 2{,}5\ \Delta\sigma_R$$

- Sum of the peak stress ranges due to seaway-induced dynamic loads and due to changes of draught or loading condition, respectively:

$$\Delta\sigma_{max} \leq 4{,}0\ \Delta\sigma_R$$

Note:

For welded steel structures of detail category 80 or higher a fatigue strength analysis is required only in case of extraordinary high dynamic stresses.

2.3 The rules are applicable to constructions made of normal and higher strength hull structural steels according to Section 3, B. as well as of aluminium alloys according to Section 3, D. Other materials such as cast steel can be treated in an analogous manner by using appropriate design S-N curves.

Low cycle fatigue problems in connection with extensive cyclic yielding have to be specially considered. When applying the following rules, the calculated nominal stress range should not exceed 1,5 times the minimum yield stress. In special cases the fatigue strength analysis may be performed by considering the local elasto-plastic stresses.

2.4 The stress ranges $\Delta\sigma$ which are to be expected during the service life of the ship or structural component, respectively, may be described by a stress range spectrum (long-term distribution of stress range). Fig. 17.2 shows three standard stress range spectra A, B and C, which differ from each other in regard to the distribution of stress range $\Delta\sigma$ as a function of the number of load cycles.

In general the fatigue analysis has to be performed for a number of cycles $n_{max} = 5 \cdot 10^7$ for seaway induced stresses with the stress range spectrum A. This considers a lifetime of 25 years with 230 days per year at sea in the North Atlantic.

Modified numbers of cyclic loads, load profiles and life time have to be agreed with the Naval Authority. In this case the maximum and minimum stresses result from the maximum and minimum relevant seaway-induced load effects. The different load-effects are, in general, to be superimposed conservatively. Table 17.1 shows examples for the individual loads which have to be considered in normal cases. Other significant fluctuating stresses, e.g. in longitudinals due to deflections of supporting transverses as well as additional stresses due to the application of non-symmetrical sections, have to be considered, see Section 4, C.5.

For ships of unconventional hull shape and for ships for which a special mission profile applies, a stress range spectrum deviating from spectrum A may be applied which may be evaluated by the spectral method.

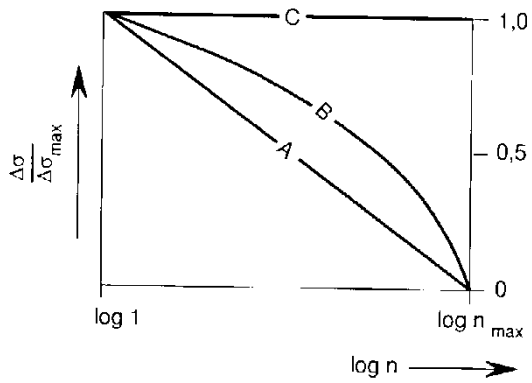

A : straight-line spectrum (typical stress range spectrum of seaway-induced stress ranges),

B : parabodic spectrum (approximated normal distribution of stress range $\Delta\sigma$),

C : rectangular spectrum (constant stress range within the whole spectrum; typical spectrum of engine-or propeller-excited stress ranges).

Fig. 17.2 Standard stress range spectra A, B and C

2.5 Additional stress cycles resulting from changing mean stresses, e.g. due to changing loading conditions or draught, need generally not be considered as long as the seaway-induced stress ranges are determined for the loading condition being most critical with respect to fatigue strength and the maximum change in mean stress is less than the maximum seaway-induced stress range.

Larger changes in mean stress are to be included in the stress range spectrum by conservative super positioning of the largest stress ranges, e.g. in accordance with the "rain flow counting method".

2.6 The fatigue strength analysis is, depending on the detail considered, based on one of the following types of stress:

- For notches of free plate edges the notch stress σ_k, determined for linear-elastic material behaviour, is relevant, which can normally be calculated from a nominal stress σ_n and a theoretical stress concentration factor K_t. Values for K_t are given in Section 4, Fig. 4.15 and Fig. 4.16 for different types of cut-outs. The fatigue strength is determined by the detail category (or $\Delta\sigma_R$) according to Table 17.3, type 29 and 30.

- For welded joints the fatigue strength analysis is normally based on the nominal stress σ_n at the structural detail considered and on an appropriate detail classification as given in Table 17.3, which defines the detail category (or $\Delta\sigma_R$).

- For those welded joints, for which the detail classification is not possible or additional stresses occur, which are not or not adequately considered by the detail classification, the fatigue strength analysis may be performed on the basis of the structural stress σ_s in accordance with C.

3. Quality requirements (fabrication tolerances)

3.1 The detail classification of the different welded joints as given in Table 17.3 is based on the assumption that the fabrication of the structural detail or welded joint, respectively, corresponds in regard to external defects at least to quality group B according to DIN 8563 and in regard to internal defects at least to quality group C. Further information about the tolerances can also be found in the Production Standard of the Turkish and German Shipbuilding Industry.

A production standard which considers the special manufacturing requirements of naval ships has to be agreed case by case with TL, see Section 1, E.2.1.

3.2 Relevant information has to be included in the manufacturing document for fabrication. If it is not possible to comply with the tolerances given in the standards, this has to be accounted for, when designing the structural details or welded joints, respectively. In special cases an improved manufacture as stated in 3.1 may be required, e.g. stricter tolerances or improved weld shapes, see also B.3.2.4.

B. Fatigue Strength Analysis for Free Plate Edges and for Welded Joints Using Detail Classification

1. Definition of nominal stress and detail classification for welded joints

1.1 Corresponding to their notch effect, welded joints are normally classified into detail categories considering particulars in geometry and fabrication, including subsequent quality control, and definition of nominal stress. Table 17.3 shows the detail classification based on recommendations of the International Institute of Welding (IIW) giving the detail category number (or $\Delta\sigma_R$) for structures made of steel or aluminium alloys (Al).

In Table 17.4 $\Delta\sigma_R$-values for steel are given for some intersections of longitudinal frames of different shape and webs, which can be used for the assessment of the longitudinal stresses.

It has to be noted that some influence parameters cannot be considered by the detail classification and that a large scatter of fatigue strength has therefore to be reckoned with.

1.2 Details which are not contained in Table 17.3 may be classified either on the basis of local stresses in accordance with C. or, else, by reference to published experimental work or by carrying out special fatigue tests, assuming a sufficiently high confidence level, see 3.1 and taking into account the correction factors as given in C.4.

1.3 Regarding the definition of nominal stress, the arrows in Table 17.3 indicate the location and direction of the stress for which the stress range is to be calculated. The potential crack location is also shown in

Table 17.3. Depending on this crack location, the nominal stress range has to be determined by using either the cross sectional area of the parent metal or the weld throat thickness, respectively. Bending stresses in plate and shell structures have to be incorporated into the nominal stress, taking the nominal bending stress acting at the location of crack initiation.

Note:
The factor K_s for the stress increase at transverse butt welds between plates of different thickness, see type 5 in Table 17.3 can be estimated in a first approximation as follows:

$$K_S = \frac{t_2}{t_1}$$

t_1 = smaller plate thickness,

t_2 = larger plate thickness,

Additional stress concentrations which are not characteristic of the detail category itself, e.g. due to cut-outs in the neighbourhood of the detail, have also to be incorporated into the nominal stress.

1.4 In the case of combined normal and shear stress the relevant stress range is to be taken as the range of the principal stress at the potential crack location which acts approximately perpendicular (within ± 45°) to the crack front as shown in Table 17.3, as long as it is larger than the individual stress components.

1.5 Where pure shear stresses are acting, the largest principal stress $\sigma_1 = \tau$ may be used in combination with the relevant detail category.

Table 17.1 Maximum and minimum value for variable cyclic loads

Load	Maximum load (1)		Minimum load (1)
Vertical and horizontal hull girder bending (Section 6, F.)	$\sigma = \sigma_{SW} + \psi_i \cdot \sqrt{\sigma_{WV}^2 + \sigma_{WH}^2}$		$\sigma = \sigma_{SW} - \psi_i \cdot \sqrt{\sigma_{WV}^2 + \sigma_{WH}^2}$
Loads on weather decks, weather exposed walls and at ship's shell above **T** (Section 5, C.1.)	$p_s = \psi_i \cdot p_0 \cdot c_F \cdot \left\{ 0{,}25 + \frac{1{,}75}{1 + \frac{z - \mathbf{T}}{c_0}} \right\} \cdot n_1 \cdot n_2 \cdot n_3$		$p_s = 0$
Loads on ship's shell below and at **T** (Section 5, C.1.)	$p_s = 10(\mathbf{T} - z) + \psi_i \cdot p_0 \cdot c_F \cdot \left[1 + \left(\frac{z}{\mathbf{T}} \right)^{0{,}75} \right]$		$p_s = 10(\mathbf{T} - z) + \psi_i \cdot p_0 \cdot c_F \cdot \left[1 + \left(\frac{z}{\mathbf{T}} \right)^{0{,}75} \right]$ $p_s \geq 0$
Liquid pressure in completely filled tanks (Section 5, G.1.)	$p_{T1} = g \cdot h_1 \cdot \rho(1 + \psi_i \cdot a_z) + 100 \cdot \Delta p$		$p_{T1} = g \cdot h_1 \cdot \rho(1 - \psi_i \cdot a_z) + 100 \cdot \Delta p$
Loads due to general stowage (Section 5, F.)	$p_L = p_c\,(1 + \Psi_i \cdot a_z)$	vertical	$p_L = p_c\,(1 - \Psi_i \cdot a_z)$
	$= p_c \cdot \Psi_i \cdot a_x$	longitudinal	$= -\,p_c \cdot \Psi_i \cdot a_x$
	$= p_c \cdot \Psi_i \cdot a_y$	transverse	$= -\,p_c \cdot \Psi_i \cdot a_y$
Loads due to rudder forces **(2)** (Section 12, B.)	rudder force C_R rudder torque Q_R		$-\,C_R$ $-\,Q_R$

(1) *Maximum and minimum loads are to be determined that the largest applied stress range $\Delta\sigma$ as per Fig. 17.1 is obtained. The loads are to be superposed with the load combination factor ψi according to Section 4, A.2.2.2 if applicable.*

(2) *In general the largest load is to be taken in connection with the load spectrum B according to Fig. 17.2 without considering further cyclic loads.*

Table 17.2 Factor f_n for the determination of the permissible stress range for standard stress range spectra

Stress range spectrum	Welded joints (m_0 = 3) n_{max}=				Plates edges: Type 28 (m_0 = 5) n_{max} =				Type 29 (m_0 = 4) n_{max} =				Type 30 (m_0 = 3,5) n_{max} =			
	10^3	10^5	$5 \cdot 10^7$	10^8	10^3	10^5	$5 \cdot 10^7$	10^8	10^3	10^5	$5 \cdot 10^7$	10^8	10^3	10^5	$5 \cdot 10^7$	10^8
A		(17,2)	3,66	3,16		(8,1)	3,67	3,36		(9,2)	3,76	3,36		(10,3) (12,2) **(2)**	3,74	3,30
B		(9,2)	1,76	1,53	(9,5)	5,0	1,99	1,82	(11,2)	5,9	1,93	1,73		6,6 7,5 **(2)**	1,86	1,65
C	(12,6)	2,71	0,465 0,737 **(1)**	0,405 0,737 **(1)**	4,57	1,82	0,645 0,833 **(1)**	0,597 0,833 [1]	(5,2)	2,11	0,572 0,795 [1]	0,518 0,795 **(1)**	(8,8)	2,35	0,525 0,770 **(1)**	0,467 0,770 **(1)**

For definition of type 28 to type 30 see Table 17.3.
For definition of m_o see 3.1.2.
The values given in parentheses may be applied for interpolation.
For interpolation between any pair of values (n_{max1} ; f_{n1}) and (n_{max2} ; f_{n2}), the following formula may be applied in the case of stress spectrum A or B:

$$\log f_n = \log f_{n1} + \log(n_{max} / n_{max1}) \frac{\log(f_{n2} / f_{n1})}{\log(n_{max2} / n_{max1})}$$

For the stress spectrum C intermediate values may be calculated according to 3.1.2 by taking $N = n_{max}$ and $f_n = \Delta\sigma / \Delta\sigma_R$.

(1) *f_n for non-corrosive environment, see also 3.1.4.*

(2) *$\Delta\sigma_R$= 100 [N/mm^2]*

2. Permissible stress range for standard stress range spectra or calculation of the cumulative damage ratio

2.1 For standard stress range spectra according to Fig. 17.2, the permissible peak stress range can be calculated as follows:

$$\Delta\sigma_P = f_n \cdot \Delta\sigma_{Rc}$$

$\Delta\sigma_{Rc}$ = detail category or fatigue strength reference value, respectively, corrected according to 3.2

f_n = factor as given in Table 17.2

The peak stress range of the spectrum must not exceed the permissible value, i.e.

$$\Delta\sigma_{max} \leq \Delta\sigma_p$$

2.2 If the fatigue strength analysis is based on the calculation of the cumulative damage ratio, the stress range spectrum expected during the envisaged service life is to be established, see A.2.4 and the cumulative damage ratio D is to be calculated as follows:

$$D = \sum_{i=1}^{I} (n_i / N_i)$$

I = total number of blocks of the stress range spectrum for summation (normally I ≥ 20)

n_i = number of stress cycles in block i

N_i = number of endured stress cycles determined from the corrected design S-N curve (see 3.) taking $\Delta\sigma = \Delta\sigma_i$

$\Delta\sigma_i$ = stress range of block i

To achieve an acceptable high fatigue life, the cumulative damage ratio should not exceed D = 1.

If the expected stress range spectrum can be superimposed by two or more standard stress spectra according to A.2.4, the partial damage ratios D_i due to the individual stress range spectra can be derived from Table 17.2. In this case a linear relationship between number of load cycles and cumulative damage ratio may be assumed. The numbers of load cycles given in Table 17.2 apply for a cumulative damage ratio of D= 1.

3. Design S-N curves

3.1 Description of the design S-N curves

3.1.1 The design S-N curves for the calculation of the cumulative damage ratio according to 2.2 are shown in Fig. 17.3 for welded joints at steel and in Fig. 17.4 for notches at plate edges of steel plates. For aluminium alloys (Al) corresponding S-N curves apply with reduced detail categories $\Delta\sigma_R$ acc. to Table 17.3. The S-N curves represent the lower limit of the scatter band of 95 % of all test results available (corresponding to 97,5 % survival probability) considering further detrimental effects in large structures.

To account for different influence factors, the design S-N curves have to be corrected according to 3.2.

3.1.2 The S-N curves represent section-wise linear relationships between log ($\Delta\sigma$) and log (N):

$$\log(N) = 6{,}69897 + m \cdot Q$$

$Q = \log(\Delta\sigma_R / \Delta\sigma) - 0{,}39794/m_0$

m = slope exponent of S-N curve, see 3.1.3 and 3.1.4

m_0 = slope exponent in the range $N \leq 5 \cdot 10^6$

= 3 for welded joints

= 3,5 ÷ 5 for free plate edges, see Fig. 17.4

The S-N curve for detail category 160 forms the upper limit also for the S-N curves of free edges of steel plates with detail categories 100 - 140 in the range of low stress cycles, see Fig. 17.4.

The same applies accordingly to detail categories 71 or 80 of aluminium alloys, see type 28 in Table 17.3.

3.1.3 For structures subjected to variable stress ranges, the S-N curves shown by the solid lines in Fig. 17.3 and Fig. 17.4 have to be applied (S-N curves of type "M"), i.e.

$m = m_0$ for $Q \leq 0$

$m = 2 \cdot m_0 - 1$ for $Q > 0$

3.1.4 For stress ranges of constant magnitude (stress range spectrum C) in non-corrosive environment the stress range given at $N = 5 \cdot 10^6$ cycles may be taken as fatigue limit (S-N curves of type "O" in Fig. 17.3 and Fig. 17.4), thus:

$m = m_0$ for $Q < 0$

$m = \infty$ for $Q > 0$

3.2 Correction of the reference value of the design S-N curve

3.2.1 A correction of the reference value of the S-N curve (or detail category) is required to account for additional influence factors on fatigue strength as follows:

$$\Delta\sigma_{Rc} = f_m \cdot f_R \cdot f_w \cdot f_i \cdot \Delta\sigma_R$$

f_m, f_R, f_w, defined in 3.2.2 - 3.2.5

In order to account for the plate thickness effect, application of an additional reduction factor may be required by TL for welded connections oriented transversely to the direction of applied stress with larger plate thicknesses.

For the description of the corrected design S-N curve, the formulae given in 3.1.2 may be used by replacing $\Delta\sigma_R$ by $\Delta\sigma_{Rc}$.

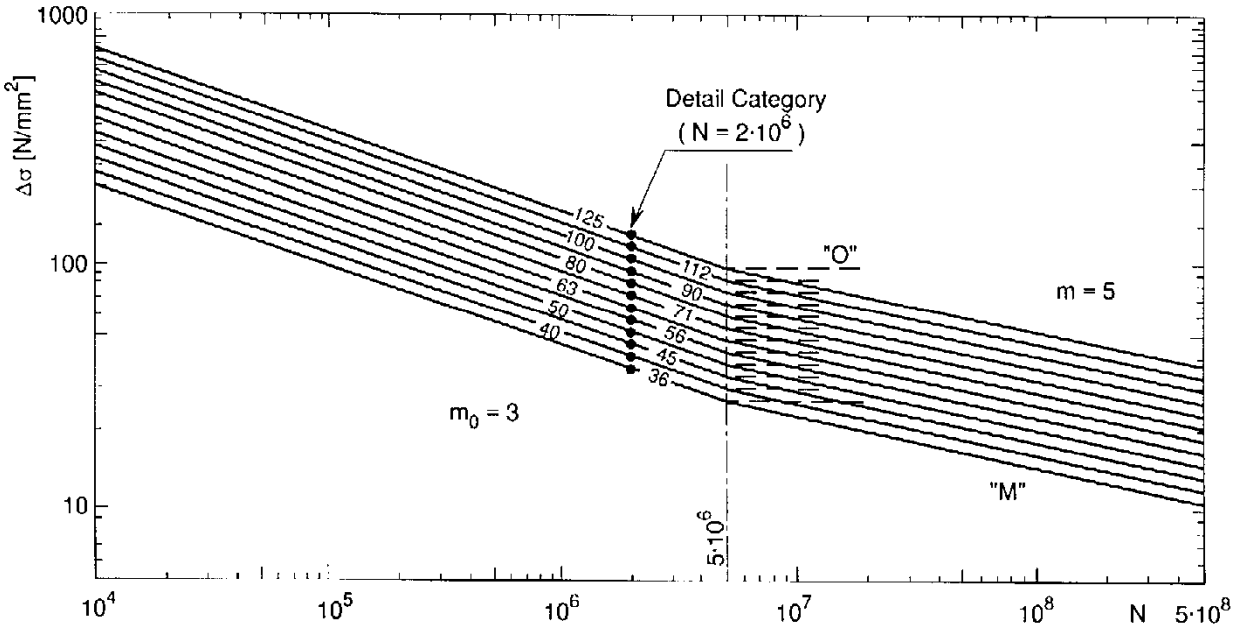

Fig. 17.3 Design S-N curves for cumulative damage of welded joints (steel)

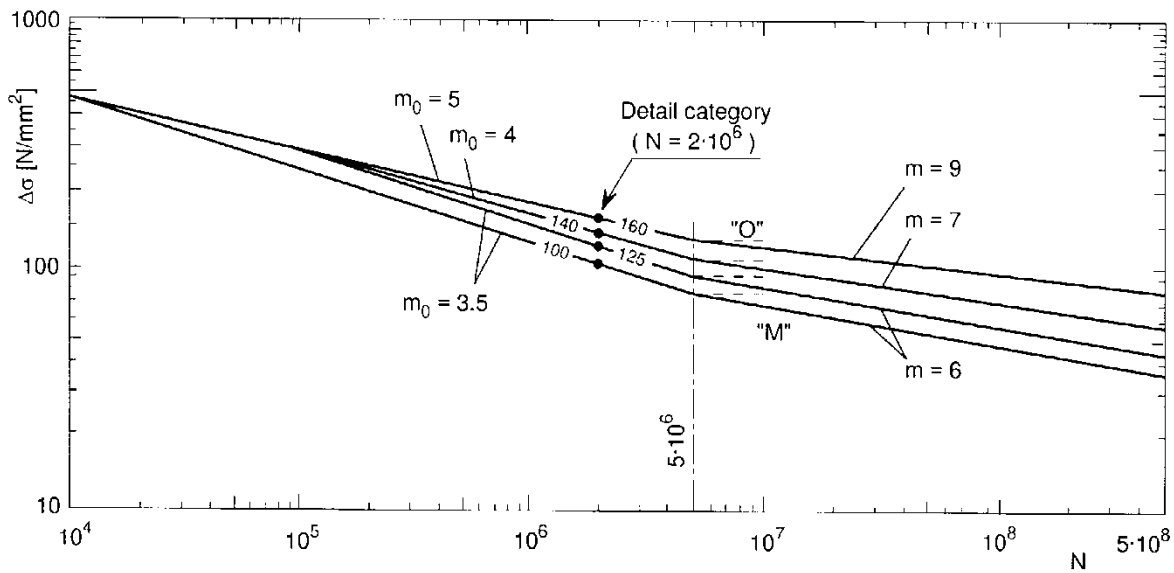

Fig. 17.4 Design S-N curves for cumulative damage for notches at plate edges of steel plates

3.2.2 Material effect (f_m)

For welded joints it is generally assumed that the fatigue strength is independent of steel strength, i.e.:

$f_m = 1{,}0$

For free edges at steel plates the effect of the material's yield point is accounted for as follows:

$$f_m = 1 + \frac{R_{eH} - 235}{1200}$$

R_{eH} = minimum yield stress of the steel [N/mm²] acc. to Section 3, B.

For aluminium alloys, $f_m = 1$ generally applies.

3.2.3 Effect of mean stress (f_R)

The correction factor is calculated as follows:

- in the range of tensile pulsating stresses, i.e.

$$\sigma_m \geq \frac{\Delta\sigma_{max}}{2}$$

$f_R = 1,0$

- in the range of alternating stresses, i.e.

$$-\frac{\Delta\sigma_{max}}{2} \le \sigma_m \le \frac{\Delta\sigma_{max}}{2}$$

$$f_R = 1 + c\left(1 - \frac{2\cdot\sigma_m}{\Delta\sigma_{max}}\right)$$

- in the range of compressive pulsating stresses, i.e.

$$\sigma_m \le -\frac{\Delta\sigma_{max}}{2}$$

$f_R = 1+2 \cdot c$

c = 0 for welded joints subjected to constant stress cycles (stress range spectrum C)

= 0,15 for welded joints subjected to variable stress cycles (corresponding to stress range spectrum A or B)

= 0,3 for free plate edges

3.2.4 Effect of weld shape (f_w)

In normal cases:

$f_w = 1,0$

A factor $f_w > 1,0$ applies for welds treated e.g. by grinding. By this surface defects such as slag inclusions, porosity and crack-like undercuts shall be removed and a smooth transition from the weld to the base material shall be achieved. Final grinding shall be performed transversely to the weld direction. The depth should be approx. 0,5 mm larger than that of visible undercuts. For ground weld toes of fillet and K-butt welds:

$f_w = 1,15$

For butt welds ground flush either the corresponding detail category has to be chosen, e.g. Type No. 1 in Table 17.3, or a weld shape factor

$f_w = 1,25$

may be applied.

For endings of stiffeners or brackets, e.g. Type 14 or 16 in Table 17.3, which have a full penetration weld and are completely ground flush to achieve a notch-free transition, the following factor applies:

$f_w = 1,4$

The assessment of a local post-weld treatment of the weld surface and the weld toe by other methods has to be agreed on in each case.

3.2.5 Influence of importance of structural element (f_i)

In general the following applies:

$f_i = 1,0$

For secondary structural elements failure of which may cause failure of larger structural areas, the correction factor f_i is to be taken as:

$f_i = 0,9$

For notches at plate edges in general the following correction factor is to be taken which takes into account the radius of rounding:

$f_i = 0,9 + 5/r \le 1,0$

r = notch radius [mm]; for elliptical roundings the mean value of the two main half axes may be taken

C. Fatigue Strength Analysis for Welded Joints Based on Local Stresses

1. Alternatively to the procedure described in the preceding, the fatigue strength analysis for welded joints may be performed on the basis of local stresses. For common plate and shell structures in ships the assessment based on the so-called structural (or hot-spot) stress σ_s is normally sufficient.

The structural stress is defined as the stress being extrapolated to the weld toe excluding the local stress concentration in the local vicinity of the weld, see Fig. 17.5.

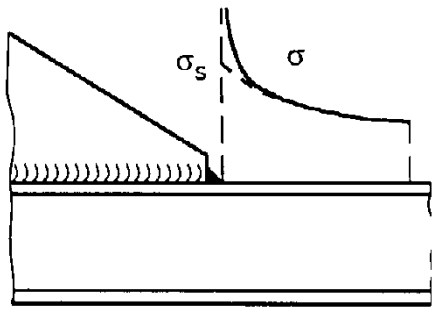

Fig. 7.5 Local stress concentration at the weld toe

2. The structural stress can be determined by measurements or numerically, e.g. by the finite element method using shell or volumetric models, under the assumption of linear stress distribution over the plate thickness. Normally the stress is extrapolated linearly to the weld toe over two reference points which are located 0,5 and 1,5 x plate thickness away from the weld toe. In some cases the structural stress can be calculated from the nominal stress σ_n and a structural stress concentration factor K_s, which has been derived from parametric investigations using the methods mentioned. Parametric equations should be used with due consideration of their inherent limitations and accuracy.

3. For the fatigue strength analysis based on structural stress, the S-N curves shown in Fig. 17.3 apply with the following reference values:

$\Delta\sigma_R$ = 100 (resp. 36 for Al)

for K-butt welds with fillet welded ends, e.g. Type N0. 21 in Table 17.3, and for fillet welds which carry no load or only part of the load of the attached plate, e.g. Type No. 17 in Table 17.3

$\Delta\sigma_R$ = 90 (resp. 32 for Al)

for fillet welds, which carry the total load of the attached plate, e.g. Type No. 22 in Table 17.3.

For butt welds the values given for Type Nos. 1 to 6 in Table 17.3 apply. In special cases, where e.g. the structural stresses are obtained by non-linear extrapolation to the weld toe and where they contain a high bending portion, increased reference values of up to 15 % can be allowed.

4. The reference value A_{OR_C} of the corrected S-N curve is to be determined according to B.3.2, taking into account the following additional correction factor which describes further influencing parameters such as e.g. pre-deformations:

$$f_s = \frac{k_m^*}{k_m - \frac{\Delta\sigma_{s,b}}{\Delta\sigma_{s,max}}(k_m - 1)}$$

$\Delta\sigma_{s,max}$ = applied peak stress range within a stress range spectrum

$\Delta\sigma_{s,b}$ = bending portion of $\Delta\sigma_{s,max}$

k_m = stress increase factor due to pre-deformations under axial loading, at least:

= 1,3 for butt welds, transverse stiffeners or tee-joints (corresponding to Type Nos. 1-6, 17 and 21 - 22 in Table 17.3)

= 1,45 for cruciform joints (corresponding to Type Nos. 21 and 22 in Table 17.3)

= 1,0 in all other cases

k_m^* = Stress increase factor already contained in the fatigue strength reference value $\Delta\sigma_R$:

= 1,3 for butt welds (corresponding to Type Nos. 1-6 in Table 17.3),

= 1,0 in all other cases.

For simplification, $f_s = k_m^*/k_m$ may be applied.

The permissible stress range or cumulative damage ratio, respectively, has to be determined according to B.2.

5. In addition to the assessment of the structural stress at the weld toe, the fatigue strength with regard to root failure has to be considered by analogous application of the respective detail category, e.g. Type No. 23 of Table 17.3. In this case the relevant stress is the stress in the weld throat caused by the axial stress in the plate perpendicular to the weld.

.

Table 17.3 Catalogue of details

Type No.	Joint configuration showing mode of fatigue cracking and stress σ considered	Description of joint	Detail category $\Delta\sigma_R$	
			Steel	Al
1		Transverse butt weld ground flush to plate, 100% NDT (Non-Destructive Testing)	125	50
2		Transverse butt weld made in the shop in flat position, max. weld reinforcement 1 mm + 0,1 x weld width, smooth transitions, NDT	100	40
3		Transverse butt weld not satisfying conditions for joint type No.2, NDT	80	32
4	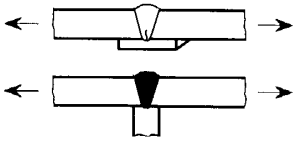	Transverse butt weld on backing strip or three-plate connection with unloaded branch	71	25
5	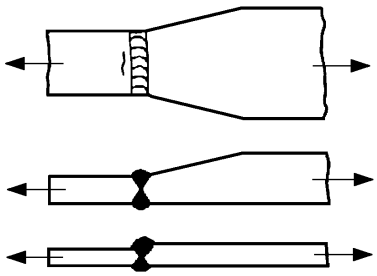	Transverse butt welds between plates of different widths or thickness, NDT as for joint type No.2, slope 1: 5 as for joint type No.2, slope 1: 3 as for joint type No.2, slope 1: 2 as for joint type No.3, slope 1: 5 as for joint type No.3, slope 1: 3 as for joint type No.3, slope 1: 2 For the third sketched case the slope results from the ratio of the difference in plate thicknesses to the breadth of the welded seam. Additional bending stress due to thickness change to be considered, see also B.1.3.	 100 90 80 80 71 63	 32 28 25 25 22 20
6		Transverse butt welds welded from one side without baking bar, full penetration root controlled by NDT not NDT For tubular profiles $\Delta\sigma_R$ may be lifted to the next higher detail category.	 71 45	 28 18
7		Partial penetration butt weld; the stress is to be related to the weld throat sectional area, weld overfill not to be taken into account	45	16
8	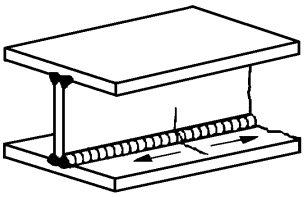	Continuous automatic longitudinal fully penetrated butt weld without stop/start positions (based on stress range in flange adjacent to weld)	125	50

Table 17.3 Catalogue of details *(continued)*

Type No.	Joint configuration showing mode of fatigue cracking and stress σ considered	Description of joint	Detail category $\Delta\sigma_R$	
			Steel	Al
9	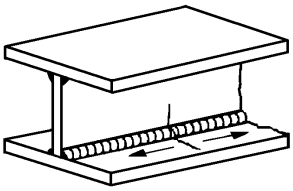	Continuous automatic longitudinal fillet weld without stop/start positions (based on stress range in flange adjacent to weld)	100	40
10	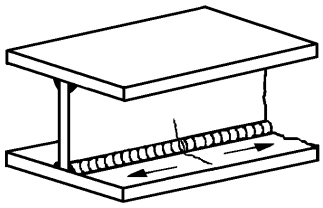	Continuous manual longitudinal fillet or butt weld (based on stress range in flange adjacent to weld)	90	36
11	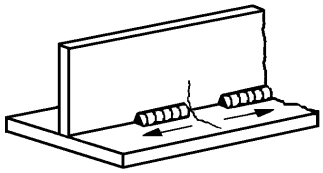	Intermittent longitudinal fillet weld (based on stress range in flange at weld ends) In presence of shear τ in the web, the detail category has to be reduced by the factor (1-Δτ/Δσ), but not below 36 (steel) or 14 (Al)	80	32
12	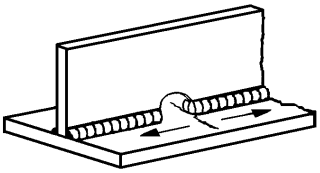	Longitudinal butt weld, fillet weld or intermittent fillet weld with cut outs (based on stress range in flange at weld ends) If cut out is higher than 40% of web height In presence of shear τ in the web, the detail category has to be reduced by the factor (1-Δτ/Δσ), but not below 36 (steel) or 14 (Al) ***Remark*** *For Ω-shaped scallops, an assessment based on local stress in recommended.*	71 63	28 25
13	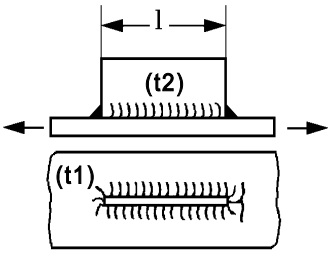	Longitudinal gusset welded on beam flange, bulb or plate: $\ell \leq$ 50 mm. 50 mm. < $\ell \leq$ 150 mm. 150 mm. < $\ell \leq$ 300 mm. ℓ > 300 mm. For $t_2 \leq 0{,}5\ t_1$, $\Delta\sigma_R$ may be increased by one category, but over 80 (steel) or 28 (Al); not valid for bulb profiles. When welding close to edges of plates or profiles (distance less than 16 mm) and/or the structural element is subjected to bending, $\Delta\sigma_R$ is to be decreased by one category	80 71 63 56	28 25 20 18

Table 17.3 Catalogue of details *(continued)*

Type No.	Joint configuration showing mode of fatigue cracking and stress σ considered	Description of joint	Detail category $\Delta\sigma_R$	
			Steel	Al
14	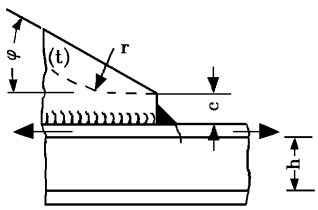	Gusset with smooth transition (sniped end or radius) welded on flange beam flange, bulb or plate, $c \le 2\ t_2$, max. 25 mm. $r \ge 0{,}5\ h$ $r < 0{,}5\ h$ or $\varphi \le 20°$ $\varphi > 20°$ see joint type 13 For $t_2 \le 0{,}5\ t_1$, $\Delta\sigma_R$ may be increased by one category; not valid for bulb profiles. When welding close to the edges of plates or profiles (distance less than 10 mm), $\Delta\sigma_R$ is to be decreased by one category.	71 63	25 20
15	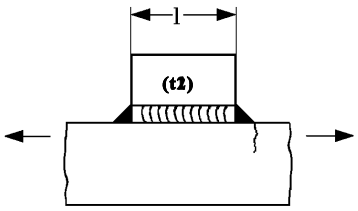	Longitudinal flat side gusset welded on plate or beam flange edge $\ell \le 50$ mm. 50 mm. $< \ell \le 150$ mm. 150 mm. $< \ell \le 300$ mm. $\ell > 300$ mm. For $t_2 \le 0{,}7\ t_1$, $\Delta\sigma_R$ may be increased by one category, but not over 56 (steel) or 20 (Al). If the plate or beam flange is subjected to in-plane bending, $\Delta\sigma_R$ has to be decreased by one category.	56 50 45 40	20 18 16 14
16	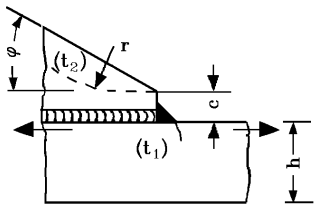	Longitudinal flat side gusset welded on plate edge or beam flange edge, with smooth transition (sniped end or radius); $c \le 2\ t_2$, max. 25 mm. $r \ge 0{,}5\ h$ $r < 0{,}5\ h$ or $\varphi \le 20°$ $\varphi > 20°$ see joint type 15 For $t_2 \le 0{,}7\ t_1$, $\Delta\sigma_R$ may be increased by one category.	50 45	18 16
17	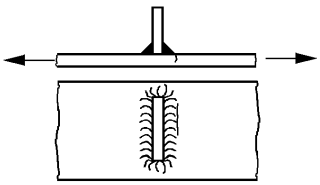	Transverse stiffener with fillet welds (applicable for short and long stiffeners)	80	28
18	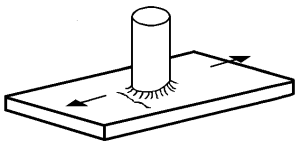	Non-load-carrying shear connector	80	28
19	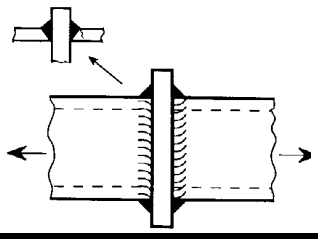	Full penetration weld at the connection between a hollow section (e.g. pillar) and a plate, for tubular section for rectangular hollow section	56 50	20 18

Table 17.3 Catalogue of details *(continued)*

Type No.	Joint configuration showing mode of fatigue cracking and stress σ considered	Description of joint	Detail category $\Delta\sigma_R$	
			Steel	Al
20	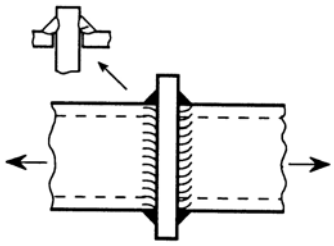	Fillet weld at the connection between a hollow section (e.g. pillar) and a plate, for tubular section for rectangular hollow section The stress is to be related to the weld sectional area.	 45 40	 16 14
21	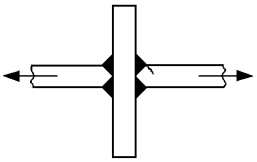	Cruciform or tee-joint K-butt welds with full penetration or with defined incomplete root penetration according to Fig.15.8 cruciform joint tee-joint	 71 80	 25 28
22	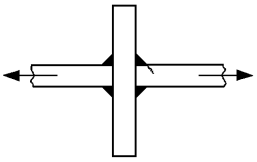	Cruciform or tee-joint with transverse fillet welds, toe failure (root failure particularly for throat thickness a < 0,7· t, see joint type 23) cruciform joint tee-joint	 63 71	 22 25
23	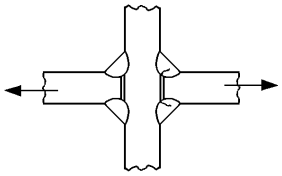	Weld metal in transverse load-carrying fillet welds, at cruciform or tee-joint, root failure (based on stress range in weld throat). See also joint type No.22.	45	16
24	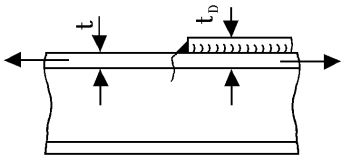	End of long doubling plate on beam, welded ends (bases on stress range in flange at weld toe) $t_D \leq 0{,}8t$ $0{,}8t < t_D \leq 1{,}5t$ $t_D > 1{,}5t$ The following features increase $\Delta\sigma_R$ by one category accordingly: - reinforced ends according to Fig.15.4 - weld toe angle ≤ 30° - length of doubling ≤ 150 mm.	 56 50 45	 20 18 16
25	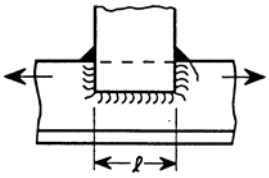	Fillet welded non-load-carrying lap joint welded to longitudinally stressed element. - to bulb section or flat bar - to angle section For ℓ>150 mm, $\Delta\sigma_R$ has to be decreased by one category, while for ℓ≤50 mm, $\Delta\sigma_R$ may be increased by one category. If the component is subjected to bending, $\Delta\sigma_R$ has to be reduced by one category.	 56 50	 20 18

Table 17.3 Catalogue of details *(continued)*

Type No.	Joint configuration showing mode of fatigue cracking and stress σ considered	Description of joint	Detail category $\Delta\sigma_R$	
			Steel	Al
26	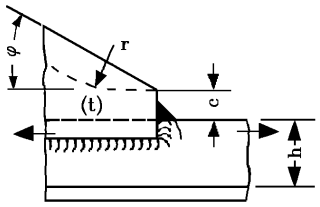	Fillet welded lap joint with smooth transition (sniped end with $\varphi \leq 20°$ or radius) welded to longitudinally stressed element. - to bulb section or flat bat - to angle section $c \leq t$, max. 25 mm.	 56 50	 20 18
27	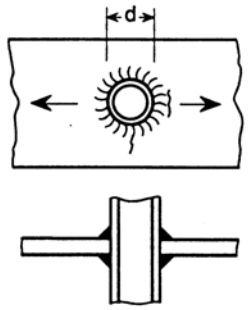	Continuous butt or fillet weld connecting a pipe penetrating through a plate $d \leq 50$ mm. d> 50 mm. ***Remark:*** *For large diameters an assement based on local stress is recommended*	 71 63	 25 22
28	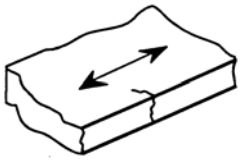	Rolled for extruded plates and sections as well as seamless pipes, no surfaces or rolling defects	160 (m_0=5)	71 (m_0=5)
29	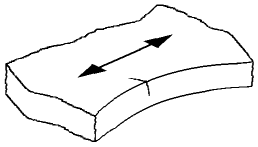	Plate edge sheared or machine-cut by any thermal process with surface free of cracks and notches, corners broken or rounded. Stress increase due to geometry of cut-outs to be considered	140 (m_0=4)	40 (m_0=4)
30	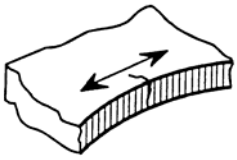	Plate edge not meeting the requirements of type 29, but free of cracks and severe notches. Machine cut or sheared edge: Manually thermally cut: Stress increase due to geometry of cut-outs to be considered.	 125 (m_0=3,5) 100 (m_0=3,5)	 36 (m_0=3,5) 32 (m_0=3,5)
31	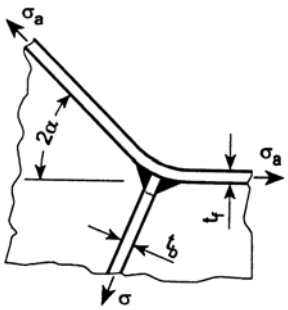	Joint at stiffened knuckle of a flange, to be assessed according to type 21, 22 or 23, depending on the type of joint. The stress in the stiffener at the knuckle can normally be calculated as follows: $\sigma = \sigma_a \frac{t_f}{t_b} 2 \sin\alpha$	-	-

Table 17.3 Catalogue of details *(continued)*

Type No.	Joint configuration showing mode of fatigue cracking and stress σ considered	Description of joint	Detail category $\Delta\sigma_R$	
			Steel	Al
32	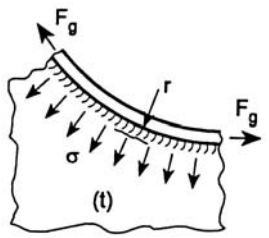	Unstiffened flange to web joint, to be assessed according to type 21, 22 or 23, depending on the type of joint. The stress in the web is calculated using the force F_g in the flange as follows: $\sigma = \frac{F_g}{r \cdot t}$ Furthermore, the stress in longitudinal weld direction has to be assessed according to type 8-10. In case of additional shear or bending, also the highest principal stress may become relevant in the we, see B.1.4.	-	-

Partly based on Recommendations an Fatigue of Welded Components, reproduced from IIW document XIII-1539-96/XV-845-96, by kind permission of the International Institute of Welding.

Joint configuration Loads Locations being at risk for cracks	Description of joint	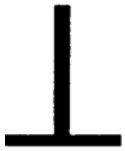	 (1)	 (1)	
		Detail category **$\Delta\sigma_R$** **steel**			
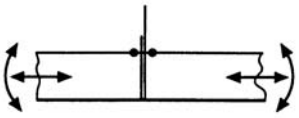	Watertight intersection	80	80	80	80
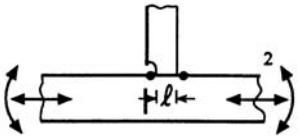	With heel stiffener	45 **(3)** (50) **(3)**	56 **(2)** (50) **(3)**	56 **(3)** (45) **(3)**	63 **(3)**
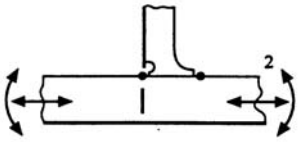	With heel stiffener and integrated bracket	45	56	56	63
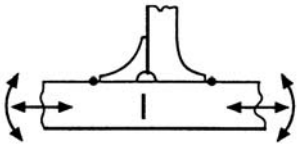	With heel stiffener integrated knee and opposite knee	50 (56)	63 (56)	63 (50)	71
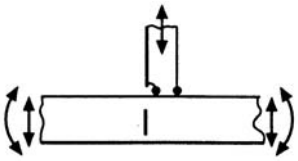	With heel stiffener but without longitudinal stresses	80 **(4)**	71 **(3)** 45 **(5)**	71 **(4)** 45 **(5)**	71 **(4)** 45 **(5)**

( ) *Values for overlapping connection*
(1) *Additional stresses due to asymmetric sections have to be observed, see Section 4, C.6.*
(2) *To be increased by one category, when longitudinal loads only*
(3) *For ℓ>150 mm. to be decreased by one category*
(4) *Stress increase due eccentricity and shape of cut out has to be observed.*
(5) *Valid for stress in fillet weld connection.*

SECTION 18

ANCHORING AND MOORING EQUIPMENT

A. General

1. The equipment of anchors, chain cables, wires and ropes is to be determined from Table 18.1 in accordance with the equipment numeral EN.

Note:

Anchoring equipment required by this Section is intended of temporary mooring of a naval ship within a harbour or sheltered area when the ship is awaiting berth, tide, etc.

The equipment is, therefore, not designed to hold a naval ship off fully exposed coasts in rough weather or to stop a ship which is moving or drifting. In this condition the loads on the anchoring equipment increase to such a degree that its components may be damaged or lost owing to the high energy forces generated, particularly in very large naval ships.

Anchoring equipment required by this Section is designed to hold a naval ship in good holding ground in conditions such as to avoid dragging of the anchor. In poor holding ground the holding power of the anchors will be significantly reduced.

The equipment numeral formula for anchoring equipment required under this Section is based on an assumed current speed of 2,5 m/s, wind speed of 25 m/s and a scope of chain cable between 6 and 10, the scope being the ratio between length of chain paid out and water depth.

It is assumed that under normal circumstances a naval ship will use only one bow anchor and chain cable at a time.

2. Every naval ship is to be equipped with at least one anchor windlass. For bigger naval ships two anchor windlasses are recommended and shall be agreed with the naval authority.

Windlasses and chain stoppers, if fitted, are to comply with Chapter 107 - Ship Operation Installations and Auxiliary Systems, Section 5.

For the substructures of windlasses and chain stoppers, see Section 14, B.4.

3. For naval ships operating not more than 50 nautical miles from a port of refuge and Class Notation **K50/20** assigned equipment may be determined as for one numeral range lower than required in accordance with equipment numeral EN.

4. Naval ships built under survey of TL and which are to have the mark * stated in their Certificate and in the Register Book, must be equipped with anchors and chain cables complying with the TL Rules, Chapter 2 – Materials, Section 11 – Equipment. For non-magnetizable materials the TL Rules, Chapter 103 Materials for Naval Ships apply. Anchors and chain cables have to be tested on approved machines in the presence of a TL Surveyor.

5. For naval ships having three or more propellers, a reduction of the weight of the bower anchors and the chain cables may be considered.

B. Equipment Numeral

1. Monohull ships

For monohull naval ships the equipment numeral is to be calculated as follows:

$$EN = \Delta^{2/3} + 2(a \cdot \mathbf{B} + \Sigma\, b_i \cdot h_i \cdot \sin \Theta_i) + 0{,}1 \cdot A$$

Δ = the moulded displacement [t] at the design waterline in sea water having a density of 1,025 t/m^3

a = distance [m], from design waterline, amidships, to the upper deck at side

b_i = actual breadth of deckhouses with a breadth greater **B**/4

h_i = height [m] on the centreline of each tier of superstructures and deckhouses corresponding to b_i (deck sheer, if any, is to be ignored)

For the lowest tier "h" is to be measured at centreline from the upper deck or from a notional deck where there is local discontinuity in the upper deck.

Θ_i = angle of inclination of each front bulkhead, as shown in Fig. 18.1

A = area [m^2], in profile view of the hull, superstructures and deck houses, having a breadth greater than **B**/4, above the design waterline within the length **L** and up to the height a + Σh_i

Where a deckhouse having a breadth greater than **B**/4 is located above a deckhouse having a breadth of **B**/4 or less, the wider house is to be included and the narrower house ignored.

Screens of bulwarks 1,5 m or more in height above the deck at side are to be regarded as parts of houses when determining h and A, e.g. the areas specially marked in Fig. 18.1 are to be included in A.

2. Multihull ships

For multihull naval ships the equipment numeral has to be defined in analogous way, details are given in the TL Rules – Chapter 7, High Speed Craft.

C. Anchors

1. Arrangement

The two rule bower anchors are to be connected to their chain cables and positioned on board ready for use. It is to be ensured that each anchor can be stowed in the hawse and hawse pipe in such a way that it remains firmly secured in seagoing conditions. Details have to be coordinated with the naval authority.

2. Anchor design

2.1 Anchors must be of approved design. The mass of the heads of patent (ordinary stockless) anchors, including pins and fittings, is not to be less than 60 per cent of the total mass of the anchor.

2.2 For stock anchors, the total mass of the anchor, including stock, shall comply with the values in Table 18.1. The mass of the stock shall be 20 per cent of this total mass.

2.3 The mass of each individual bower anchor may vary by up to 7 per cent above or below the required individual mass provided that the total mass of all the bower anchors is not less than the sum of the required individual masses.

3. High holding power anchors

3.1 Where special anchors are approved by TL as "High Holding Power Anchors" (HHP), the anchor mass may be 75 per cent of the anchor mass as per Table 18.1

"High Holding Power Anchors" are anchors which are. suitable for the naval ship's use at any time and which do not require prior adjustment or special placement on sea bed.

3.2 For approval as a "High Holding Power Anchor", satisfactory tests are to be made on various types of bottom and the anchor is to have a holding power at least twice that of a patent anchor ("Admiralty Standard Stockless") of the same mass. The tests have to be approved by TL.

3.3 Dimensioning of the chain cable and of the windlass is to be based on the undiminished anchor mass according to Table 18.1.

4. Very high holding power anchors

Where special anchors are approved by TL as "Very High Holding Power Anchors" (VHHP), the anchor mass may be not less than 2/3 of the mass required for the HHP anchor it replaces.

5 Stern anchors

5.1 Where stern anchors are fitted as stream anchors, such equipment is to comply in all respects with the rules for anchor equipment. The mass of each stern anchor shall be at least 35 per cent of that of the bower anchors. The diameter of chain cables and the chain length is to be determined from Table 18.1 in accordance with anchor mass. Where a stern anchor windlass is fitted, the requirements of Chapter 107 - Ship Operation Installations and Auxiliary Systems, Section 5 are to be observed.

5.2 Where a steel wire rope is to be used for the stern anchor instead of a chain cable the following has to be observed:

5.2.1 The steel wire rope must at least be as long as the required chain cable. The strength of the steel wire rope must at least be of the value for the required chain of grade K 1.

5.2.2 Between anchor and steel wire rope a shot of 12,5 m in length or of the distance between stowed anchor and windlass must be provided. The smaller length has to be taken.

5.2.3 A cable winch must be provided according to the requirements for windlasses in Chapter 107 – Ship Operation Installations and Auxiliary Systems, Section 5..

6. Special stern anchors

Special stern anchors of considerable size may be used to tow back a landing ship, which is touching the beach with its forward bottom, to deeper water after the troops are embarked or landed.

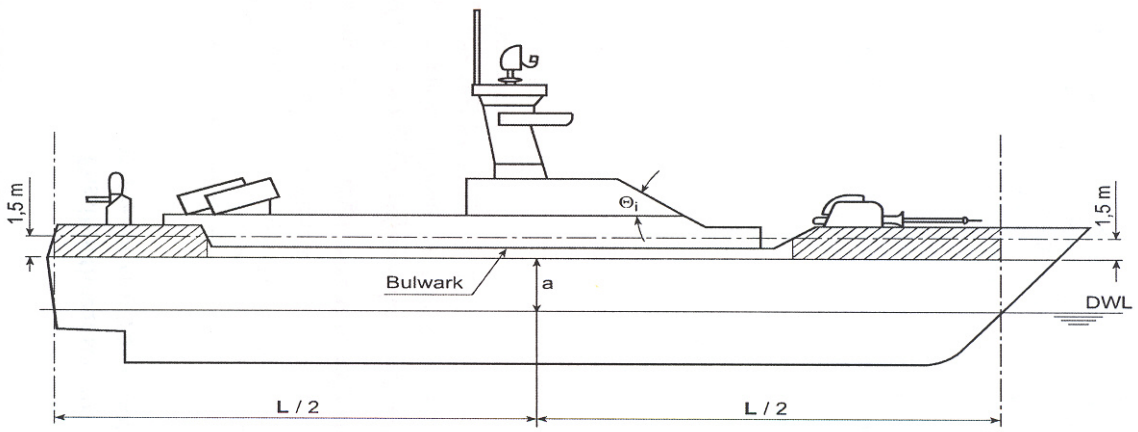

Fig. 18.1 Profile view of hull, superstructure and deckhouses relevant for the equipment numeral

At least for medium sized and large landing ships it is recommended to provide two anchors in a symmetric arrangement, to be able to tow the ship back more or less along its longitudinal axis.

The size of anchors and the arrangement of towing winches in relation to ship displacement, draught/ water depth assumed, landing procedure, etc., has to be defined according to the specification of the Naval Authority.

D. Chain Cables

1. Chain cable diameters given in Table 18.1 apply to chain cables made of chain cable materials specified in the requirements of the TL Rules, Chapter 2 Materials, Section 11 – Equipment for the following grades:

- Grade K 1 (ordinary quality)
- Grade K 2 (special quality)
- Grade K 3 (extra special quality)

For HHP anchors at least chain cables of grade K 2, for VHHP anchors chain cables of grade K 3 shall be provided.

Grade K 2 and K 3 chain cables must be purchased from and post production quenched and tempered by recognized manufacturers only.

2. If the magnetic signature of naval ships has to be kept low, the use of non-magnetizable austenitic steel as defined in Section 3 is preferable for anchors and chain cables, see also the TL Rules Chapter 103 - Special Materials for Naval Ships, Sections 8 and 9.

3. Chain cables without stud links may be used for naval ships of limited size. The correlation to the values of Table 18.1 has to be approved by TL.

4. The total length of chain given in Table 18.1 is to be divided in approximately equal parts between the two bower anchors.

5. For connection of the anchor with the chain-cable approved Kenter-type anchor shackles may be chosen in lieu of the common Dee-shackles. A fore-runner with swivel is to be fitted between anchor and chain cable. In lieu of a forerunner with swivel an approved swivel shackle may be used. However, swivel shackles are not to be connected to anchor shank unless specially approved.

6. Upon request and agreement with TL steel wire and synthetic wire ropes may be used as an alternative to the chain cables defined in Table 18.1 for naval ships of limited size.

7. The attachment of the inboard ends of chain cables to the ship's structure is to be provided with means suitable to permit, in case of emergency, an easy slipping of chain cables to sea operable from an accessible position outside the chain locker.

The inboard ends of the chain cables are to be secured to the structures by a fastening device able to withstand a force not less than 15 % but not more than 30 % of the rated breaking load of the chain cable

E. Chain Locker

1. The chain locker is to be of capacity and depth adequate to provide an easy direct lead of the cables through the chain pipes and self-stowing of the cables.

The minimum required stowage capacity without mud box for the two bow anchor chains is as follows:

$$S = 1{,}1 \cdot d^2 \cdot \frac{\ell}{100\,000} \quad [m^3]$$

d = chain diameter [mm] according to Table 18.1

ℓ = total length of stud link chain cable according to Table 18.1

The total stowage capacity is to be distributed on two chain lockers of equal size for the port and starboard chain cables. The shape of the base areas shall as far as possible be quadratic with a maximum edge length of 33 d. As an alternative, circular base areas may be selected, the diameter of which shall not exceed 30 -35 d.

Above the stowage of each chain locker in addition a free depth of

$$h = 1500 \quad [mm]$$

is to be provided, where practicable.

2. The chain locker boundaries and their access openings are to be watertight to prevent flooding of adjacent spaces, where essential installations or equipment are arranged, in order to not affect the proper operation of the ship after accidental flooding of the chain locker.

3. Adequate drainage facilities of the chain locker are to be provided.

4. Where the chain locker boundaries are also tank boundaries their scantlings of stiffeners and plating are to be determined as for tanks in accordance with Section 10, B.

Where this is not the case, plate thickness and section modulus are to be determined according to Section 10, B. for the test pressure p_{T2} according to Section 10, D. 4. The distance from the load centre to the top of chain locker pipe is to be taken for calculating the load.

A corrosion addition of 2,0 mm has to be applied. The minimum thickness of plating is 5,0 mm.

F. Mooring and Towing Equipment

1. Mooring Lines and Towing Lines

1.1 The mooring lines and towing line are given in Table 18.1 and are based in an equipment number EN calculated in compliance with B.1.

1.2 The towing lines given in col. 8 of Table 18.1 are intended as own towline of a ship to be towed by a tug or other ship.

1.3 Mooring lines and towing lines are given as guidance only.

2. Specifications of Mooring and Towing Ropes

2.1 Mooring lines and towlines may be of steel wire, natural fibre or synthetic fibre construction or of a mixture of steel wire and fibre. The lengths of individual mooring ropes may be reduced by up to 7% of the table length, provided that the total length of mooring ropes is not less than would have resulted had all ropes been of equal length.

2.2 Notwithstanding the strength requirements given in Table 18.1, no fibre rope is to be less than 20 mm diameter.

Table 18.1 Anchors, chain cables and ropes

Equipment numeral EN	2 stock-less bower anchors	Stud link chain cables				Chain cables	Recommended ropes				
		Bower anchors					Towline		Mooring ropes		
	Mass per anchor	Total length	Diameter (1)				Length	Breaking load	Number	Length	Breaking load
			d_1	d_2	d_3	d_4					
	[kg]	[m]	[mm]	[mm]	[mm]	[mm]	[m]	[kN]	-	[m]	[kN]
1	**2**	**3**	**4**	**5**	**6**	**7**	**8**	**9**	**10**	**11**	**12**
-50	120	165	12.5	12.5	12.5	12.5	180	100	3	80	35
50-70	180	220	14	12.5	12.5	14	180	100	3	80	35
70-90	240	220	16	14	14	16	180	100	3	100	40
90-110	300	247.5	17.5	16	16	18	180	100	3	110	40
110-130	360	247.5	19	17.5	17.5	18	180	100	3	110	45
130-150	420	275	20.5	17.5	17.5	20	180	100	3	120	50
150-175	480	275	22	19	19	22	180	100	3	120	55
175-205	570	302.5	24	20.5	20.5	24	180	110	3	120	60
205-240	660	302.5	26	22	20.5	26	180	130	4	120	65
240-280	780	330	28	24	22	28	180	150	4	120	70
280-320	900	357.5	30	26	24	30	180	175	4	140	80
320-360	1020	357.5	32	28	24	30	180	200	4	140	85
360-400	1140	385	34	30	26	32	180	225	4	140	95
400-450	1290	385	36	32	28	34	180	250	4	140	100
450-500	1440	412.5	38	34	30	36	190	275	4	140	110
500-550	1590	412.5	40	34	30	38	190	305	4	160	120
550-600	1740	440	42	36	32	40	190	340	4	160	130
600-660	1920	440	44	38	34	42	190	370	4	160	145
660-720	2100	440	46	40	36	44	190	405	4	160	160
720-780	2280	467.5	48	42	36	46	190	440	4	170	170
780-840	2460	467.5	50	44	38	48	190	480	4	170	185
840-910	2640	467.5	52	46	40	48	190	520	4	170	200
910-980	2850	495	54	48	42	50	200	560	4	170	215
980-1060	3060	495	56	50	44	-	200	600	4	180	230
1060-1140	3300	495	58	50	46	-	200	645	4	180	250
1140-1220	3540	522.5	60	52	46	-	200	690	4	180	270
1220-1300	3780	522.5	62	54	48	-	200	740	4	180	285
1300-1390	4050	522.5	64	56	50	-	200	785	4	180	305
1390-1480	4320	550	66	58	50	-	220	835	4	180	325
1480-1570	4590	550	68	60	52	-	220	890	5	190	325
1570-1670	4890	550	70	62	54	-	220	940	5	190	335
1670-1790	5250	577.5	73	64	56	-	220	1025	5	190	350
1790-1930	5610	577.5	76	66	58	-	220	1110	5	190	375
1930-2080	6000	577.5	78	68	60	-	240	1170	5	190	400
2080-2230	6450	605	81	70	62	-	240	1260	5	200	425
2230-2380	6900	605	84	73	64	-	240	1355	5	200	450
2380-2530	7350	605	87	76	66	-	260	1455	5	200	480
2530-2700	7800	632.5	90	78	68	-	260	1470	6	200	480
2700-2870	8300	632.5	92	81	70	-	260	1470	6	200	490
2870-3040	2870-30	632.5	95	84	73	-	280	1470	6	200	500
3040-3210	9300	660	97	84	76	-	280	1470	6	200	520
3210-3400	9900	660	100	87	78	-	280	1470	6	200	555
3400-3600	10500	660	102	90	78	-	300	1470	6	200	590
3600-3800	11100	687.5	105	92	81	-	300	1470	6	200	620
3800-4000	11700	687.5	107	95	84	-	300	1470	6	200	650

(1) *d_1 = Chain diameter Grade K 1 (Ordinary quality)*
d_2 = Chain diameter Grade K 2 (Special quality)
d_3 = Chain diameter Grade K 3 (Extra special quality)
d_4 = Chain diameter for non-magnetizable austenitic steel (WN 1.3964)

2.3 Wire ropes

2.3.1 Where wire ropes are used, they are to be of a flexible construction with not less than:

- 72 wires in 6 strands with 7 fibre cores for the loads up to 216 kN
- 144 wires in 6 strands with 7 fibre cores for the loads of 216 kN to 490 kN
- 216 wires in 6 strands with 1 fibre cores for loads exceeding 490 kN.

2.3.2 Tensile strength of wires for wire rope mooring lines is to be within the following ranges:

1420 - 1570 N/mm^2
1570 - 1770 N/mm^2
1770 - 1960 N/mm^2

2.3.3 Wire ropes for use in association with mooring winches where the rope is to be stored on the drum may be constructed with an independent wire rope core instead of fibre core.

2.4 The required diameters of synthetic fibre ropes used in lieu of steel wire ropes may be taken from Table 18.2.

G. Shipboard Fittings and Supporting Hull Structures Associated With Mooring and Towing

1. Mooring

1.1 Strength

The strength of shipboard fittings used for mooring operations and their supporting hull structures are to comply with the requirements of this subsection.

1.2 Arrangement

Shipboard fittings for mooring are to be located on longitudinal, beams and/or girders, which are part of the deck construction so as to facilitate efficient distribution of the mooring load. Other arrangements may be accepted (for Panama chocks, etc.) provided the strength is confirmed adequate for the service.

1.3 Load considerations

1.3.1 Unless greater safe working load (SWL) of shipboard fittings is specified by the applicant, the design load applied to shipboard fittings and supporting hull structures is to be 1.25 times the breaking strength of the mooring line according to Table 18.1.

Note :

Side projected area including maximum stacks of deck cargoes is to be taken into account for assessment of lateral wind forces, arrangements of tug boats and selection of mooring lines.

1.3.2 The design load applied to supporting hull structures for winches, etc. is to be 1.25 times the intended maximum brake holding load and, for capstans, 1.25 times the maximum hauling-in force.

1.3.3 The design load is to be applied through the mooring line according to the arrangement shown on the towing and mooring arrangement plans.

1.3.4 The method of application of the design load to the fittings and supporting hull structures is to be taken into account such that the total load need not be more than twice the design load specified in 1.3.1 above, i.e. no more than one turn of one line (see figure 18.2).

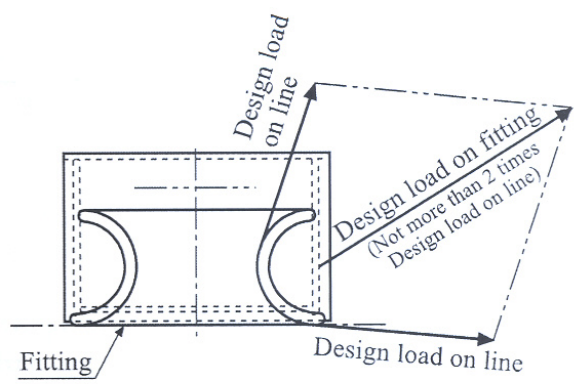

Figure 18.2 Application of design loads

Table 18.2 Equivalent diameters of synthetic wire and fibre ropes

Steel wire ropes (1)	Synthetic wire ropes	Fibre ropes		
	Polyamide (2)	Polyamide	Polyester	Polypropylene
Diameter [mm]	Diameter [mm]	Diameter [mm]	Diameter [mm]	Diameter [mm]
12	30	30	30	30
13	30	32	32	32
14	32	36	36	36
16	32	40	40	40
18	36	44	44	44
20	40	48	48	48
22	44	48	48	52
24	48	52	52	56
26	56	60	60	64
28	60	64	64	72
32	68	72	72	80
36	72	80	80	88
40	72	88	88	96

(1) *According to DIN 3068 or similar*

(2) *Regular laid ropes of refined polyamide monofilaments and filament fibres*

1.3.5 When a specific SWL is applied for a shipboard fitting at the request of the applicant, by which the design load will be greater than the above minimum values, the strength of the fitting is to be designed using this specific design load.

1.4 Shipboard fittings

The selection of shipboard fittings is to be made by the shipyard in accordance with an industry standard (e.g. ISO 13795 Ships and marine technology – Ship's mooring and towing fittings – Welded steel bollards for sea-going vessels) accepted by **TL**. When the shipboard fitting is not selected from an accepted industry standard, the design load used to assess its strength and its attachment to the ship is to be in accordance with 1.3.

1.5 Supporting hull structure

1.5.1 Arrangement

Arrangement of the reinforced members beneath shipboard fittings is to consider any variation of direction (horizontally and vertically) of the mooring forces (which is to be not less than the design load as per 1.3) acting through the arrangement of connection to the shipboard fittings.

1.5.2 Acting point of mooring force

The acting point of the mooring force on shipboard fittings is to be taken at the attachment point of a mooring line or at a change in its direction.

1.5.3 Allowable stresses

Allowable stresses under the design load conditions as specified in 1.3 are as follows:

Normal stress: 100% of the specified minimum yield point of the material.

Shearing stress: 60% of the specified minimum yield point of the material.

No stress concentration factors being taken into account. Normal stress is the sum of bending stress

and axial stress with the corresponding shearing stress acting perpendicular to the normal stress.

1.6 Safe working load (SWL)

1.6.1 The SWL is not to exceed 80% of the design load per 1.3.

1.6.2 The SWL of each shipboard fitting is to be marked (by weld bead or equivalent) on the deck fittings used for mooring.

1.6.3 The above requirements on SWL apply for a single post basis (no more than one turn of one cable).

1.6.4 The towing and mooring arrangements plan mentioned in **3.** is to define the method of use of mooring lines.

1.7 Net thickness (t_{net})

Strength calculations for supporting hull structures of mooring equipment are to be based on net thicknesses.

$t_{net} = t - t_k$

t_k = Corrosion addition according to G.4.

2. Towing

2.1 Strength

The strength of shipboard fittings used for normal towing operations at bow, sides and stern and their supporting hull structures are to comply with the requirements of this subsection.

2.2 Shipboard fittings for towing are to be located on longitudinals, beams and/or girders, which are part of the deck construction so as to facilitate efficient distribution of the towing load. Other arrangements may be accepted (for Panama chocks, etc.) provided the strength is confirmed adequate for the intended service.

2.3 Load considerations

Unless greater safe working load (SWL) of shipboard fittings is specified by the applicant, the minimum design load to be used is the following value of 2.3.1 or 2.3.2, whichever is applicable:

2.3.1 For normal towing operations (e.g. harbour) 1.25 times the intended maximum towing load (e.g. static bollard pull) as indicated on the towing and mooring arrangements plan.

2.3.2 For other towing service (e.g. escort), the nominal breaking strength of the tow line according to Table 18.1 for the equipment numeral EN.

Note:

Side projected area including maximum stacks of deck cargoes is to be taken into account for assessment of lateral wind forces, arrangements of tug boats and selection of towing lines.

2.3.3 The design load is to be applied through the tow line according to the arrangement shown on the towing and mooring arrangements plan.

2.3.4 The method of application of the design load to the fittings and supporting hull structures is to be taken into account such that the total load need not be more than twice the design load (see figure 18.2).

2.3.5 When a specific SWL, is applied for a shipboard fitting at the request of the applicant, by which the design load will be greater than the above minimum values, the strength of the fitting is to be designed using this specific design load.

2.3.6 Ships complying with the requirements of this section will be eligible to be classed with the notation **TA1**, **TA2** or **TA3**.

2.3.7 **TA1**, **TA2** and **TA3** notations will be assigned when an appraisal has been made of the towing arrangements and strength performance of the supporting structures in accordance with the Rules for considering the severe weather conditions, see Beaufort scale given in Table 18.3.

2.3.8 These three levels of towing arrangements in 2.3.7 recognise towing a ship of similar displacement at 6 knots in defined environmental conditions.

2.3.9 In case of alternative requirements to the breaking load of the towing hawser required by 2.3.14.1 are specified, and have been complied with, the ship will be entitled to the notation **TA(NS)**. These alternative requirements are to be clearly defined and referenced in the Certificate of Class. The load specified in the alternative is to replace the BL value given by the expression in 2.3.14.1.

2.3.10 Where the towline complies with the strength requirements of Table 18.1 as applicable to merchant ships for the related equipment number, the ship will be entitled to the assignment of the **TA(S)** notation. The breaking load specified in Table 18.1 is to replace the BL value given by the expression in 2.3.14.1.

2.3.11 Towing operations are to be in accordance with the towing, mooring and arrangements plan or equivalent information which is required to be placed on board. See 2.3.12.

Table 18.3 Design weather factors / Environmental conditions

Applicable notation	Wind speed coefficient, C_{mw}	Weather factor, K	Beaufort Scale	Equivalent Mean Wind Speed (knots)
TA1	0,0150	8	10+	48+
TA2	0,0129	7,2	9	41-47
TA3	0,0108	6,3	8	34-40

2.3.12 Information Required

2.3.12.1 Plans are to be of sufficient detail for plan approval purposes. Plans covering the following items are to be submitted for approval:

- Strong points, bollards and fairleads, see 2.3.13.7.
- Support structure and foundations of towing equipment.

2.3.12.2 The towing arrangement plan is to be submitted for information. It is to include the following in respect of each shipboard fitting:

- Location on the ship.
- Fitting type.
- Safe working load (SWL).
- Manner of applying towing line load, including limiting fleet angles.

The towing arrangement plan is to be provided on board the ship for the guidance of the Master.

2.3.13 Towing Arrangements

2.3.13.1 A towing arrangement is to be provided at both the fore and aft end of the ship.

2.3.13.2 The fixed towing equipment is to comprise a securing arrangement which is a strong point and may be in the form of a stopper bollard, bracket, deck clench or towing slip. A fairlead, rollers or other appropriate towline guides as necessary are to be included in the arrangement.

2.3.13.3 Loose towing equipment is to comprise a towing hawser and a towing pennant. The towing pennant may comprise a length of chafing chain. In the absence of a length of chafing chain suitable arrangements (e.g. a low friction sheath) are to be provided.

2.3.13.4 Fairleads and guides are to be designed so as to prevent excessive bending stress in the towing hawser, towing pennant or chafing chain, whichever is applicable. The bending ratio of the guides bearing surface to the diameter of the applicable towline element is not to be less than 7 to 1. For fibre rope towing hawsers and towing pennants the bending ratio is to comply with the rope manufacturer's specification.

2.3.13.5 The fairlead or guide is to have an opening large enough to allow the passage of the largest element of the loose towing equipment.

2.3.13.6 The fairlead or guide is to be fitted as close to the deck as practicable and in a position so that the tow will be approximately parallel to the deck when under tension between the strong point and the guide.

2.3.13.7 The selection of shipboard fittings is to be made by the shipyard in accordance with an acceptable National or International standard. If the shipboard fitting is not selected from an acceptable National or International standard then the design load used to assess its strength and its attachment to the ship is to be in accordance with the design load given in 2.3.14.3. The design is to be submitted for approval.

2.3.13.8 Deck fittings and strong points are to be located on longitudinals, beams and/or girders, which are part of the deck construction so as to facilitate efficient distribution of the towing load. Other equivalent arrangements will be considered, providing the strength is confirmed as adequate for the intended use.

2.3.13.9 To avoid chafing, the arrangement is to be designed so that no element of the loose towing equipment, when under tension, is to contact with the ship's hull at any point other than those specified as a securing arrangement, fairlead or guide. The final point of contact of the towline with the ship is to be positioned as close as practicable to the centre line so as to reduce the adverse effect on manoeuvrability.

2.3.13.10 The chafing arrangement is to extend a minimum of 3 m outboard of the fairlead or guide when in the deployed position and 2 m inboard.

2.3.13.11 The loose towing equipment is to be located as near as practicable to the strong point and is to be designed to be capable of being rigged and deployed in the absence of power. It is recommended that extra loose gear meeting the requirements of this Section be carried on board to provide for redundancy.

2.3.13.12 The minimum length of the towing hawser is to be as given in Table 18.1.

2.3.13.13 The SWL of each shipboard fitting is to be clearly marked, by weld bead or equivalent, on each of the fittings used for towing, see 2.3.14.10.

2.3.14 Strength Requirements for Towing Arrangements

2.3.14.1 The minimum Breaking Load (hereinafter referred to as BL), of the towing hawser carried on board the ship is assessed, in tonnes, is not to be less than that calculated below:

$$BL = (0{,}03\Delta^{2/3} + (C_{mw}A_t))\,K$$

where

Δ = displacement, in tonnes, to the deep draught waterline

C_{mw} = wind speed coefficient, which is to be taken from Table 18.3 for the relevant notation

K = weather factor, which is to be taken from Table 18.3 for the relevant notation

A_t = transverse projected area, in m^2, of the hull and of all superstructures, houses, masts, etc. above the design draught

2.3.14.2 The strength of other loose towing equipment e.g., links, shackles rings and chafing chain is to be determined on the basis of a design load equal to 1,25 times the BL of the towing hawser.

2.3.14.3 The strength of shipboard fittings and their supporting structure is to be determined on the basis of a design load equal to 1,25 times the BL of the towing hawser. The design load is to be applied through the towline according to the arrangement shown on the towing arrangement plan. The point of action of the force on the fitting is to be taken as the point of attachment of the mooring line or towline or at a change in its direction. The total design load applied to a fitting need not be more than twice the design load, see Figure 18.2.

2.3.14.4 The stress in all loose and fixed towing equipment constructed of steel, and its supporting

structure, is not to exceed the specified minimum yield stress of the material in bending and 60 per cent of the specified minimum yield stress of the material in shear. Special consideration will be given if the vessel and/or towing equipment is not constructed of steel.

2.3.14.5 The reinforced members (carling) beneath shipboard fittings are to be effectively arranged for any variation of direction (horizontally and vertically) of the towing forces (which is to be not less than the design load) acting through the arrangement of connection to the shipboard fittings. Other arrangements will be specially considered provided that the strength is confirmed as adequate for the service.

2.3.14.6 For the assessment of fairleads and their supporting structure, due consideration is to be given to lateral loads. The strength of the fairlead is to be sufficient for all angles of towing load up to 90° horizontally from the ship's centreline and 30° vertically from the horizontal plane.

2.3.14.7 For the assessment of a strong point and its supporting structure, the applied load is to be in the direction that the towing pennant or towing hawser will take up during normal deployment. It is also to be applied at the maximum height possible above the deck for that specific type of strong point.

2.3.14.8 The structural arrangements of strong points, bollards and fairleads are to be such that continuity will be ensured. Abrupt changes in section; sharp corners and other points of stress concentration are to be avoided.

2.3.14.9 Strong points are to be fitted in way of a transverse or longitudinal deck girder or beam to facilitate efficient distribution of the towing load.

2.3.14.10 The SWL of each towing arrangement component is to be no greater than 80 per cent of the design load applied.

2.4 Shipboard fittings

The selection of shipboard fittings is to be made by the shipyard in accordance with an industry standard (e.g. ISO 13795 Ships and marine technology – Ship's mooring and towing fittings – Welded steel bollards for sea-going vessels) accepted by **TL**. When the shipboard fitting is not selected from an accepted industry standard, the design load used to assess its strength and its attachment to the ship is to be in accordance with 2.3.

2.5 Supporting hull structure

2.5.1 Arrangement

The reinforced members beneath shipboard fittings are to be effectively arranged for any variation of direction (horizontally and vertically) of the towing forces (which is to be not less than the design load as per 2.3) acting through the arrangement of connection to the shipboard fittings.

2.5.2 Acting point of towing force

The acting point of the towing force on shipboard fittings is to be taken at the attachment point of a towing line or at a change in its direction.

2.5.3 Allowable stresses

Allowable stresses under the design load conditions as specified in 2.3 are as follows:

Normal stress: 100% of the specified minimum yield point of the material.

Shearing stress: 60% of the specified minimum yield point of the material.

No stress concentration factors being taken into account. Normal stress is the sum of bending stress and axial stress with the corresponding shearing stress acting perpendicular to the normal stress.

2.6 Safe working load (SWL)

2.6.1 The SWL used for normal towing operations is not to exceed 80% of the design load per 2.3.1 and SWL used for other towing operations is not to exceed the design load per 2.3.2. For fittings used both normal

and other towing operations, the greater of the design loads of 2.3.1 and 2.3.2 is to be used.

2.6.2 The SWL of each shipboard fitting is to be marked (by weld bead or equivalent) on the deck fittings used for towing.

2.6.3 The above requirements on SWL apply for a single post basis (no more than one turn of one cable).

2.6.4 The towing and mooring arrangements plan mentioned in **3.** is to define the method of use of towing lines.

3. Towing and Mooring Arrangements Plan

3.1 The SWL for the intended use for each shipboard fitting is to be noted in the towing and mooring arrangements plan available on board for the guidance of the Master.

3.2 Information provided on the plan is to include in respect of each shipboard fitting:

- Location on the ship,
- Fitting type,
- SWL,
- Purpose (mooring/harbour towing/escort towing); and,
- Manner of applying towing or mooring line load including limiting fleet angles.

This information is to be incorporated into the pilot card in order to provide the pilot proper information on harbour/escorting operations.

4. Corrosion Addition

The total corrosion addition, t_K, in mm. for both sides of the hull supporting structure is not to be less than 2,0 mm.

5. Surveys After Construction

The condition of deck fitting, their pedestals, if any, and the hull structures in the vicinity of the fittings are to be examined in accordance with **TL** Rules. The wastage allowances as specified by **TL** Rules are not to exceed the corrosion addition as specified in 4.

SECTION 19

HULL OUTFIT

A. Partition Bulkheads

1. Gastight partitions

Not withstanding the ability of the ship to meet the requirements for NBC-protection, spaces, which are to be accessible for the service of the naval ship, such as spaces for storage, hangars, docks, etc. as well as accommodation spaces are to be gastight against each other.

2. Partition bulkheads between engine and boiler rooms

2.1 Rooms for auxiliary boilers are to be separated generally from adjacent engine rooms by bulkheads. Where these bulkheads are watertight or tank bulkheads, their scantlings must comply with Section 9 or 10 respectively.

2.2 The bilges are to be separated from each other in such a way that no oil can pass from the boiler room bilge to the engine room bilge. Bulkhead openings are to have hinged doors.

2.3 Where a close connection between engine and boiler room is advantageous in respect of supervision and safety, complete bulkheads may be dispensed with, provided the conditions given in Chapter 104 - Propulsion Plants and Chapter 107 - Ship Operation Installations and Auxiliary Systems, Section 15 are complied with.

B. Breakwater

1. Design references

The scantlings of the breakwater are to be designed like unprotected front walls according to Section 9, C. with loads according to Section 5, C.1.1.2.

C. Sheathings and Ceilings

1. Deck sheathings

1.1 General requirements

1.1.1 Generally the different deck sheatings of a naval ship on the weather deck, on superstructures and deckhouses have to meet the following requirements:

- Protection of the hull structure against corrosion in a standard climate defined by the Naval Authority e.g. in Europe for temperatures from -20 °C to +80 °C
- Good connection to the deck area fire-resistant or at least not easily flammable
- Special requirements of the Naval Authority, like colour, etc.

1.1.2 Before establishing the deck sheathing, the structural material, on which the sheathing will be brought up, has to be prepared according to the specification of the supplier. Normally this will include cleaning, grinding, degreasing, etc.

1.1.3 The compliance with the requirements defined in 1.1.1 has to be shown by the supplier by tests with a reasonable number of specimens according to recognized standards and approved by **TL**. The samples have to be brought up on the relevant structural deck material utilized for the naval ship like steel, aluminium, wood, GRP, etc.

1.2 Decks for aircraft operation and helicopter landing

The special, additional requirements for flight decks are specified in Section 23, B.5.1.

1.3 Missile starting positions

The blast of rockets and missiles may influence the deck sheathing during the launch in the following way:

- High temperature of blast cone
- Efflux blast loading and blast speed
- Chemical composition of efflux and particles contained

The sheathing has to comply with the general requirements defined in 1.1.1. In addition, the thickness of the sheathing/cover has to be evaluated for the so called "hang fire" condition, when the motor of a missile ignites and burns out, but - by defect - does not leave the starting ramp.

2. Bottom ceiling

2.1 If a naval ship contains holds for the transport of materials or special equipment a tight bottom ceiling is to be fitted on the bottom of such a hold. It is recommended, that the thickness of a wooden ceiling is not less than 60 mm. If no ceiling is foreseen, TL will decide whether the thickness of the load bearing bottom areas has to be increased case by case.

2.2 On single bottoms, ceilings are to be removable for inspection of bottom plating at any time.

2.3 Ceilings on double bottoms are to be laid on battens not less than 12,5 mm thick, providing a clear space for drainage of water or leakage oil. The ceiling may be laid directly on the inner bottom plating, if embedded in preservation and sealing compound.

2.4 It is recommended to fit double ceilings under deck openings used for loading/unloading.

2.5 The manholes are to be protected by a steel coaming welded around each manhole and shall be fitted with a cover of wood or steel, or by other suitable means.

3. Ceilings at tank bulkheads

Where tanks are intended to carry liquids at temperatures exceeding 40 °C, their boundaries facing holds for transport or storage shall be fitted with a ceiling. At vertical walls, sparred ceilings may be sufficient. The ceiling may be dispensed only with consent of the Naval Authority.

D. Openings in Hull and Superstructures

1. Openings in closed superstructures

1.1 All access openings in end bulkheads and walls of closed superstructures shall be fitted with weathertight doors permanently attached to the bulkhead, having the same strength as the bulkhead.

The doors shall be so arranged that they can be operated from both sides of the bulkhead. Doors should generally open outwards to provide additional safety against the impact of the sea. Doors which open inwards are to be especially approved by TL.

The coaming heights of the access openings above the deck are to be at least 600 mm in Pos. 1, see Section 14, A.2 and 380 mm in Pos. 2. Openings to deck - houses without access to spaces below the freeboard/bulkhead deck may have lower coamings.

1.2 Portable sills should be avoided. However in order to facilitate loading/unloading of heavy equipment, spare parts, etc., portable sills may be fitted under following conditions:

- They must be installed before the naval ship leaves the basis or any port
- Sills are to be gasketed and fastened by closely spaced through bolts
- Whenever sills are replaced after removal water-tightness of the sills and the related doors must be verified by hose testing. The date of replacing and testing shall be recorded in the ship's log book

1.3 Any opening in a superstructure deck or in a deck directly above the freeboard deck like deckhouse surrounding companionways, is to be protected by efficient weathertight closures.

2. Side scuttles and windows

2.1 General

2.1.1 Side scuttles and windows, together with their glasses, deadlights and storm covers (**1**), if fitted, shall be of an approved design and substantial construction. Non-metallic frames are not acceptable.

2.1.2 Side scuttles are defined as being round or oval openings with an area not exceeding 0,16 m^2. Round or oval openings having areas exceeding 0,16 m^2 shall be treated as windows.

2.1.4 Side scuttles to the following spaces shall be fitted with hinged inside deadlights:

– Spaces below freeboard deck

– Spaces within the first tier of enclosed superstructures

– First tier deckhouses on the freeboard deck protecting openings leading below or considered buoyant in stability calculations

Deadlights shall be capable of being closed and secured watertight if fitted below the freeboard deck and weathertight if fitted above.

2.1.5 Side scuttles shall not be fitted in such a position that their sills are below a line drawn parallel to the freeboard deck at side and having its lowest point 2.5 % of the breadth **B**, or 500 mm, whichever is the greatest distance, above the Summer Load Line, see Figure 19.1.

2.1.6 If the required damage stability calculations indicate that the side scuttles would become immersed at any intermediate stage of flooding or the final equilibrium waterline, they shall be of the non-opening type.

---

(1) *Deadlights are fitted to the inside of windows and side scuttles, while storm covers are fitted to the outside of windows, where accessible, and may be hinged or portable.*

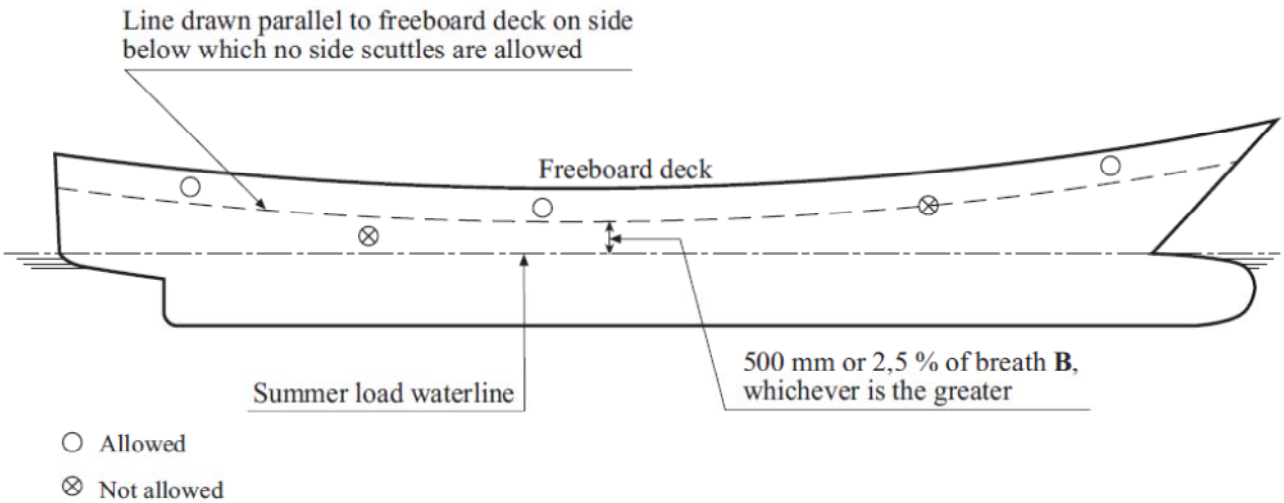

Figure 19.1 Arrangement of side scuttles

2.1.7 Windows shall not be fitted in the following locations:

– Below the freeboard deck

– In the first tier end bulkheads or sides of enclosed superstructures

– In first tier deckhouses that are considered buoyant in the stability calculations

2.1.8 Side scuttles and windows at the side shell in the second tier shall be provided with hinged inside deadlights capable of being closed and secured weathertight if the superstructure protects direct access to an opening leading below or is considered buoyant in the stability calculations.

2.1.9 Side scuttles and windows in side bulkheads set inboard from the side shell in the second tier which protect direct access below to spaces listed in 2.1.4 shall be provided with either hinged inside deadlights or, where they are accessible, permanently attached external storm covers which are capable of being closed and secured weathertight.

2.1.10 Cabin bulkheads and doors in the second tier and above separating side scuttles and windows from a direct access leading below or the second tier considered buoyant in the stability calculations may be accepted in place of deadlights or storm covers fitted to the side scuttles and windows.

2.1.11 Deckhouses situated on a raised quarter deck or on the deck of a superstructure of less than standard height may be regarded as being in the second tier as far as the requirements for deadlights are concerned, provided that the height of the raised quarter deck or superstructure is equal to or greater than the standard quarter deck height.

2.1.12 Fixed or opening skylights shall have a glass thickness appropriate to their size and position as required for side scuttles and windows. Skylight glasses in any position shall be protected from mechanical damage and, where fitted in position 1 or 2, shall be provided with permanently attached deadlights or storm covers.

2.2 Design Load

2.2.1 The design load shall be in accordance with Section 5.

2.2.2 For ships with a length **Lc** equal to or greater than 100 m, loads in accordance with ISO 5779 and 5780 standard have to be calculated additionally. The greater value has to be considered up to the third tier.

2.2.3 Deviations and special cases are subject to separate approval.

2.3 Frames

2.3.1 The design has to be in accordance with ISO standard 1751, 3903 and 21005 or any other recognised, equivalent national or international standard.

2.3.2 Variations from respective standards may require additional proof of sufficient strength by direct calculation or tests. This is to be observed for bridge windows in exposed areas (e.g. within forward quarter of ships length) in each case.

2.4 Glass panes

2.4.1 Glass panes have to be made of thermally toughened safety glass (TSG), or laminated safety glass made of TSG. The ISO standards 614 and 21005 are to be observed.

2.4.2 The glass thickness for windows and side scuttles has to be determined in accordance with the respective ISO standards 21005 or any other equivalent national or international standard, considering the design loads given in 2.2. For sizes deviating from the standards, the formulas given in ISO 3903 may be used.

2.4.3 Heated glass panes have to be in accordance with ISO 3434.

2.4.4 An equivalent thickness (t_s) of laminated toughened safety glass is to be determined from the following formula:

$$t_s = \sqrt{t_1^2 + t_2^2 + ...t_n^2}$$

t_1 = glass pane 1, t_2 = glass pane 2, … t_n = glass pane n

2.5 Tests

Windows and side scuttles have to be tested in accordance with the respective ISO standards 1751 and 3903. Where the size of the glass panes exceeds the ISO limit, i.e. 1100 × 800, the window is to be subjected to hydrostatic testing at 4 times the design pressure for the respective area.

E. Scuppers, Sanitary Discharges and Freeing Ports

1. Scuppers and sanitary discharges

1.1 Scuppers sufficient in number and size to provide effective drainage of water are to be fitted in the weather deck and in the freeboard deck within weathertight closed superstructures and deckhouses. Lower decks and decks within closed superstructures are to be drained to the bilge or special tanks. Scuppers from superstructures and deckhouses which are not closed weathertight are also to be led outside.

1.2 Scuppers draining spaces below the design waterline, are to be connected to pipes, which are led to the bilges or special tanks and are to be well protected.

1.3 Where scupper pipes are led outside from spaces below the freeboard deck and from weather tight closed superstructures and deckhouses, they are to be fitted with non-return valves of automatic type, which can be operated from a position always accessible and above the freeboard deck. Means showing whether the valves are open or closed (positive means of closing) are to be provided at the control position.

1.4 Where the vertical distance from the design waterline to the inboard end of the discharge pipe exceeds 0,01 **L**, the discharge may have two automatic non-return valves without positive means of closing provided that the inboard valve is always accessible for examination.

1.5 Where the vertical distance mentioned under 1.4 exceeds 0,02 **L**, a single automatic non-return valve without positive means of closing may be accepted. This relaxation is not valid for compartments below the freeboard deck of naval ships, for which a flooding calculation in the damaged condition is required.

1.6 Scuppers and discharge pipes originating at any level and penetrating the shell either more than 450 mm below the freeboard deck or less than 600 mm above the design waterline are to be provided with a non-return valve at the shell. This valve, unless required by 1.3, may be omitted if a heavy gauge discharge pipe is fitted.

1.7 Except in unmanned machinery and auxiliary machinery spaces, sea inlets and discharges in connection with the operation of the machinery may be controlled locally. The controls shall be readily accessible and shall be provided with indicators showing whether the valves are open or closed.

1.8 All valves including the ship side valves required under 1.2 to 1.7 are to be of steel, bronze or other approved ductile material. Ordinary cast iron is not acceptable. Pipe lines are to be of steel or similar material, see also Chapter 107 - Ship Operation Installations and Auxiliary Systems, Section 8.

It is recommended to use scuppers according to DIN 87223 (non turning-off type) and DIN 87223 (turning-off type).

1.9 Scuppers and sanitary discharges should not be fitted above the design waterline in way of life raft launching positions or means for preventing any discharge of water into picket boats are to be provided for. The location of scuppers and sanitary discharges is also to be taken into account when arranging gangways, pilot access, troop embarkation recesses, etc.

1.10 No scuppers shall lead to aircraft operating decks. The special requirements for the drainage of flight decks are defined in Chapter 107 - Ship Operation Installations and Auxiliary Systems, Section 9,I.3.

1.11 If scuppers are arranged within the ship's NBC citadel, special measures have to be taken (e.g. water traps), which guarantee that the slight overpressure in the citadel will be kept at all operating conditions.

1.12 For special measures for the discharge of seawater used for fire fighting and spraying of the ship's surface see Chapter 107 - Ship Operation Installations and Auxiliary Systems, Section 9.

2. Freeing ports

2.1 Where bulwarks on exposed portions of freeboard and/or superstructure decks form wells, ample provision is to be made for rapidly freeing the decks of water.

2.2 Except as provided in 2.3 to 2.5 the minimum freeing port area on each side of the ship for each well on the freeboard deck is to be determined by the following formulae in cases where the sheer in way of the well is standard or greater than standard:

$$A = 0{,}7 + 0{,}035\ell \quad \left[m^2\right] \text{ for } \ell \le 20\,m$$

$$A = 0{,}07\ell \quad \left[m^2\right] \text{ for } \ell > 20\,m$$

ℓ = length of bulwark [m]

ℓ_{max} = 0,7 **L**

The minimum area for each well on superstructure decks shall be one half of the area obtained by the formulae.

If the bulwark is more than 1,2 m in average height the required area is to be increased by 0,004 m^2 per metre of length of well and for each 0,1 m difference in height. If the bulwark is less than 0,9 m in average height, the required area may be decreased accordingly.

Freeing port areas which includes alternative solutions as direct seakeeping calculations (possibility of wet deck calculations etc.) should be accepted in accordance with Naval Authority and **TL**.

2.3 In ships with no sheer the area calculated according to 2.2 is to be increased by 50 %. Where the sheer is less than the standard the percentage shall be obtained by linear interpolation.

2.4 In ships having open superstructures, adequate freeing ports are to be provided which guarantee proper drainage.

2.5 The lower edges of the freeing ports shall be as near to the deck as practicable. Two thirds of the freeing port area required shall be provided in the half of the well nearest to the lowest point of the sheer curve.

2.6 All such openings in the bulwarks shall be protected by rails or bars spaced approximately 230 millimetres apart. If shutters are fitted to freeing ports, ample clearance shall be provided to prevent jamming. Hinges shall have pins or bearings of non-corrodible material.

F. Air Pipes, Overflow Pipes, Sounding Pipes

1. Each tank is to be fitted with air pipes, overflow pipes and sounding pipes. The air pipes are in general to be led to above the exposed deck. For the arrangement and scantlings of pipes see Chapter 107 - Ship Operation Installations and Auxiliary Systems, Section 8, R. The height from the deck of the point where the water may have access is to be at least 760 mm on the freeboard deck and 450 mm on a superstructure deck.

2. Suitable closing appliances are to be provided for air pipes, overflow pipes and sounding pipes, see also Chapter 107 - Ship Operation Installations and Auxiliary Systems, Section 8, R. Where materials, containers, vehicles, etc. are carried on deck, the closing appliances are to be readily accessible at all times. In naval ships for which flooding calculations are to be made, the ends of the air pipes are to be above the damage waterline in the flooded condition. Where they immerge at intermediate stages of flooding, these conditions are to be examined separately.

3. Closely under the inner bottom or the tank top, holes are to be cut into floor plates and side girders as

well as into beams, girders, etc., to give the air free access to the air pipes.

Besides, all floor plates and side girders are to be provided with limbers to permit the water or oil to reach the pump suctions.

4. Sounding pipes are to be extended to directly above the tank bottom. The shell plating is to be strengthened by thicker plates or doubling plates under the sounding pipes.

G. Ventilators

1. General

1.1 The height of the ventilator coamings with weathertight covers on the exposed freeboard deck and on exposed superstructure decks in the range 0,25 **L** from **FP** is to be at least 900 mm.

1.2 On exposed superstructure decks abaft 0,25 **L** from FP the coaming height is not to be less than 760 mm.

1.3 Ventilators of holds are not to have any connection with other spaces.

1.4 The thickness of the coaming plates is to be 1,0 mm bigger than the thickness of the surrounding deck.

1.5 The thickness of ventilator posts should be at least equal to the thickness of coaming as per 1.4.

1.6 The wall thickness of ventilator posts of a clear sectional area exceeding 1 600 cm^2 is to be increased according to the expected loads.

1.7 Generally, the coamings and posts shall pass through the deck and shall be welded to the deck plating from above and below.

Where coamings or posts are welded onto the deck plating, fillet welds of $a = 0,5 \cdot t_0$, subject to Section 15, B.3.3 should be adopted for welding inside and outside.

1.8 Coamings and posts particularly exposed to wash of sea are to be efficiently connected with the ship's structure.

1.9 Coamings of a height exceeding 900 mm are to be specially strengthened.

1.9 Where beams are pierced by ventilator coamings, carlings of adequate scantlings are to be fitted between the beams in order to maintain the strength of the deck.

2. Closing appliances

2.1 Inlet and exhaust openings of ventilation systems are to be provided with easily accessible closing appliances, which can be closed weathertight against wash of the sea.

2.2 If the height of the ventilator coaming exceeds 4,5 m above the freeboard deck or above exposed superstructure decks forward of 0,25 **L** from **FP** and exceeds 2,3 m above exposed superstructure decks abaft 0,25 **L** from **FP** closing appliances are required in special cases only.

2.3 For the case of fire draught-tight fire dampers are to be fitted.

H. Stowage of Containers

1. General

1.1 All parts for container stowing and lashing equipment are to comply with the **TL** Rules Chapter 51 - Stowage and Lashing of Containers. All parts which are intended to be welded to the ship's hull, including hatch covers, are to be made of materials complying with and tested in accordance with the TL Rules Chapter 2 Materials and Chapter 3 Welding.

1.2 All equipment on deck and in holds essential for maintaining the safety of the ship and which are to be accessible at sea, e.g. firefighting equipment, sounding pipes etc., should not be made inaccessible by containers or their stowing and lashing equipment.

1.3 For transmitting the forces from the container stowing and lashing equipment into the ship's hull adequate welding connections and local reinforcements of structural members are to be provided, see also 2. and 3.

1.4 Where inner bottom, decks, etc. are loaded with containers, adequate substructures, e.g. carlings, half height girders etc., are to be provided and the plate thickness is to be increased where required. For welded-in parts, see Section 15, B.2.

2 Load assumptions

2.1 The scantlings of the local ship structures and container substructures are to be determined on the basis of the Container Stowage and Lashing Plan.

2.2 For determining scantlings the following design forces are to be used which are assumed to act simultaneously in the centre of gravity of a stack:

ship's transverse (y-)direction:

$0{,}5 \cdot g \cdot G$ [kN]

ship's vertical (z-)direction:

$(1 + a_z)\, g \cdot G$ [kN]

G = stack mass [t]

a_z = vertical acceleration component, see Section 5, B.1.

3. Permissible stresses

3.1 The stresses in local ship structures and in substructures for containers and lashing devices are not to exceed the following values:

$$\sigma_b = \frac{R_{eH}}{1{,}5}$$

$$\tau = \frac{R_{eH}}{2{,}3}$$

$$\sigma_v = \sqrt{\sigma_b^2 + 3\tau^2} = \frac{R_{eH}}{1{,}3}$$

R_{eH} = minimum yield stress of the material, see Section 3.

3.2 Where other structural members of the hull, e.g. frames, deck beams, bulkheads, hatchway coamings, bulwark stays, etc. are subjected to loads from containers and container lashing devices, these members are to be strengthened wherever necessary so that the actual stresses will not exceed those upon which the formulae in the respective Sections are based.

I. Lashing Arrangements

Lashing eyes and holes are to be arranged in such a way as to not unduly weaken the structural members of the hull. In particular where lashings are attached to frames, they are to be so arranged that the bending moment in the frames is not unduly increased. Where necessary, the frame is to be strengthened.

J. Life Saving Appliances

1. It is assumed that for the arrangement and operation of lifeboats and other life-saving appliances the regulations defined by the Naval Authority are complied with. It is recommended to follow the guidelines defined in the "International Convention for Safety of Life at Sea **(SOLAS)** 1974".

2. The design and testing of life saving appliances are not part of Classification. However, approval of the hull structure in way of the launching appliances taking into account the forces from the above appliances is part of Classification.

Note:
*In all cases where **TL** has been requested to approve the launching appliances, the **TL** Rules Guidelines for Live Saving Launching Appliances apply.*

K. Signal, Radar and Sensor Masts

1. General

1.1 Drawings of masts, mast substructures and hull connections are to be submitted for approval.

1.2 For radar and sensor masts shock calculations are recommended to be submitted for verification.

1.3 Loose and accessory parts are to comply with the **TL** Rules Guidelines for the Construction and Survey of Lifting Appliances. All parts are to be individually tested which shall be supervised and certified by **TL**.

1.4 Other masts than covered by 2. and 3. as well as special construction forms, must as regards dimensions and design in each case be individually agreed with **TL**.

2. Signal masts

The following requirements apply to single tubular or equivalent rectangular sections made of steel with an ultimate tensile strength R_m = 400 N/mm^2, which are typically designed to carry only signals (navigation lanterns, flag and day signals).

2.1 Stayed masts

2.1.1 Stayed masts may be constructed as simply supported masts (rocker masts) or may be supported by one or more decks (constrained masts).

2.1.2 The diameter of stayed steel masts at the uppermost support is to be at least 20 mm for each 1 m length of mast (ℓ_W) from the uppermost support to the fixing point of shrouds. The length of the mast top above the fixing point of shrouds is not to exceed 1/3 ℓ_W.

2.1.3 Masts according to 2.1.2 may be gradually tapered towards the fixing point of shrouds to 75 per cent of the diameter at the uppermost support. The plate thickness is not to be less than 1/70 of the diameter or at least 4 mm.

2.1.4 Wire ropes for shrouds are to be thickly galvanized. It is recommended to use wire ropes composed of a minimum number of thick wires, as for instance a rope construction 6x7 with a tensile breaking strength of 1 570 N/mm^2 on which Table 19.1 is based. Other rope constructions shall be of equivalent stiffness.

2.1.5 Where masts are stayed forward and backwards by two shrouds on each side of the ship, steel wire ropes are to be used according to Table 19.1.

2.1.6 Where steel wire ropes according to Table 19.1 are used, the following conditions apply:

$b \geq 0{,}3 \cdot h$

$0{,}15 \cdot h \leq a \leq b$

Table 19.1 Definition of ropes for stays

h[m]	6	8	10	12	14	18
Rope diameter [mm]	14	16	18	20	22	24
Nominal size of shackle, rigging screw, rope socket	1,6	2.0	2,5	3,0	4,0	4,0
h = height of shroud fixing point above shroud foot point						

a = the longitudinal distance from a shroud's foot point to its fixing point

b = the transverse distance from a shroud's foot point to its fixing point

Alternative arrangements of stayings are to be of equivalent stiffness.

2.2 Unstayed masts

2.2.1 Unstayed masts may be completely constrained in the uppermost deck or be supported by two or more decks. In general, the fastenings of masts to the hull of a ship should extend over at least one deck height.

2.2.2 The scantlings for unstayed steel masts are given in the Table 19.2

2.2.3 The diameter of masts may be gradually tapered to D/2 at the height of 0,75 ℓ_m.

3. Radar and sensor masts

These masts are typically of 3-leg, box girder or frame work design.

Table 19.2 Scantlings of unstayed steel masts

Length of mast ℓ_m [m]	6	8	10	12	14
D x t [mm]	160x4	220x4	290 x 4,5	360x5,5	430 x 6,5

ℓ_m = *length of mast from uppermost support to the top*
D = *diameter of mast at uppermost support*
t = *plate thickness of mast*

3.1 For dimensioning, the dead loads, acceleration forces, see Section 5, B., and wind loads, see Section 5, E. are to be considered.

3.2 Where necessary, additional loads e. g. loads caused by the sea, fastening of crane booms or tension wires are also to be considered.

3.3 The design loads for 3.1 and 3.2 as well as the allowable stresses can be taken from the TL Rules Guidelines for the Construction and Survey of Lifting Appliances.

3.4 In case of 3-leg masts the individual leg forces shall be calculated with the aforementioned forces acting in the direction of a considered leg and rectangular to one of the two other legs.

3.5 Single tubular or rectangular masts mounted on the top of box girder or frame work masts may be dimensioned according to 2.

3.6 In case of thin walled box girder masts stiffening and/or additional buckling stiffeners may be necessary.

4. Structural details

4.1 The substructures are to be dimensioned for the transmission of the acting forces.

4.2 Doubling plates at mast feet are permissible only for the transmission of compressive forces since they are generally not suitable for the transmission of tensile forces or bending moments.

4.3 In case of tubular constructions all welded fastenings and connections must be of full penetration weld type.

4.4 If necessary, slim tubular structures are to be additionally stayed or supported in order to avoid vibrations.

4.5 The dimensioning normally does not require a calculation of vibrations. However, in case of undue vibrations occurring during the ship's trials a respective calculation will be required.

4.6 For determining scantlings of masts made from aluminium or austenitic steel, the requirements given in Section 3, B.4., and D. apply.

4.7 At masts solid steel ladders have to be fixed at least up to 1,50 m below top, if they have to be climbed for operational or maintenance purposes. Above them, suitable handgrips are necessary.

4.8 If possible from the construction point of view, ladders should be at least 0,30 m wide. The distance between the rungs shall be 0,30 m. The horizontal distance of the rung centre from fixed parts shall not be less than 0,15 m. The rungs shall be aligned and be made of square steel bars 20/20 edge up.

4.9 Platforms on masts which have to be used for operational reasons, shall have a rail of at least 0,90 m in height with one intermediate bar. Safe access from the mast ladders to the platform is to be provided.

4.10 If necessary, on masts a safety installation consisting of foot, back, and hand rings enabling safe work in places of servicing and maintenance is to be provided.

L. Loading and Lifting Gear

1. The dimensioning and testing of lifting appliances, including derrick masts, derrick posts and their standing rigging on board ships, does not constitute part of the Classification of the ship. The Classification does, however, include checking the structure of the ship's hull in way of lifting appliances

and forces transmitted thereby.

2. The dimensioning and testing of lifting appliances shall be as stipulated by the requirements defined in Chapter 107 - Ship Operation Installations and Auxiliary Systems, Section 3 and in more detail by the **TL** Rules Guidelines for the Construction and Survey of Lifting Appliances.

3. The requirements of the Naval Authority and other requirements may be additionally complied with if this is agreed. If several regulations are to be applied their order of precedence is to be agreed upon.

4. Pad eyes for the reception or transmission of forces may be tested and hard stamped like lifting accessories if this is agreed upon.

5. On naval ships **TL** normally only supervises and certifies the initial function and load testing which are to be conducted before lifting appliances are taken into use. If this is agreed upon **TL** would also conduct and certify regular repeated surveys and/or load tests.

6. The equipment for replenishment at sea is defined in Chapter 107 - Ship Operation Installations and Auxiliary Systems, Section 4.

M. Guard Rails

1. Efficient guard rails or bulwarks are to be fitted on all exposed parts of the freeboard and superstructure decks. The height is to be at least 1,0 m from the deck.

2. The height below the lowest course of the guard rails is not to exceed 230 mm. The other courses are not to be spaced more than 380 mm apart.

3. In the case of ships with rounded gunwales the guard rail supports are to be placed on the flat part of the deck.

4. Guard rails are to be constructed in accordance with DIN 81702 or equivalent standards. Equivalent constructions of sufficient strength can be accepted.

5. Guard rail stanchions are not to be welded to the shell plating

SECTION 20

STRUCTURAL FIRE PROTECTION

A. General

1. Application

1.1 The requirements of this Section are divided into two parts. Basic requirements according to B. and some parts of C., which are determined case by case between the Naval Authority and the shipyard and agreed by **TL**, apply to all classified naval ships. In case the class notation **SFP** is granted, all additional requirements according to C. are to be complied with.

1.2 Where this Section requires that a particular fitting, material, appliance or apparatus, or type thereof, shall be fitted or carried in a ship, or that any particular provision shall be made, **TL** may allow any other fitting, material, appliance or apparatus, or type thereof, to be fitted or carried, or any other provision to be made in the ship, if it is satisfied by trial thereof or otherwise that such fitting, material, appliance or apparatus or type thereof, or provision, is at least as effective as that required by this Section.

Where compliance with any of the requirements of this Section would be impracticable for the particular design of the ship, **TL** may substitute those with alternative requirements, provided that equivalent safety is achieved.

1.3 The fire fighting systems and equipment for fire fighting is defined in Chapter 107 - Ship Operation Installations and Auxiliary Systems, Section 8 and 9.

1.4 The electrical installations for fire detection are defined in Chapter 105 - Electrical Installations.

2. Definitions

2.1 General definitions

2.1.1 Fire-restricting materials

Fire-restricting materials are those materials which have fire-retarding properties in accordance with a standard acceptable to **TL**.

2.1.2 Non-combustible material

Non-combustible material is a material which neither burns nor gives off flammable vapours in sufficient quantity for self-ignition when heated to approximately 750 °C, this being determined by a standard acceptable to **TL**. Any other material is a combustible material.

2.1.3 Low flame spread

Low flame spread means that the surface thus described will adequately restrict the spread of flame, this being determined in accordance with a standard acceptable to **TL**.

2.1.4 Equivalent material

Where the term "steel or other equivalent material" occurs, equivalent material means any non-combustible material which, by itself or due to insulation provided, has structural and integrity properties equivalent to steel at the end of the applicable exposure to the standard fire test (e. g. aluminium alloy with appropriate insulation).

2.1.5 Smoke-tight

Smoke-tight means that a division made of non-combustible or fire-restricting materials is capable of preventing the passage of smoke.

2.1.6 Fire-resisting divisions

Fire-resisting divisions are those divisions formed by bulkheads and decks which comply with the following:

2.1.6 They shall be constructed of non-combustible or fire-restricting materials which by insulation or inherent fire-resisting properties satisfy the following requirements.

2.1.6.1 They shall be suitably stiffened.

2.1.6.2 They shall be so constructed as to be capable
of preventing the passage of smoke and flame up to the end of the appropriate fire protection time.

2.1.6.3 Where required they shall maintain load-carrying capabilities up to the end of the appropriate fire protection time.

2.1.6.4 They shall have thermal properties such that the average temperature on the unexposed side will not rise more than 140 °C above the original temperature, nor will the temperature, at any one point, including any joint, rise more than 180 °C above the original temperature during the appropriate fire protection time.

2.1.6.5 A prototype bulkhead or deck shall be required to ensure that the above requirements are met in accordance with approval by **TL**.

2.1.7 Main vertical zones

Main vertical zones are those sections into which the hull, superstructure and deckhouses are divided by fire-resisting divisions, the mean length and width of which on any deck does not in general exceed 40 m.

2.1.8 Place of refuge

"Place of refuge" is any naturally or artificially sheltered area which may be used as a shelter by a ship or the persons on board under conditions likely to endanger the ship's safety.

2.2 Spaces other than machinery spaces

2.2.1 Accommodation spaces

Accommodation spaces are those spaces used for mess rooms, recreation rooms, corridors, cabins, sickbays, offices, lavatories and similar spaces.

2.2.2 Service spaces

Service spaces are those spaces used for pantries containing food warming equipment but no cooking facilities with exposed heating surfaces, lockers, store rooms, work shops other than those forming part of the machinery spaces, and similar spaces and trunks to such spaces.

2.2.3 Galleys

Galleys are those enclosed spaces containing cooking facilities with exposed heating surfaces, or which have any cooking or heating appliances each having a power of more than 5 kW.

2.2.4 Cargo spaces

Cargo spaces are all spaces other than special category spaces and ro-ro spaces used for cargo and trunks to such spaces.

2.2.5 Special category spaces

Special category spaces are those enclosed ro-ro spaces, enclosed helicopter and fixed wing aircraft hangars where also maintenance work is performed, enclosed bays for landing craft, midget-submarines, etc. to which embarked troops have access. Special category spaces may be accommodated on more than one deck provided that the total overall clear height for vehicles, aircraft, etc. does not exceed 10 m.

2.2.6 Ro-ro spaces

Ro-ro spaces are spaces not normally subdivided in any way and normally extending to either a substantial length or the entire length of the ship in which motor vehicles, tanks, assault craft and other military vehicles with fuel in their tanks for their own propulsion and/or military goods, trailers, containers, pallets, demountable tanks or in or on similar stowage units or other respectables can be loaded and unloaded, normally in horizontal direction.

2.2.7 Open ro-ro spaces

Open ro-ro spaces are those ro-ro spaces, which:

- Are open at both ends, or
- Are open at one end and are provided with

permanent openings distributed in the side plating or deck head or from above, having a total area of at least 10 % of the total area of the space sides.

2.2.8 Control stations

Control stations are bridge, radio room, combat information centre (CIC), machinery control centre (MCC), damage control centre (DCC) and flight control centre (FCC) as well as gyro compass and analogous spaces, spaces where the emergency source of power and emergency switchboard or comparable systems are located or where the fire recording or fire control equipment is centralized or where other functions essential to the safe operation of the ship such as propulsion control, public address, stabilisation systems, etc. are located.

2.2.9 Continuously manned control station

A continuously manned control station is a control station which is continuously manned by a responsible member of the crew while the ship is in normal service.

2.2.10 Assembly station

Assembly station is an area or space where crew and embarked troops can be gathered in the event of an emergency, given instructions and prepared to abandon the ship, if necessary.

2.3 Machinery spaces

2.3.1 Machinery spaces (main spaces)

Machinery spaces are spaces containing internal combustion engines with an aggregate total power output of more than 110 kW, generators, oil fuel units, propulsion machinery, major electrical machinery and similar spaces and trunks to such spaces.

2.3.2 Auxiliary machinery space

Auxiliary machinery spaces are spaces containing internal combustion engines of power output up to and including 110kW, driving generators, sprinkler, drencher or fire pumps, bilge pumps etc., oil filling stations, switchboards of aggregate capacity exceeding 800 kW, similar spaces and trunks to such spaces.

2.3.3 Auxiliary machinery spaces having little or no fire risk

Auxiliary machinery spaces having little or no fire risk are spaces containing refrigerating, stabilizing, ventilation and air conditioning machinery, switch boards of aggregate capacity 800 kW or less, similar spaces and trunks to such spaces.

B. Basic Requirements for all Ships

The requirements of B. apply to all ships.

1. Documents to be submitted

In addition to the documentation defined in Section 1, Table 1.3 the following documentation is to be submitted:

- Escape way plan
- Fire control plan
- List of approved fire control equipment
- List of type-approved materials with respect to linings and ceilings, insulation, deck coverings, interior surfaces (type, maker, approval number)

The documentation is to be submitted in triplicate. **TL** reserve the right to ask for additional information and/or supplementary copies, if deemed necessary in particular cases.

2. Main structure

The hull, superstructures, structural bulkheads, decks, deckhouses and pillars shall be constructed of approved non-combustible materials having adequate structural properties. The use of other fire-restricting materials may be permitted provided the requirements of this Section are complied with and the materials are approved by **TL**.

3. Restricted use of combustible materials

3.1 Insulation, lining, ceiling, deck covering and draught stop materials

3.1.1. All separating divisions, ceilings or linings shall be of non-combustible or fire-restricting materials. Draught stops shall be of non-combustible or fire-resisting material.

3.1.2 Where insulation is installed in areas in which it could come into contact with any flammable liquids or vapours, its surface shall be impermeable to such flammable liquids or vapours.

3.1.3 Any thermal and acoustic insulation shall be of non-combustible or of fire-resisting material. Vapour barriers and adhesives used in conjunction with insulation, as well as insulation of pipes for cold service systems need not be non-combustible or fire-restricting, but they shall be kept to the minimum quantity practicable and their exposed surfaces shall have approved low flame spread characteristics.

3.1.4. All deck finishing materials shall be of an approved standard.

3.1.5 Void spaces, where low-density combustible materials are used to provide buoyancy, shall be protected from adjacent fire hazard areas by fire-resisting divisions, in accordance with Table 20.1. The space shall be gastight towards adjacent spaces and shall be ventilated to atmosphere.

3.2 Surface materials

3.2.1 The following surfaces shall, as a minimum standard, be constructed of materials having approved low flame-spread characteristics:

- Exposed surfaces in corridors and stairway enclosures, and of bulkheads (including windows), wall and ceiling linings in all accommodation and service spaces and control stations

- Surfaces in concealed or inaccessible spaces in corridors and stairway enclosures, accommodation and service spaces and control stations

3.2.2 Exposed surfaces in corridors and stairway enclosures, and of bulkheads (including windows), wall and ceiling linings, in accommodation, service spaces and control stations shall be constructed of materials which, when exposed to fire, are not capable of producing excessive quantities of smoke or toxic products, this being determined with an approved fire test procedure.

4. Means of escape

4.1 General requirements

4.1.1 Unless expressly provided otherwise, at least two widely separated and ready means of escape shall be provided from all spaces or group of spaces.

4.1.2 Lifts shall not be considered as forming one of the means of escape.

4.2 Means of escape from accommodation and service spaces and control stations

4.2.1 General

4.2.2 Stairways, ladders and corridors

Stairways and ladders shall be so arranged as to provide ready means of escape to the life-saving appliances embarkation decks from all spaces in which personnel is normally employed or accommodated, other than machinery spaces.

No dead-end corridors having a length of more than 7 m shall be accepted.

Stairways and corridors used as means of escape shall be not less than 700 mm in clear width and shall have at least a handrail on one side. Stairways and corridors with a clear width of 1 800 mm and over shall have handrails on both sides. "Clear width" is considered the distance between the handrail and the bulkhead on the other side or between the handrails. Doorways which give access to a stairway shall be of the same size as the stairway.

4.2.3 Doors in escape routes

Doors in escape routes shall, in general, open in way of the direction of escape, except that:

- Individual cabin doors may open into the cabins in order to avoid injury to persons in the corridors when the door is opened.

- Doors in vertical emergency escape trunks may open out of the trunk in order to permit the trunk to be used both, for escape and for access.

4.2.4 Escape from spaces below the bulkhead deck or the lowest open deck

Below the bulkhead deck or the lowest open deck the main means of escape shall be a stairway and the second escape may be a watertight door, a trunk or a stairway.

4.2.5 Escape from spaces above the bulkhead deck or the lowest open deck

Above the bulkhead deck or the lowest open deck the means of escape shall be stairways or doors to an open deck or a combination thereof.

4.2.6 Exceptionally, **TL** may dispense with one of the means of escape for spaces that are entered only occasionally, if the required escape route is independent of watertight doors.

4.3 Means of escape from machinery spaces

Means of escape from each machinery space shall comply with the following provisions.

4.3.1 Except as provided in 4.3.2, two means of escape shall be provided from each main machinery space other than auxiliary machinery spaces. In particular, one of the following provisions shall be complied with:

4.3.1.1 Two sets of steel ladders, as widely separated
as possible, leading to doors in the upper part of the space, similarly separated and from which access is provided to the open deck. One of these ladders shall provide continuous fire shelter from the lower part of the space to a safe position outside the space. This fire shelter shall be of steel and shall be insulated to the satisfaction of TL and provided with self-closing doors if necessary; or

4.3.1.2 One steel ladder leading to a door in the upper part of the space from which access is provided to the open deck and, additionally, in the lower part of the space and in a position well separated from the ladder referred to, a steel door capable of being operated from each side and which provides access to a safe escape route from the lower part of the space to the open deck.

4.3.2 For smaller ships **TL** may dispense with one of the means of escape required in 4.3.1, due regard being paid to the dimension and disposition of the upper part of the space. In addition, the means of escape from the machinery spaces need not comply with the requirement for a continuous fire shelter as per 4.3.1.1. In steering gear spaces, a second means of escape shall be provided when the emergency steering position is located in that space unless there is direct access to the open deck.

4.3.3 From all kinds of auxiliary machinery spaces, two escape routes shall be provided except that a single escape route may be accepted for spaces that are entered only occasionally, and for spaces where the maximum walking distance to the door is 5 m or less.

4.3.4 One of the escape routes from the machinery spaces where the crew is normally employed shall avoid direct access to any special category space.

4.4 Means of escape from special category and open ro-ro spaces to which embarked personnel can have access

In special category and open ro-ro spaces to which embarked personnel can have access, the number and locations of the means of escape both below and above the bulkhead deck shall be to the satisfaction of TL and, in general, the safety of access to the open deck shall be at least equivalent to that provided for under 4.2.4 and 4.2.5. Such spaces shall be provided with designated walkways to the means of escape with a

width of at least 600 mm. The parking arrangements for the vehicles shall maintain the walkways at all times.

4.5 Means of escape from ro-ro spaces

At least two means of escape shall be provided in ro-ro spaces where the crew and/or embarked troops are normally employed. The escape routes shall provide a safe escape to the open deck and shall be located at the fore and aft end of the space.

5. Fire detection system

The spaces to be provided with a fixed fire detection and fire alarm system are defined in Chapter 107 - Ship Operation Installations and Auxiliary Systems, Section 9, C.

C. Additional Requirements for Ships with Class Notation SFP

1. General

The requirements of C. are additional to those of B. They are based on relevant experience and international regulations, but their use is optional in accordance with the intentions of the Naval Authority and if fully met, the Class Notation **SFP** (structural fire protection) will be granted. The requirements of C. take precedence over B. For ships without SFP refer to A.1.1.

2. Application

The requirements of C. apply on the following conditions unless hull, superstructures, structural bulkheads, decks and deckhouses are constructed of steel or equivalent material and all divisions, ceilings, linings and insulations are made from approved non-combustible materials:

- Ships are capable of maintaining the main functions and safety systems of unaffected spaces after fire in any one compartment on board. Ships need not be able to return to a place of refuge under its own power.

- All personnel on board can abandon the ship within a period less than the structural fire protection time for major hazard areas as per 4.2.3.

- Ships do not proceed during their mission more than 8 hours at operational speed from a base at land or sea or any other place of refuge.

3. Documents to be submitted

The documentation to be submitted for approval in addition to the documentation defined in B.1. is defined as follows:

- Fire division plan
- Insulation plan
- Arrangement of draught stops
- Fundamental design of constructing draught stops
- Deck covering plan
- Joiner plan
- Fire barrier penetrations of ducts, pipes and cables, including information on type, maker and approval number
- Fire door plan
- Ventilation and air condition functional scheme
- List of type-approved structural components and materials with respect to fire divisions, fire doors, fire dampers, combustible duct materials, furniture materials, suspended textile materials, bedding component materials (type, maker, approval numbers)
- Space allocation of fire detectors and sprinkler heads
- Fire protection scheme for flight decks

The documentation is to be submitted in triplicate. TL reserve the right to ask for additional information and/or supplementary copies, if deemed necessary in particular cases.

4. Fire-resisting divisions

Ships of all types shall be sub dived into thermal and structural divisions having regard to the fire risk of the space.

4.1 Main vertical and horizontal zones

4.1.1 Vertical zones

4.1.1.1 The hull, superstructure and deckhouses shall be subdivided into main vertical zones by fire-resisting divisions of 60 minutes structural fire protection time on either side. Where a category C space defined in 4.2.2.3 or where fuel oil tanks are adjacent to the division no fire insulation need to be provided on that side.

4.1.1.2 As far as practicable, the bulkheads forming the boundaries of the main vertical zones above the bulkhead deck shall be in line with watertight subdivision bulkheads situated immediately below the bulkhead deck. The length and the width of main vertical zones may be extended to a maximum of 48 m in order to bring the ends of main vertical zones to coincide with watertight subdivision bulkheads or in order to arrange a large accommodation space extending for the whole length of the main vertical zone provided that the total area of the main vertical zone is not greater than 1600 m^2 on any deck. The length or width of a main vertical zone is the maximum distance between the furthermost points of the bulkheads bounding it.

4.1.1.3 The bulkheads forming boundaries of main vertical zones shall extend from deck to deck and to the shell or other boundaries.

4.1.2 Horizontal zones

4.1.2.1 In ships designed for special purposes, such as amphibious warfare vessels or aircraft carriers, where the provision of main vertical zone bulkheads would defeat the purpose for which the ship is intended, equivalent means for controlling and limiting a fire shall be substituted and specially approved by **TL**.

4.1.2.2 The basic principle is that the main vertical zoning may not be practicable in vehicle spaces and, therefore, equivalent protection must be obtained in such spaces on the basis of a horizontal zone concept and by the provision of an efficient fixed fire-extinguishing system. Based on this concept, a horizontal zone for the purpose of this regulation may include special category spaces on more than one deck provided that the total overall clear height for vehicles does not exceed 10 m.

4.1.2.3 The basic principle underlying the provisions of 4.1.2.2 is also applicable to ro-ro spaces.

4.1.2.4 The requirements for ventilation systems, openings and penetrations in fire-resisting divisions for maintaining the integrity of vertical zones in this Section shall be applied equally to decks and bulkheads forming the boundaries separating horizontal zones from each other and the remainder of the ship.

4.1.2.5 Notwithstanding the provisions of 4.1.1, the boundary bulkheads and decks of special category spaces and ro-ro spaces shall have 60 min structural fire protection time on either side. However, where a category C space is adjacent to the division or where fuel oil tanks are below a special category space or a ro-ro space, no fire insulation need to be provided on that side.

4.2 Fire integrity of decks and bulkheads

4.2.1 In addition to complying with the specific provisions for the fire integrity of bulkheads and decks, the minimum fire integrity of all bulkheads and decks shall be in accordance with Table 20.1. The classification of the space use is defined in 4.2.2.

4.2.2 Classification of space use

For the purposes of classification of space use in accordance with fire hazard risks, the following grouping shall apply:

4.2.2.1 Areas of major fire hazard

"Areas of major fire hazard" referred to in Table 20.1 by A, include the following spaces:

- Machinery spaces

- Rocket silos or similar
- Ro-ro spaces
- Spaces containing dangerous goods
- Special category spaces
- Store-rooms containing flammable liquids
- Galleys
- Aircraft hangars, refuelling and maintenance facilities
- Trunks as part of above spaces

4.2.2.2 Areas of moderate fire hazard

"Areas of moderate fire hazard" referred to in Table 20.1 by B, include the following spaces:

- Auxiliary machinery spaces
- Accommodation containing sleeping berths
- Service spaces
- Trunks as part of above spaces

4.2.2.3 Areas of minor fire hazard

"Areas of minor fire hazard" referred to in Table 20.1 by C, include the following spaces:

- Auxiliary machinery spaces having little or no fire risk
- Cargo spaces
- Ammunition storage rooms, rooms for handling and storage of torpedoes, mines, aircraft missiles, etc.
- Tanks, voids and areas of little or no fire risk
- Fuel tank compartments
- Corridors in accommodation areas and stairway enclosures
- Accommodation other than defined in 4.2.2.2
- Trunks as part of the above spaces

4.2.2.4 Control stations

"Control stations" referred to in Table 20.1 by D, are the spaces as defined in A.2.2.8.

4.2.2.5 Evacuation stations and external escape routes

Evacuation stations and external escape routes referred to in Table 20.1 by E, include the following areas:

- External stairs and open decks used for escape routes
- Assembly stations, internal and external
- Open deck spaces forming boat and liferaft embarkation and lowering stations
- The ship's side to the waterline in the lightest seagoing condition, superstructure and deck-house sides situated below and adjacent to the liferaft's and evacuation system's embarkation areas

4.2.2.6 Open spaces

"Open spaces" referred to in Table 20.1 by F, include open spaces locations other than evacuation stations and external escape routes and control stations.

4.2.3 Fire-resisting divisions

4.2.3.1 The requirements below apply to all ships irrespective of construction material. The structural fire protection times for separating bulkheads and decks not bounding either main vertical zones or horizontal zones shall be in accordance with Table 20.1 and the structural fire protection times are all based on providing protection for a period of 60 min. If any other lesser fire protection time is determined depending on the time

needed for the evacuation of the ship, then the times given below in 4.2.3.5 and 4.2.3.6 may be amended pro rata. In no case shall the structural fire protection time be less than 30 min.

4.2.3.2 In using Table 20.1 it shall be noted that the title of each category is intended to be typical rather than restrictive. For determining the appropriate fire integrity standards to be applied to boundaries between adjacent spaces, where there is doubt as to their classification for the purpose of this Section, they shall be treated as spaces within the relevant category having the most stringent boundary requirement.

4.2.3.3 Areas of major and moderate fire hazard shall be enclosed by fire-resisting divisions complying with the requirements of A.2.1.6 except where the omission of any such division would not affect the safety of the ship. These requirements need not apply to those parts of the structure in contact with water at the lightweight condition, but due regard shall be given to the effect of temperature of hull in contact with water and heat transfer from any uninsulated structure in contact with water to insulated structure above the water.

4.2.3.4 In approving structural fire protection details, TL will have regard to the risk of heat transmission at intersections and terminal points of required thermal barriers.

4.2.3.5 Fire-resisting bulkheads and decks shall be constructed to resist exposure to the standard fire test for a period of 30 min for areas of moderate fire hazard and 60 minutes for areas of major fire hazard except as provided in 4.2.3.1.

4.2.3.6 Main load-carrying structures within areas of major fire hazard and areas of moderate fire hazard and structures supporting control stations shall be arranged to distribute load such that there will be no collapse of the construction of the hull and superstructure when it is exposed to fire for the appropriate fire protection time. The load-carrying structure shall also comply with the requirements of 4.2.3.7 and 4.2.3.8.

4.2.3.7 If the structures specified in 4.2.3.6 are made of aluminium alloy, their insulation shall be such that the temperature of the core does not rise more than 200 °C above the ambient temperature in accordance with the times in 4.2.3.1 and 4.2.3.5.

4.2.3.8 If the structures specified in 4.2.3.6 are made of combustible material, their insulation shall be such that their temperatures will not rise to a level where deterioration of the construction will occur during the exposure to the standard fire test to such extent that the load-carrying capability, in accordance with the times in 4.2.3.1 and 4.2.3.5 will be impaired.

4.2.3.9 The construction of all doors and door frames in fire-resisting divisions, with the means of securing them when closed, shall provide resistance to fire as well as to the passage of smoke and flame equivalent to that of the bulkheads in which they are situated. Watertight doors of steel need not be insulated. The use of combustible materials in doors separating cabins from individual interior sanitary accommodation, such as showers, may be permitted. Also, where a fire-resisting division is penetrated by pipes, ducts, electrical cables etc. arrangements shall be made to ensure that the fire-resisting integrity of the division is not impaired, and necessary testing shall be carried out in accordance with the standard fire test.

5. Restricted use of combustible materials

Furniture and furnishings in accommodation, service spaces, etc. shall comply with the following standards unless hull, superstructures, structural bulkheads, decks and deckhouses are constructed of steel or equivalent material and all divisions, ceilings, linings and insulation are made from approved non-combustible materials:

- All case furniture is constructed entirely of approved non-combustible or fire-restricting materials, except that a combustible veneer with a calorific value not exceeding 45 MJ/m^2 may be used on the exposed surface of such articles.

- All other furniture such as chairs, tables, etc. is constructed with frames of approved non-combustible or fire-restricting materials.

- All draperies, curtains, other suspended textile materials have qualities of resistance

to the propagation of flame in accordance with TL approved procedures.

- All upholstered furniture and bedding components have qualities of resistance to the ignition and propagation of flame, this being determined in accordance with TL approved procedures.

6. Means of escape and arrangement

6.1 Above the bulkhead deck or the lowest open deck there shall be at least two means of escape from each main vertical zone or similarly restricted space or group of spaces at least one of which shall give access to a stairway forming a vertical escape or to doors to an open deck or a combination thereof.

6.2 Internal stairways connecting only two decks need only be enclosed at one deck by means of divisions and self-closing doors having the structural fire protection time as required in Table 20.1 for divisions separating those areas which each stairway serves.

6.3 Lift trunks shall be fitted such as to prevent the passage of smoke and flame from one deck to another and shall be provided with means of closing so as to permit the control of draught and smoke.

6.4 In accommodation, service spaces, control stations, corridors and stairways, air spaces behind ceilings, panelling or linings shall be suitably divided by close-fitting draught stops not more than 14 m apart.

7. Openings in fire-resisting divisions

7.1 Except for any hatches between cargo, special category, ro-ro, and store spaces and between such spaces and the weather deck, all openings shall be provided with permanently attached means of closing which shall be at least as effective for resisting fires as the divisions in which they are fitted.

7.2 It shall be possible for each door to be opened and closed from each side of the bulkhead by one person only.

7.3 Fire doors

7.3.1 Fire doors bounding major fire hazard areas and in main vertical zone bulkheads and stairway enclosures, other than power-operated watertight doors and those which are normally locked, shall be self-closing.

7.3.2 Doors required to be self-closing shall not be fitted with hold-back facilities. However, hold-back arrangements as well as power-operated drive facilities fitted with remote release devices of the fail-safe type may be utilized.

7.3.3 Doors fitted in boundary bulkheads of machinery spaces shall be reasonable gastight and self-closing.

7.3.4 In corridor bulkheads ventilation openings may be permitted in and under doors of cabins, lavatories, offices, pantries, lockers and small store rooms. Except, as permitted below, the openings shall be provided only in the lower half of the door. Where such an opening is under a door the total net area of any such opening or openings shall not exceed 0,05 m^2.

Alternatively, a non-combustible air balance duct routed between the cabin and the corridor, and located below the sanitary unit is permitted where the cross-sectional area of the duct does not exceed 0,05 m^2. Ventilation openings shall be fitted with a grille made of non-combustible material.

7.4 Outer boundaries facing open spaces

The requirements for integrity of fire-resisting divisions of the outer boundaries facing open spaces of a ship shall not apply to windows and side scuttles. Similarly, the requirements for integrity of fire- resisting divisions facing open spaces shall not apply to exterior doors in superstructures and deckhouses.

7.5 Doors in smoke-tight divisions

Doors in smoke-tight divisions shall be self-closing. Doors which are normally kept open shall close automatically or by remote control from a continuously manned control station.

Table 20.1 Structural fire protection times for separating bulkheads and decks [min]

		One side / other side	Classification of space use					
			A	**B**	**C**	**D**	**E**	**F**
Classi-fication of space use	**A** Areas of major fire hazard		60 **(1),(2)** / 60 **(1),(2)**	30 **(1)** / 60 **(1)**	**(3)** / 60 **(1),(8)**	**(1),(3),(4)** / 60 **(1)**	**(3)** / 60 **(1)**	– / 60 **(1),(7),(9)**
	B Areas of moderate fire hazard			**(1),(2),(6),(10)** / **(1),(2),(6),(10)**	**(3),(10)** / **(1),(6),(10)**	**(1),(3),(4)** / 60 **(1)**	**(3)** / **(1),(6)**	– / **(3)**
	C Areas of minor fire hazard				**(2),(3),(10)** / **(2),(3),(10)**	**(1),(3),(4)** / 30 **(1),(8)**	**(3)** / **(3)**	**(3)** / **(3)**
	D Control stations					**(1),(2),(3),(4)** / **(1),(2),(3),(4)**	**(3)** / **(1),(3),(4)**	– / **(3)**
	E Evacuation stations and escape routes						**(2),(3)** / **(2),(3)**	– / **(3)**
	F Open spaces							– / –

Explanation of the remarks:

The figures on either side of the diagonal line represent the required structural fire protection time for the protection system on the relevant side of the division. When steel construction is used and two different structural fire protection times are required for a division in the Table, only the greater one need to be applied.

(1) *The upper side of the decks of spaces need not be insulated.*

(2) *Where adjacent spaces are in the same alphabetical category and a note 2 appears, a bulkhead or deck between such spaces need not be fitted if deemed unnecessary by national regulations. For example, a bulkhead need not be required between two store-rooms. A bulkhead is, however, required between a machinery space and a special category space even though both spaces are in the same category.*

(3) *No structural fire protection requirements; however smoke-tight division made of non-combustible or fire-restricting material is required.*

(4) *Control stations which are also auxiliary machinery spaces shall be provided with 30 min structural fire protection.*

(5) *There are no special requirements for material or integrity of boundaries where only a dash appears in the Table.*

(6) *The fire protection time is 0 min and the time for prevention of passage of smoke and flame is 30 min as determined by the first 30 min of the standard fire test.*

(7) *Fire-resisting divisions need not comply with A.2.1.6.5.*

(8) *Fire-resisting divisions adjacent to void spaces need not comply with A.2.1.6.5.*

(9) *The fire protection time may be reduced to 0 min for those parts of open ro-ro spaces which are not essential parts of ship's main load-carrying structure, where the crew need not have access to them during any emergency.*

(10) *Smoke tightness is not required if the divisions separate corridors, accommodation spaces or isolated lockers and small store-rooms in accommodation areas (lockers or store-rooms having areas less than 4m^2 and no flammable liquids inside) from each other.*

8. Ventilation

8.1 The main inlets and outlets of all ventilation systems shall be capable of being closed from outside the spaces being ventilated. In addition such openings to areas of major fire hazard shall be capable of being remotely closed from a continuously manned control station.

8.2 All ventilation fans shall be capable of being stopped from outside the spaces which they serve, and from outside the spaces in which they are installed. Ventilation fans serving areas of major fire hazard shall be capable of being remotely operated from a continuously manned control station. The means provided for stopping the power ventilation to the machinery space and those for stopping the ventilation of other spaces shall be clearly separated from each other.

8.3 In general, the ventilation fans shall be disposed that the ducts reaching the various spaces remain within the main vertical zone.

8.4 The ventilation of assembly stations shall be separated from areas of major fire hazard. Ventilation ducts for areas of major fire hazard shall not pass through other spaces and ventilation ducts of other spaces shall not pass through areas of major fire hazard, unless the ducts are of an approved 60 minutes structural fire protection standard. Ventilation outlets from areas of major fire hazard shall not terminate within a distance of 1 m from any control station, evacuation station or external escape route.

In addition, exhaust ducts from galley ranges shall be fitted with:

- A grease trap readily movable for cleaning unless an alternative approved grease removal system is fitted

- A fire damper located in the lower end of the duct which is automatically and remotely operated, and in addition a remotely operated fire damper located in the upper end of the duct

- A fixed means for extinguishing a fire within the duct in accordance with Chapter 107 - Ship Operation Installations and Auxiliary Systems, Section 9,K.

- Remote control arrangements for shutting off the exhaust fans and supply fans, for operating the fire dampers mentioned above and for operating the fire-extinguishing system, which shall be placed in a position close to the entrance to the galley. Where a multi-branch system is installed, means shall be provided to close all branches exhausting through the same main duct before an extinguishing medium is released into the system.

- Suitably located hatches for inspection and cleaning

8.5 Where a ventilation duct passes through a fire-resisting division, a fail safe automatic closing fire damper shall be fitted adjacent to the division if the duct has a free cross-sectional area exceeding 0,075 m^2 or a main vertical zone division is penetrated. The duct between the division and the damper- shall be of steel or other equivalent material and insulated to the same standard as required for the fire-resisting division. The fire damper may be omitted where ducts pass through spaces surrounded by fire-resisting divisions without serving those spaces providing that the duct has the same structural fire protection time as the division it penetrates. Where a ventilation duct passes through a smoke-tight division, a smoke damper shall not be fitted at the penetration unless the duct which passes through the space does not serve that space.

8.6 Where ventilation systems penetrate decks, the arrangements shall be such that the effectiveness of the deck in resisting fire is not thereby impaired and precautions should be taken to reduce the likelihood of smoke and hot gases passing from one deck to another.

8.7 All dampers fitted on fire-resisting or smoke-tight divisions shall also be capable of being manually closed from each accessible side of the division in

which they are fitted, except of those dampers fitted on ducts serving spaces not normally manned such as stores and toilets that may be manually operated only from outside the served spaces. All dampers shall be capable of being remotely closed.

8.8 Duct material

Notwithstanding the provisions made in Chapter 107 - Ship Operation Installations and Auxiliary Systems, Section 11, G.4., ducts shall be made of non-combustible or fire-restricting material. Short ducts, however, may be of combustible materials subject to the following conditions:

- Their cross section does not exceed 0,02 m^2.
- Their length does not exceed 2 m.
- They may only be used at the terminal end of the ventilation system.
- They shall not be situated less than 600 mm from an opening in a fire-resisting division.
- Their surfaces have low flame spread characteristics.

9. Fire detection system

9.1 Notwithstanding the provisions of Chapter 107 - Ship Operation Installations and Auxiliary Systems, Section 9, C., the subsequent requirements apply unless hull, superstructures, structural bulkheads, decks and deckhouses are constructed of steel or equivalent material and all divisions, ceilings, linings and insulation are made from approved non-combustible materials.

9.2 Areas of major and moderate fire hazard and other enclosed spaces not regularly occupied within accommodation and service space areas, such as cabins, store rooms, toilets, stairway enclosures, corridors and escape routes shall be provided with an approved automatic smoke detection system and manually operated call points complying with the requirements of Chapter 105 - Electrical Installations, Section 9 to indicate at the control station the location of the outbreak of a fire in all normal operating conditions of the installations. Detectors operated by heat instead of smoke may be installed in galleys. Manually operated call points shall be installed throughout accommodation, corridors and stairway enclosures, service spaces and where necessary control stations. One manually operated call point shall be located at each exit from these spaces and from areas of major fire hazard.

10. Fixed sprinkler system

10.1 Accommodation where sleeping berths are provided, having a total deck area greater than 50 m^2 (including corridors serving such accommodation), shall be protected by an automatic sprinkler, fire detection and fire alarm system based on approved standards.

10.2 Plans of the system shall be displayed at each operating station. Suitable arrangements shall be made for the drainage of water discharged when the system is activated.

11. Further requirements

Additional requirements concerning tanks for flammable liquids, spaces with cargo, fire detection and extinguishing systems are given in Chapter 105 – Electrical Installations, Section 9, C.3. and Section 15, D. as well as in Chapter 107 - Ship Operation Installations and Auxiliary Systems, Section 9.

D. Protection of Special Category Spaces and Ro-Ro Spaces

1. Structural protection

1.1 Boundaries of special category spaces shall be insulated in accordance with Table 20.1. The standing deck of a special category space need only be insulated on the underside if required.

1.2 Indicators shall be provided on the navigating bridge or ship control station which should indicate when any door leading to or from the special category space or ro-ro space is closed.

1.3 Fire doors in boundaries of special category spaces leading to spaces below the vehicle deck shall be arranged with coamings of a height of at least 100 mm.

2. Further requirements

Further requirements apart from the structural fire protection are defined in Chapter 107 - Ship Operation Installations and Auxiliary Systems, Section 9.

E. Requirements for Flight Decks and Hangars

1. Flight deck structure

1.1 In general, the construction of the flight deck shall be of steel or other equivalent material, see also Section 8. If the flight deck forms the deck head of a deckhouse or superstructure it shall be insulated according to an approved 60 minutes fire protection standard.

1.2 If **TL** permits aluminium or other low melting point metal construction that is not made equivalent to steel, the following provisions shall be satisfied.

1.2.1 If the flight deck is cantilevered over the side of the ship after each fire on the ship or on the flight deck, the flight deck shall undergo a structural analysis to determine its suitability for further use.

1.2.1 If the flight deck is located above a ship's deckhouse or similar structure, the following conditions shall be satisfied:

- The deckhouse top and bulkheads under the flight deck shall have no openings
- Windows under the flight deck shall be provided with steel shutters
- After each fire on the flight deck or in close proximity, the flight deck shall undergo a structural analysis to determine its suitability for further use

1.3 Drainage facilities in way of flight decks shall be constructed of steel and shall lead directly over board, independent of any other system and shall be designed so that drainage does not fall onto any part of the ship.

1.4 Flight decks shall be provided with both, a main and an emergency means of escape and access for fire fighting and rescue personnel. These shall be located as far apart from each other as is practicable and preferably on opposite sides of the flight deck.

2. Further requirements

All necessary requirements for carefully selected equipment and for fire fighting measures on the flight deck and in hangars as well as for aircraft refuelling are defined in Chapter 107 - Ship Operation Installations and Auxiliary Systems, Section 9,I. and in Section 8.

SECTION 21

RESIDUAL STRENGTH

A. General

1. Definition

Residual strength is the remaining global strength capacity of the hull structure after damage due to military effects. The character and extent of damage for each investigated case, as well as the assumed environmental conditions, like maximum wind speed, sea state, etc., have to be defined by the Naval Authority. Based on this information, the buckling and yield capacities of the components which remain undamaged have to be summarized by the shipyard and approved by TL.

2. Class Notation

If the strength capacity of the remaining intact hull components is sufficient to allow the naval ship to perform tasks as defined by the Naval Authority, the Class Notation **RSM** for residual strength due to military effects can be assigned. See also Chapter 101 - Classification and Surveys (Naval Ship Technology), Section 2

3. Damage stability

Ships with Class Notation **RSM** have also to proof satisfactory damage stability under the assumption of exactly the same conditions on which the residual strength calculations are based, see Section 2.

4. Damaged structures

The damaged structures have to be defined by the Naval Authority.

Note:

For loads causing damage from external or internal explosions see also Section 5, H.2, for loads from underwater explosion see Section 16, Fig. 16.7.

B. Requirements for Residual Strength

For ships with Class Notation **RSM** the following requirements for the remaining intact components are to be applied. These requirements are minimum requirements and may be extended by the Naval Authority or the shipyard.

1. Plating

1.1 Plane plate fields

The plate thickness of structural members under compression shall not be less than:

$$t = c \cdot b \sqrt{\frac{R_m}{E} \cdot \gamma_m + t_K} \quad [mm]$$

c = 0,78 for plate panels with support at all sides

= 1,62 for plate panels with one unsupported side

b = spacing of the loaded side of the plate [mm]

R_m = tensile strength [N/mm^2] according to Section 3, B. and D.

E = modulus of elasticity [N/mm^2] according to Section 3, B. and D.

γ_m = partial safety factor for material resistance according to Section 4, Table 4.1

t_K = corrosion addition [mm] according to Section 4,F.

1.2 Curved plate fields

The plate thickness of structural members under compression shall not be less than:

$$t = \frac{0{,}044 \cdot r \cdot R_m \cdot \gamma_m}{E} + t_K \quad [mm]$$

For large radii the thickness t between 2 stiffeners need not be more than the thickness according to 1.1

r = radius of plate curvature [mm]

for all other parameters see 1.1

2. Stiffeners and girders

2.1 Lateral buckling

The following condition has to be met for structural members under compression:

$$\frac{I}{A} \geq c \cdot \frac{R_m}{E} \cdot \gamma_m \cdot \ell^2 \quad [cm^2]$$

I = moment of inertia [cm^4] of the stiffener including adjacent plate or of the column

A = Area [cm^2] of the stiffener including adjacent plate or of the column

c = 0,022 for stiffeners or simply supported columns

= 0,011 for elastically restraint columns

R_m = tensile strength [N/mm^2] according to Section 3,B. and D.

γ_m = partial safety factor for material resistance according to Section 4, Table 4.1

ℓ = unsupported span [m]

2.2 Secondary stiffeners

The length ℓ of stiffeners should not be larger than 12·h, where h is the height of the stiffener.

2.3 Primary members acting as columns

The length ℓ of primary members forming buckling resistant columns should be the distance between two watertight bulkheads. Primary members not forming box girders have to be secured against torsional buckling. These members are to be carefully connected to their transverse supporting members.

3. Proof of overall residual strength

3.1 The bending moments and shear forces in damaged condition are to be applied to a cross section formed by those structures which are considered to remain intact in damaged condition, see Section 6, B.3.

All other parts of the hull cross section are assumed to be destroyed or lost. If more than one member/column is forming the residual hull cross section, effects of second order have to be considered.

Structures, which do not comply with 1.1 to 2.2 i.e. the bottom structure or other structural members forming boxes can be considered as effective for residual strength with 50 % of their individual capacity according Section 4, E.

3.2 For non-linear calculations (ultimate load/ ultimate strength) the following conditions shall be satisfied:

- vertical bending and shear

$$\frac{M_{py}}{\gamma_m} \geq M_{T3}$$

$$\frac{Q_{pz}}{\gamma_m} \geq Q_{T3}$$

- horizontal bending and shear

$$\frac{M_{pz}}{\gamma_m} \geq M_{WH}$$

$$\frac{Q_{py}}{\gamma_m} \geq Q_{WH}$$

M_{T3} = total longitudinal bending moment for the residual strength condition [kNm] according to Section 6, C.3.1.3

Q_{T3} = total shear force for the residual strength condition [kN] according to Section 6, C.3.2.3

M_{WH} = horizontal wave bending moment [kNm] according to Section 6

Q_{WH} = horizontal wave shear force [kN] according to Section 6

M_{py}, M_{pz} = bending capacity [kNm] of the cross section formed by the members relevant for residual strength according to Section 4, E. around the horizontal and vertical axis respectively

Q_{pz}, Q_{py} = shear capacity [kN] of the cross section formed by the members relevant for residual strength in vertical and horizontal direction respectively

4. Materials

4.1 Materials of elements which are relevant for residual strength are not to be of lower class than III as defined in Section 3, Table 3.3.

4.2 If strength members relevant for residual strength are made of aluminium, these members shall be insulated with a material ensuring a fire protection time of at least 60 minutes, see also Section 20.

C. Measures to Improve Residual Strength

1. General

Herein some possible measures to improve residual strength are described. Depending on the type of naval ship additional or other measures may be applied.

These measures have to be agreed with the Naval Authority case by case.

2. Longitudinal box girders

It is recommended to provide several longitudinal box girders immediately below the weather deck and at the bottom of the hull, see Fig. 21.1. The box girders can be used as cable channels to safeguard power and communication.

3. Special stringers

Reinforced longitudinal stringers are recommended in the lower range of the side shell above the double bottom, see Fig. 21.1, detail C.

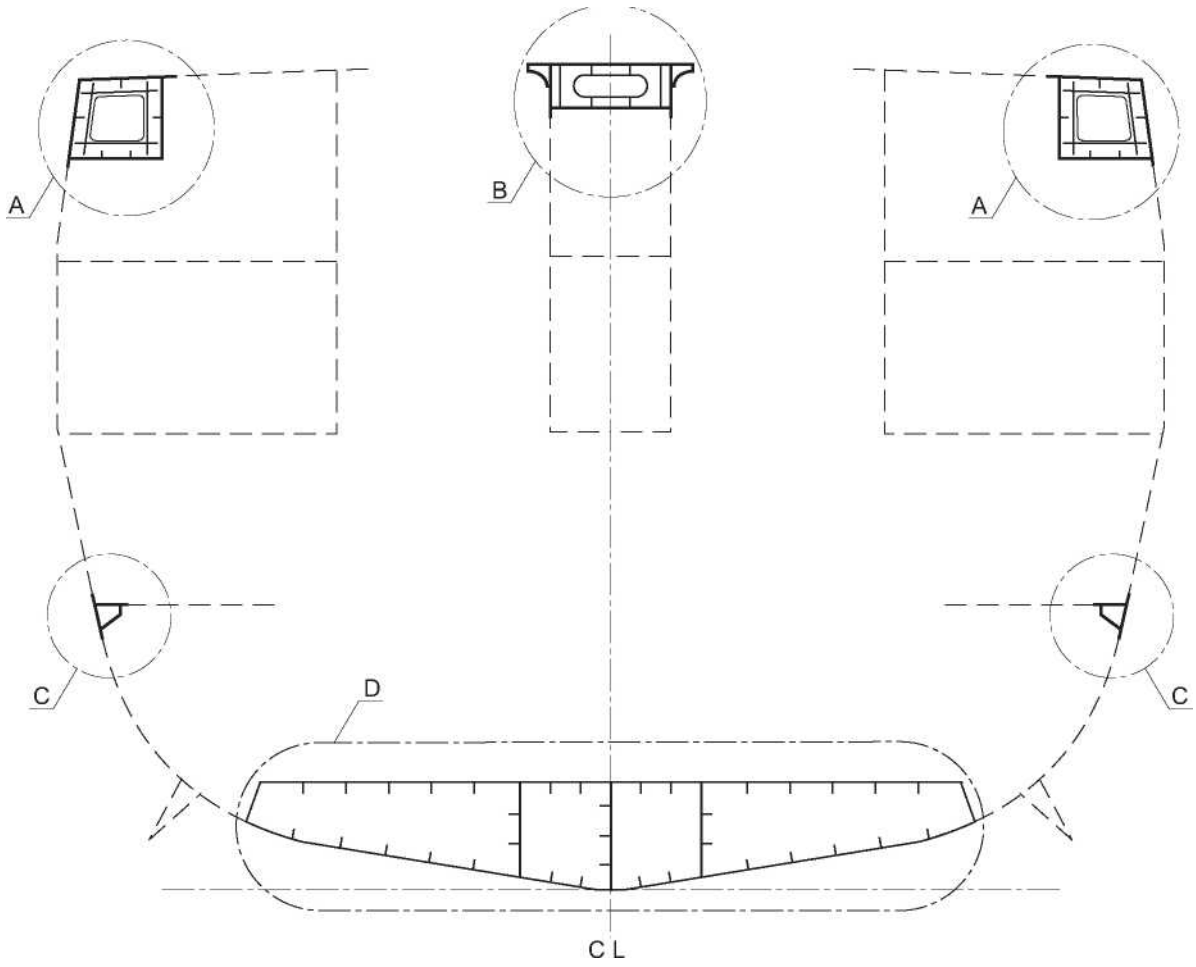

Fig. 21.1 Example for longitudinal box girders and special stringers

SECTION 22

AMPHIBIOUS WARFARE SHIPS

A. General

1. Validity

The requirements given in all other Sections apply unless stated otherwise in this Section.

2. Scope

The requirements in this Section may be applied to all types of amphibious warfare ships, like Amphibious Assault Ship (LHD), Dock Landing Ship (LSD), Tank Landing Ship (LST) and Infantry Landing Craft (LCI). The flight operation aspects of the two first types are treated in Section 23.

B. Bow Doors and Inner Doors

1. General, definitions

1.1 Applicability

1.1.1 These requirements apply to the arrangement, strength and securing of bow doors and inner doors leading to a complete or longer forward enclosed superstructure.

1.1.2 For naval ships the side-opening type of bow door may be applied.

These doors are opened either by rotating outwards about a vertical axis through two or more hinges located near the outboard edges or by horizontal translation by means of linking arms arranged with pivoted attachments to the door and the ship. It is anticipated that side-opening bow doors are arranged in pairs.

1.1.3 Other types of bow doors will be specially considered in association with the applicable requirements of these Rules.

1.2 Arrangement

1.2.1 Bow doors are to be situated above the free-board deck. A watertight recess in the freeboard deck located forward of the collision bulkhead and above the deepest waterline fitted for arrangement of ramps or other related mechanical devices, may be regarded as a part of the freeboard deck for the purpose of this requirement.

1.2.2 An inner door is to be provided. The inner door is to be part of the collision bulkhead. The inner door needs not be fitted directly above the collision bulkhead below, provided it is located within the limits specified in Section 2, C.2.3 for the position of the collision bulkhead. A vehicle ramp may be arranged for this purpose, provided its position complies with Section 2, C.2.3. If this is not possible, a separate inner weathertight door is to be installed, as far as practicable within the limits specified for the position of the collision bulkhead.

1.2.3 Bow doors are to be so fitted as to ensure tightness consistent with operational conditions and to give effective protection to inner doors. Inner doors forming part of the collision bulkhead are to be weathertight over the full height of the space for military vehicles/cargo and arranged with fixed sealing supports on the aft side of the doors.

1.2.4 Bow doors and inner doors are to be so arranged as to preclude the possibility of the bow door causing structural damage to the inner door or to the collision bulkhead in the case of damage to or detachment of the bow door. If this is not possible, a separate inner weathertight door is to be installed, as indicated in 1.2.2.

1.2.5 The requirements for inner doors are based on the assumption that the vehicles are effectively lashed and secured against movement in stowed position.

1.3 Definitions

1.3.1 Securing device

Securing device is a device used to keep the door closed by preventing it from rotating about its hinges.

1.3.2 Supporting device

Supporting device is a device used to transmit external or internal loads from the door to a securing device and from the securing device to the ship's structure, or a

device other than a securing device, such as a hinge, stopper or other fixed device, that transmits loads from the door to the ship's structure.

1.3.3 Locking device

Locking device is a device that locks a securing device in the closed position.

2. Strength criteria

2.1 Primary structure and securing and supporting devices

2.1.1 Scantlings of the primary members, securing and supporting devices of bow doors and inner doors are to be designed such as the shell structure defined in Section 7 using design loads defined in 3.

2.1.2 The buckling strength of primary members is to be verified according to Section 4, H.

2.1.3 For steel to steel bearings in securing and supporting devices, the nominal bearing pressure calculated by dividing the design force by the projected bearing area is not to exceed 0,8 · R_{eH}, where R_{eH} is the yield stress of the bearing material. For other bearing materials, the permissible bearing pressure is to be determined according to the manufacturer's specification.

2.1.4 The arrangement of securing and supporting devices is to be such that threaded bolts do not carry support forces. The maximum tension stress in way of threads of bolts not carrying support forces is not to exceed 0,5 · R_{eH} [N/mm^2].

3. Design loads

3.1 Bow doors

3.1.1 The external design pressure to be considered for the scantlings of primary members of bow doors is the pressure p_e specified in Section 5, C.2. The relevant flare and entry angles are defined in Fig. 22.1.

3.1.2 The design external forces for determining scantlings of securing and supporting devices of bow doors are not to be less than:

$F_x = p_e \cdot A_x$ [kN]

$F_y = p_e \cdot A_y$ [kN]

$F_z = p_e \cdot A_z$ [kN]

A_x = area [m^2] of the transverse vertical projection of the door between the levels of the bottom of the door and the upper deck or between the bottom of the door and the top of the door, whichever is the lesser

A_y = area [m^2] of the longitudinal vertical projection of the door between the levels of the bottom of the door and the upper deck or between the bottom of the door and the top of the door, whichever is the lesser

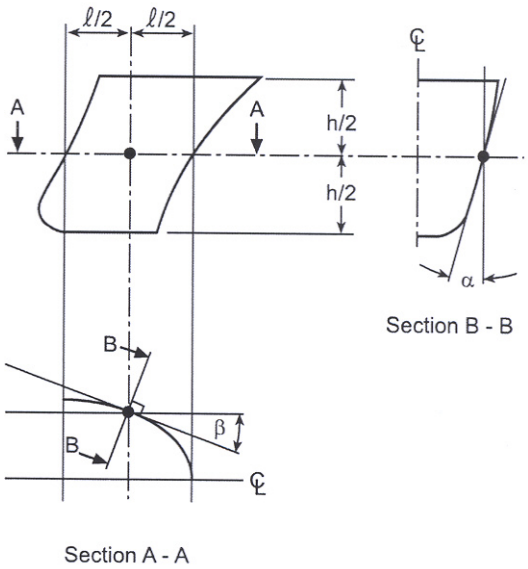

Fig. 22.1 Definition of height and length of bow doors

A_z = area [m^2] of the horizontal projection of the door between the levels of the bottom of the door and the upper deck or between the bottom of the door and the top of the door, whichever is the lesser

for A_x, A_y and A_z see also Fig. 22.2.

h = height [m] of the door between the levels of the bottom of the door and the upper deck or between the bottom of the door and the top of the door, whichever is the lesser

ℓ = length [m] of the door at a height h/2 above the bottom of the door

3.1.3 For bow doors, including bulwark, of unusual form or proportions, e.g. ships with a rounded nose and large stem angles, the areas and angles used for determination of the design values of external forces may require to be specially considered.

3.1.4 For side-opening doors the closing moment M_z under external loads is to be taken as:

M_z = $F_x \cdot a + F_y \cdot b$ [kNm]

a = horizontal distance [m] from door pivot axle to the centroid of the transverse vertical projected area A_x of one leave of the door, as shown in Fig. 22.2

b = horizontal distance from door pivot axle to the centroid of the longitudinal vertical projected area A_y of one leave of the door, as shown in Fig. 22.2

3.1.5 Between the upper and the lower pivot an additional moment has to be absorbed:

M_y = $F_z \cdot c - 10 \cdot W \cdot d$ [kNm]

c = horizontal distance [m] from door pivot axle to the centroid of the horizontal projected area A_z of one leave of the door, as shown in Fig. 22.2

W = mass of one door leave [t]

d = horizontal distance from the door pivot to the centre of gravity of leave mass [m], as shown in Fig. 22.2

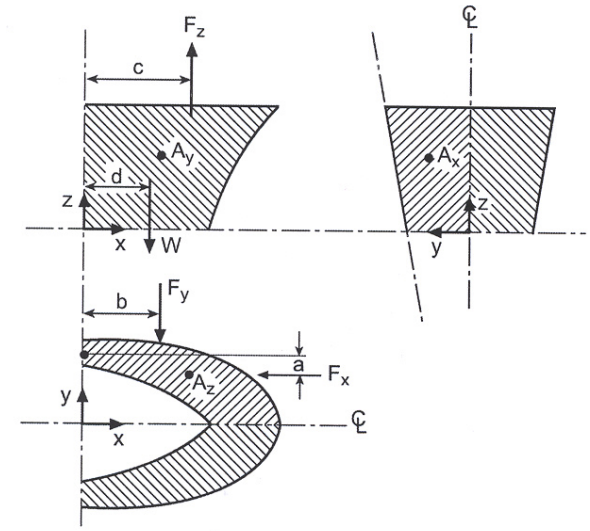

Fig. 22.2 Areas, centres and forces at side - opening bow doors

3.2 Inner doors

3.2.1 The external design pressure p_e considered for the scantlings of primary members, securing and supporting devices and surrounding structure of inner doors is to be taken as the greater of the following:

$$p_e = 0{,}45 \cdot L1 \quad [\text{kN/m}^2] \text{ or}$$

$$= 10 \cdot h \quad [\text{kN/m}^2]$$

L1 = **L** [m], but ≤ 200 m

h = distance [m] from the load point to the top of the cargo space

3.2.2 The design internal pressure p_i considered for the scantlings of securing devices of inner doors is not to be less than:

p_i = 25 kN/m^2

4. Scantlings of bow doors

4.1 General

4.1.1 The strength of bow doors is to be commensurate with that of the surrounding structure.

4.1.2 Bow doors are to be adequately stiffened and means are to be provided to prevent lateral or vertical movement of the doors when closed.

4.2 Plating and secondary stiffeners

4.2.1 The thickness of the bow door plating is not to be less than the side shell thickness according to Section 7, B.2., using bow door stiffener spacing, but in no case less than the required minimum thickness of the plating according to Section 4, Table 4.2.

4.2.2 The section modulus of horizontal or vertical stiffeners is not to be less than that required for framing at the position of the door according to Section 7. Consideration is to be given, where necessary, to differences in fixity between ship's frames and bow doors stiffeners.

4.3 Primary structure

4.3.1 The bow door secondary stiffeners are to be supported by primary members constituting the main stiffening of the door.

4.3.2 The primary members of the bow door and the hull structure in way are to have sufficient stiffness to ensure integrity of the boundary support of the door.

4.3.3 Scantlings of the primary members are generally to be verified by direct calculations in association with the external design pressure as referenced in 3.1.1 and design procedure defined in 2.1.1. Normally, formulae for simple beam theory may be applied.

5. Scantlings of inner doors

5.1 General

5.1.1 For determining scantlings of the primary members the requirements of 4.3.3 apply in conjunction with the loads specified in 3.2.

5.1.2 Where inner doors also serve as vehicle ramps, the scantlings are not to be less than those required for vehicle decks as per Section 8, B.2.

5.1.3 The distribution of the forces acting on the securing and supporting devices is generally to be verified by direct calculations taking into account the flexibility of the structure and the actual position and stiffness of the supports.

6. Securing and supporting of bow doors

6.1 General

6.1.1 Bow doors are to be fitted with adequate means of securing and supporting so as to be commensurate with the strength and stiffness of the surrounding structure. The hull supporting structure in way of the bow doors is to be suitable for the same design loads and design stresses as the securing and supporting devices. Where packing is required, the packing material is to be of a comparatively soft type, and the supporting forces are to be carried by the steel structure only. Other types of packing may be considered. The maximum design clearance between securing and supporting devices is generally not to exceed 3 mm.

A means is to be provided for mechanically fixing the door in the open position.

6.1.2 Only the active supporting and securing devices having an effective stiffness in the relevant direction are to be included and considered to calculate the reaction forces acting on the devices. Small and/or flexible devices such as cleats intended to provide load compression of the packing material are not generally to be included in the calculations called for in 6.2.4.

The number of securing and supporting devices is generally to be the minimum practical whilst taking into account the redundancy requirements given in 6.2.5 and the available space for adequate support in the hull structure.

6.2 Scantlings

6.2.1 Securing and supporting devices are to be adequately designed so that they can withstand the reaction forces according to the design procedure defined in 2.1.1.

6.2.2 For side-opening doors the reaction forces applied on the effective securing and supporting devices assuming the door as a rigid body are determined for the following combination of external loads acting simultaneously together with the self weight of the door:

6.2.2.1 Case 1: F_x, F_y and F_z acting on both doors

6.2.2.2 Case 2: $0,7 \cdot F_x$ and $0,7 \cdot F_z$ acting on both doors and $0,7 \cdot F_y$ acting on each door separately.

The forces F_x, F_y and F_z are to be determined as indicated in 3.1.2 and applied at the centroid of the projected areas.

6.2.3 The support forces as determined according to 6.2.2 shall generally result in a zero moment about the transverse axis through the centroid of the area A_x.

6.2.4 The distribution of the reaction forces acting on the securing and supporting devices may require to be verified by direct calculations taking into account the flexibility of the hull structure and the actual position and stiffness of the supports. This is, for instance, the case when the bow door is supported statically undetermined.

6.2.5 The arrangement of securing and supporting devices in way of these securing devices is to be designed with redundancy so that in the event of failure of any single securing or supporting device the remaining devices are capable of withstanding the reaction forces without exceeding by more than 20 per cent the permissible stresses

.

6.2.6 All load transmitting elements in the design load path, from door through securing and supporting devices into the ship structure, including welded connections, are to be of the same strength standard as required for the securing and supporting devices.

6.2.7 For side-opening doors, thrust bearings are to be provided in way of girder ends at the closing of the two leaves to prevent one leaf to shift towards the other one under effect of unsymmetrical pressure. An example for a thrust bearing is shown in Fig. 22.3. Securing devices are to be provided so that each part of the thrust bearing can be kept secured on the other part. Any other arrangement serving the same purpose may be accepted.

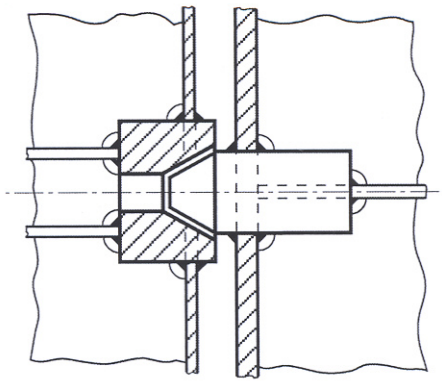

Fig. 22.3 Thrust bearing for doors

7. Arrangement of securing and locking devices

7.1 Systems for operation

7.1.1 Securing devices are to be simple to operate and easily accessible.

Securing devices are to be equipped with mechanical locking arrangement, e.g. self locking or separate arrangement, or to be of the gravity type. The opening and closing systems as well as securing and locking devices are to be interlocked in such a way that they can only operate in the proper sequence.

7.1.2 Bow doors and inner doors giving access to vehicle decks are to be provided with an arrangement for remote control, from a position above the freeboard deck of:

- The closing and opening of the doors

- Associated securing and locking devices for every door

Indication of the open/closed position of every securing and locking device is to be provided at the remote control stations. The operating panels for operation of doors are to be inaccessible to unauthorized persons. A notice plate, giving instructions to the effect that all securing devices are to be closed and locked before leaving harbour, is to be placed at each operating panel and is to be supplemented by warning indicator lights.

7.1.3 Where hydraulic securing devices are applied, the system is to be mechanically lockable in closed position. This means that, in the event of loss of the hydraulic fluid, the securing devices remain locked.

The hydraulic system for securing and locking devices is to be isolated from other hydraulic circuits, when in closed position.

7.2 Systems for indication/monitoring

The requirements according 7.2.3 - 7.2.6 are optional and have to be agreed between Naval Authority and TL.

7.2.1 Separate indicator lights are to be provided on the navigation bridge and on the operating panel to show that the bow door and inner door are closed and that their securing and locking devices are properly positioned. Deviations from the correct closing state are to be indicated by acoustic and visual alarms. The indication panel is to be provided with a lamp test function. It shall not be possible to turn off the indicator lights.

7.2.2 The indicator system is to be designed on the self-monitoring principle and is to be alarmed by visual and audible means if the door is not fully closed and not fully locked or if securing devices become open or locking devices become unsecured. The power supply for the indicator system is to be independent of the power supply for operating and closing doors. The sensors of the indicator system are to be protected from water, icing and mechanical damages. Degree of protection: at least IP 56.

7.2.3 The indication panel on the navigation bridge is to be equipped with a selector switch "harbour/sea voyage", so arranged that alarm is given if the ship leaves harbour with the bow door or inner door not closed and with any of the securing devices not in the correct position.

7.2.4 A water leakage detection system with audible alarm and television surveillance is to be arranged to provide an indication to the navigation bridge and to the machinery control centre resp. damage control centre of leakage through the inner door.

7.2.5 For the space between the bow door and the inner door a television surveillance system is to be fitted with a monitor on the navigation bridge and in the machinery control centre resp. damage control centre. The system must monitor the position of doors and a sufficient number of their securing devices. Special consideration is to be given for lighting and contrasting colour of objects under surveillance.

7.2.6 A drainage system is to be arranged in the area between bow doors and ramp, as well as in the area between the ramp and inner door where fitted. The system is to be equipped with an acoustic alarm function to the navigation bridge for water level in these areas exceeding 0,5 m above the vehicle deck level.

7.2.7 For indication and monitoring systems see also Chapter 105 - Electrical Installations, Section 9, C.

8. Operating and maintenance manual

8.1 For all types of amphibious warfare ships with bow doors except of the Landing Ship Infantry (LSI) type with limited size the following procedures have to be applied.

8.2 An operating and maintenance manual for the bow door and inner door has to be provided on board and contain necessary information on:

- Description of the door system and design drawings

- Service conditions, e.g. service restrictions, emergency operations, acceptable clearances for supports

- Maintenance and function testing

- Register of inspections and repairs

This manual has to be presented at the periodical surveys to TL for approval.

Note:
It is recommended that inspections of the door supporting and securing devices be carried out by the ship's staff at monthly intervals and/or following incidents that could result in damage, including heavy weather and/or contact in the region of the shell doors.

8.3 Documented operating procedures for closing and securing the bow door and inner doors are to be kept on board and posted at an appropriate place.

C. Side Shell Doors and Stern Doors

1. General

1.1 These requirements apply to side shell doors abaft the collision bulkhead and to stern doors leading into enclosed spaces.

1.2 For the definition of securing, supporting and locking devices see B. 1.3.

2. Arrangement

2.1 Stern doors and side shell doors of landing ships, helicopter carriers, etc. may be either below or above the freeboard deck.

2.2 Side shell doors and stern doors are to be so fitted as to ensure tightness and structural integrity commensurate with their location and the surrounding structure.

2.3 Where the sill of any side shell door is below the uppermost load line, the arrangement is to be specially considered. In case of ice strengthening see Section 13.

2.4 Doors should preferably open outwards.

3. Strength criteria

The requirements of B.2. apply.

4. Design loads

The design forces considered for the scantlings of primary members, securing and supporting devices of side shell doors and stern doors are to be not less than the greater of the following values:

4.1 Design forces for securing or supporting devices of doors opening inwards:

external force: $F_e = A \cdot p_e + F_p$ [kN]

internal force: $F_i = F_o + 10 \cdot W$ [kN]

4.2 Design forces for securing or supporting devices of doors opening outwards:

external force: $F_e = A \cdot p_e$ [kN]

internal force: $F_i = F_o + 10 \cdot W + F_p$ [kN]

4.3 Design forces for primary members: external force:

external force: $F_e = A \cdot p_e$ [kN]

internal force: $F_i = F_o + 10 \cdot W$ [kN]

A = area of the door opening [m^2]

W = mass of the door [t]

F_p = total packing force [kN], where the packing line pressure is normally not to be taken less than 5 N/mm

F_o = the greater of F_c or $5 \cdot A$ [kN]

F_c = accidental force [kN] due to loosened cargo/vehicles etc., to be uniformly distributed over the area A and not to be taken less than 300 kN. For small doors such as bunker doors and pilot doors, the value of F_c may be appropriately reduced.

However, the value of F_c may be taken as zero, provided an additional structure such as an inner ramp is fitted, which is capable of protecting the door from accidental forces due to loosened cargo/vehicles.

p_e = p_s

= External design pressure for the ship's side according to Section 5, C.1. is to be determined at the centre of gravity of the door opening with height h_G above base line [m]. p_{Sdyn} is not to be less than 25 [kN/m^2]

5. Scantlings

5.1 General

The requirements of B.4.1 apply analogously with the following additions:

- Where doors also serve as vehicle ramps, the design of the hinges shall take into account the ship's angle of trim and heel which may result in uneven loading on the hinges.

- Shell door openings are to have well-rounded corners and adequate compensation is to be arranged at the edges by web frames and stringers or equivalent.

5.2 Plating and secondary stiffeners

The requirements of B.4.2.1 and B.4.2.2 apply analogously with the following additions:

Where doors serve as vehicle ramps, plate thickness and stiffener scantlings are to comply with the requirements of Section 8, B.2.

5.3 Primary structure

The requirements of B.4.3 apply analogously taking into account the design loads specified in 4.

6. Securing and supporting of side shell and stern doors

6.1 General

6.2 Scantlings

The requirements of B.6.2.1, B.6.2.5, B.6.2.6 and B.6.2.7 apply analogously taking into account the design loads specified in 4.

7. Arrangement of securing and locking devices

7.1 Systems for operation

7.1.1 The requirements of B.7.1.1 apply.

7.1.2 Doors which are located partly or totally below the freeboard deck with a clear opening area greater than 6 m^2 are to be provided with an arrangement for remote control, from a position above the freeboard deck according to B.7.1.2.

7.1.3 The requirements of B.7.1.3 apply.

7.2 Systems for indication/monitoring

7.2.1 The requirements of B.7.2.1, B.7.2.2 and B.7.2.3 apply analogously to doors leading directly to special category spaces or ro-ro spaces, as defined in Section 20, A.2.2, through which such spaces may be flooded.

7.2.2 As an option to be agreed between the Naval Authority and TL, a water leakage detection system with audible alarm and television surveillance may be arranged to provide an indication to the navigation bridge and to the machinery control centre resp. damage control centre of any leakage through the doors.

8. Operating and maintenance manual

The requirements of B.8. apply analogously.

D. Well Dock

If for the ship types Landing Ship Dock Helicopter and Landing Ship Dock a well dock is provided at the rear part of the ship with the aim to harbour landing craft, the following requirements have to be met.

1. Arrangement

Accesses from the dock to other closed structures of the ship are to be arranged above the deepest waterline of the ship considering all possible operating and damaged conditions and must be provided with weathertight doors.

Watertight shell doors are to be arranged.

2. Steel structure

2.1 The complete dock must be enclosed by a watertight bottom and watertight walls up to the bulk-head deck.

2.2 Load cases

The following load cases have to be considered:

2.2.1 Seagoing condition

For this condition it is assumed that the stern door is closed and no water is in the dock. The following loads are acting on the steel structure:

- Static load from the weight of the landing craft on the bottom of the dock

- Dynamic load from the weight of the landing craft according to the vertical acceleration component a_z of the ship according to Section 5, B.1.

- If military vehicles/materials are transported instead of landing craft, loads on internal decks according to Section 5, F.

- Lashing forces for landing craft or vehicles created by the transverse and longitudinal acceleration components of the ship according to Section 5, B.1. acting on planned lashing points to be defined in the Operating Manual, see 6.

- External sea pressure according to Section 5, C.1.

2.2.2 Dock operation

For this condition it is assumed that the ship is trimmed (if applicable), the stern door is open and the dock filled with water. It has to be defined in the Operating Manual (see 6.) up to which maximum ship speed and seaway condition dock operations shall take place. The following loads are to be applied:

- Static load p_{stat} from the water filling according to Section 5, C.1. 1.1 and dynamic load p_{dyn} from the water in the dock accelerated by the motions of the ship, see Section 5, B.1.

- Local impact forces especially to the side walls due to landing craft manoeuvres, the size of these forces have to be agreed between Naval Authority, shipyard and TL, see also Section 7, F.

- Mooring loads from the landing craft afloat in the dock, the size of these forces have to be agreed between Naval Authority, shipyard and TL

- Dynamic loads due to motion/acceleration of the ship must be taken into account in case the stern door is hinged about a horizontal axis below the sea surface

2.3 Scantlings

2.3.1 The design of the ship and its landing craft shall ensure that point loads on the dock bottom do not occur.

2.3.2 The thickness of the dock bottom shall be increased by 2 mm if vehicles and/or material shall be transported and no ceiling system is provided, see 5.

2.3.3 The formulae defined in Section 7 and Section 4 have to be applied for determining the actual dimensions.

2.4 Stern door

For the watertight stern door at the rear end of the dock also the basic requirements defined in C. are valid. In addition the loads defined in 2.2.2 have to be considered.

3. Water management

3.1 A system has to be provided to fill and empty the dock within the time defined in the building specification. For this operation two independent pumping systems have to be provided. The drain wells in the dock have to be arranged at the forward and rear end as well as on port and starboard in a way that the complete emptying of the dock also at extreme trim situations of the ship can be guaranteed. The system has to meet the requirements defined in Chapter 107 – Ship Operation Installations and Auxiliary Systems, Section 8, Q. for a ballast system for special tasks.

The flooding system must automatically activate a visual and audible flooding alarm in the complete dock area at a reasonable time before flooding starts to enable all personnel to leave the bottom of the dock and to warn the personnel of the landing craft.

3.2 Depending on the level of the well deck in the ship, a ballast system to achieve a stern trim for undisturbed landing craft traffic through the open stern door has to be provided, see Chapter 107 - Ship Operation Installations and Auxiliary Systems, Section 8, P.

4. Stability

Sufficient stability has to be proven for dock operations during intermediate stages of embarkation and disembarkation of landing craft, see Section 2.

5. Dock outfit

To enable a safe operation of the dock the following outfit has to be provided:

- Protection of the dock bottom by a ceiling system if the thickness of the bottom plating is not increased and the dock shall also be used for transport of vehicles and materials, see also Section 19, C.2.

- Protection of the side walls by a permanently mounted fender system which has to be effective for the different water levels in the dock

- A mooring system to secure the planned position of the landing craft within the dock in all operating conditions with and without water; this system has to be arranged at a side walkway of the dock or in recesses of the side walls and shall not interfere with the side shell of the landing craft

- A guide system to lead the landing craft in their planned position, if necessary

- An inclined ramp at the forward end of the dock shall be provided with a non-slip sheathing

- No electrical installations have to be provided below the waterline at the greatest draught and trim of the ship, the electrical installations above the waterline are to be considered as within protection areas, see Chapter 105 - Electrical Installations, Section 15

- Sufficient lighting to enable safe navigation and loading/unloading procedures in the dock has to be provided, see Chapter 105 - Electrical Installations, Section 11. For night operations an additional red light system is recommended

- Sufficient ventilation of the dock space with closed stern door has to be provided, see Chapter 107 - Ship Operation Installations and Auxiliary Systems, Section 11

6. Operating and maintenance manual

6.1 An operating and maintenance manual for trimming the ship, if applicable, operating the dock and for the doors enclosing it has to be provided on board and contain necessary information on:

- Definition of the maximum ship speed and maximum seaway condition for operation of the dock

- Necessary trimming measures for the ship, if applicable, before and after docking operations

- Description of dock and doors and design drawings

- Operational conditions, acceptable clearances, etc.

- Function and maintenance testing

- Register of inspection and repairs

The manual has to be submitted for approval.

6.2 Documented operating procedures for closing and securing the stern door are to be kept aboard and posted at an appropriate place.

E. References to Further Requirements for Amphibious Warfare

Besides the requirements defined in this Section the following other elements of amphibious warfare ships are defined for:

- Cranes, see Chapter 107 - Ship Operation Installations and Auxiliary Systems, Section 3, B.

- Lifts, see Chapter 107 - Ship Operation Installations and Auxiliary Systems, Section 3, D.

- Ramps, see Chapter 107 - Ship Operation Installations and Auxiliary Systems, Section 3, F.

- Aircraft handling, see Chapter 107 - Ship Operation Installations and Auxiliary Systems, Section 13

- Special requirements concerning electrical equipment and installations, see Chapter 107 - Electrical Installations, Section 15.

SECTION 23

PROVISIONS FOR FLIGHT OPERATIONS

A. General

1. Scope

Additional requirements for flight operations, like special lighting systems, communication between ship and aircraft, electronic take-off and landing aids, flight control, etc. are not subject of Classification and have to be agreed directly between Naval Authority and shipyard.

The requirements given in Section 1-22 apply unless stated otherwise in this Section.

2. Class Notation

2.1 Ships which are in the position to enable starts and landings of a greater number of different aircraft may be assigned the Class Notation **FO**, see Chapter 101 - Classification and Surveys (Naval Ship Technology), Section 2, C. Therefore in this Section the overall aspects for ships operating aircraft are summarized and references are given to other Rule Chapters and Sections, where the requirements for relevant equipment are defined.

2.2 Naval vessels with a replenishment / winching area for delivery of personnel and supplies by hovering helicopters and where no starting or landing is possible, will not get the Class Notation **FO.**

3. Documents for Approval

The following data, documents and drawings are to be submitted to TL for approval in paper form in triplicate.

3.1 Aircraft specification

The types of aircraft to operate on the naval ship have to be specified by the Naval Authority. Normally the following parameters are needed:

- Type of aircraft
- Length and width of aircraft body
- Span of wings (folded and unfolded)
- Rotor diameter
- Maximum take-off weight
- Wheel or skid configuration including individual wheel pressures
- Special requirements for aircraft handling
- Further technical characteristics for refuelling, maintenance, etc.
- Starting and landing procedure
- Highest vertical rate of descent on the deck, e.g. because of single engine failure, etc.
- Lashing systems to be provided
- Data for winching operations, if applicable

Besides fixed wing aircraft primarily helicopters with one main rotor are considered in these Rules, for helicopters with two main rotors relevant requirements have to be specified in analogous way and agreed with the Naval Administration.

3.2 Ship Infrastructure

3.2.1 Winching Area, if applicable

- Arrangement plan to show the location on the naval ship and overall size of the area
- Obstructions nearby and their height above winching area

- Plans showing the scantlings and details of the deck used as winching area

3.2.2 Aircraft landing deck, if applicable

- Arrangement plan to show the overall location and size of the deck, definition of the different deck zones (like landing, take-off, parking including planned parking mode, etc.)
- Plans showing the scantlings and details of the deck and its substructure
- Arrangement for securing of the aircraft to the deck including deck fittings and earthing
- Deck equipment, like sheathing, railings, access possibilities, etc.

3.2.3 Hangar, if applicable

- Lay out including access to the hangar from flight deck and to the superstructure of the ship
- Arrangement for securing of the aircraft to the deck including deck fittings and earthing
- Hangar equipment, like sheathing, hangar door, electrical equipment, cranes, heating and ventilation etc.
- Plans showing the scantlings and details of the deck and its substructure

3.2.4 Further shipside equipment

- Technical documentation on lighting, aviation fuel system, fire protection/fighting, etc.

B. Flight Decks

1. Basic requirements

In addition to the requirements of these Rules the national regulations defined by the Naval Authority have to be fulfilled.

Note:
For ships of NATO nations the relevant STANAG standards have to be considered.

2. Helicopter Replenishment / Winching Area

2.1 An area defined for vertical replenishment and transfer of personnel shall only be used for the following duties:

- Transfer of personnel, injured or ill crew members, light supplies, mail, etc. using a winch in the upper part of the helicopter
- Replenishment of supplies, like provisions, ammunition, etc. from ship to ship, to/from land, using a net hanging on a (releasable) hook at the underside of the helicopter (VERTREP). In this case measures for a convenient material flow from the helicopter deck have to be established.

2.2 Positioning of the area

The area should, for operational effectiveness and safety, be located at the side, bow or stern of the ship so that a large part of the maneuvering zone can extend to outside the ship. The area should, if practicable, be positioned clear of accommodation spaces, have an adequate deck area adjacent to the fuselage and landing gear zone for crew members to muster and provide for safe access to the area from different directions.

The position of the operating area should enable the pilot of the helicopter hovering over the rotor clearance zone to have an unobstructed view of the ship and be in a position which will minimise the effect of air turbulence and flue gases.

2.3 Size of the area

If no other regulation is defined by the Naval Administration, the requirements of the NATO standard STANAG 1162 HOS may be applied. The replenishing/winching area for helicopter operations consists of three zones as shown in Fig. 23.1:

- Load Clearance Zone

  A square area clear of all obstructions with a minimum side length of 6,1 m. This zone shall have a matt, anti-slip surface.

- Fuselage and Landing Gear Clearance Zone:

  This zone reaches from board to board of the ship and extends in longitudinal direction of the ship 4,6 m fore and aft from the middle of the loading/unloading zone. Within this zone no obstructions shall be higher than 1,52 m for low hover operations respectively 4,60 m for high hover operations.

- Rotor clearance zone:

  This zone reaches from board to board of the ship and extends in longitudinal direction of the ship with a length of 75 % of the rotor diameter of the biggest permissible helicopter forward and aft from the middle of the loading/unloading zone. Within this zone no obstructions shall be higher than 4,60 m for low hover operations respectively 7,62 m for high hover operations

2.4 Marking of the area

To assist flight operations the winching area is to be marked clearly according to a recognized standard.

If the Naval Administration does not prescribe another solution, a marking of the VERTREP position according to STANAG 1162, Type 1 is recommended. It should consist of a boundary line and a rotor centre limit line, which shall be 0,3 m (1') wide lines in contrasting colour to the surrounding paint work of the ship,see Fig. 23.1.

3. Helicopter Landing Deck

3.1 Positioning of a helicopter landing area

A helicopter landing area shall be located at the main deck or a higher deck and its position shall be appropriate for the usual military landing procedures. If the landing deck is situated at the stern of the naval ship with superstructures and/or deckhouses beforehand, the angle of possible approaches should be at least 90° at each side of the ship's longitudinal axis.

A location of permanently occupied spaces, like crew accommodation, messes and service spaces under the helicopter deck shall be avoided because of safety reasons. If this is not possible, then the landing deck has to be designed completely as a crash zone, see Section 5, G.3.2.

3.2 Size of a landing deck for one helicopter

3.2.1 The regulations for evaluating the size of the landing deck have to be defined by the Naval Administration. Normally five zones can be distinguished:

- Aiming circle:

  The aiming circle is an area with a radius equal to the distance between the axis of the main rotor and the seating position of the pilot.

- Landing zone:

  Its position is defined by the location of the landing gear to the axis of the main rotor, which is the centre of the aiming circle. The zone reaches from board to board of the ship. Obstructions should be avoided in this zone.

- Rotor clearance zone:

  The length of the rotor clearance zone depends very much on the helicopter type, possible accuracy of helicopter control, etc. The width of this zone extends from board to board.

- Approach and take-off zone:

  The approach and take-off zone is extending outside the rotor clearance zone. This zone shall allow approach and take-off manoeuvres within a horizontal range of 180°.

- Crash zone:

  The landing zone and all areas outside the landing zone are to be considered as crash zone for the layout of the flight deck.

  From the boundary of these zones to fixed superstructuresof the ship (e.g. hangar), a safety distance of 1,0 m is recommended.

3.2.2 To assist flight operations and increase safety it is recommendable to clearly mark the ideal helicopter landing position according to the design on the flight deck. If this would be an aiming circle (see 3.2.1) and/or a fore and aft position line, an aft rotor centre limit line, etc. has to be decided according to the regulations of the Naval Administration.

3.3 Sonar hatch

If the helicopters used are provided with a sonar sensor below the helicopter fuselage, a sonar hatch has to be provided in the landing deck for maintenance services.

Normally such a flush deck hatch shall be sized to enable good working conditions. The hatch and its coamings to the landing deck are to meet the strength requirements of the landing deck zone in which it is located. The hatch and its cover shall be watertight and the closing mechanism shall be operated from below the landing deck. Means for at least draining the hatch manually from the flight deck have to be provided.

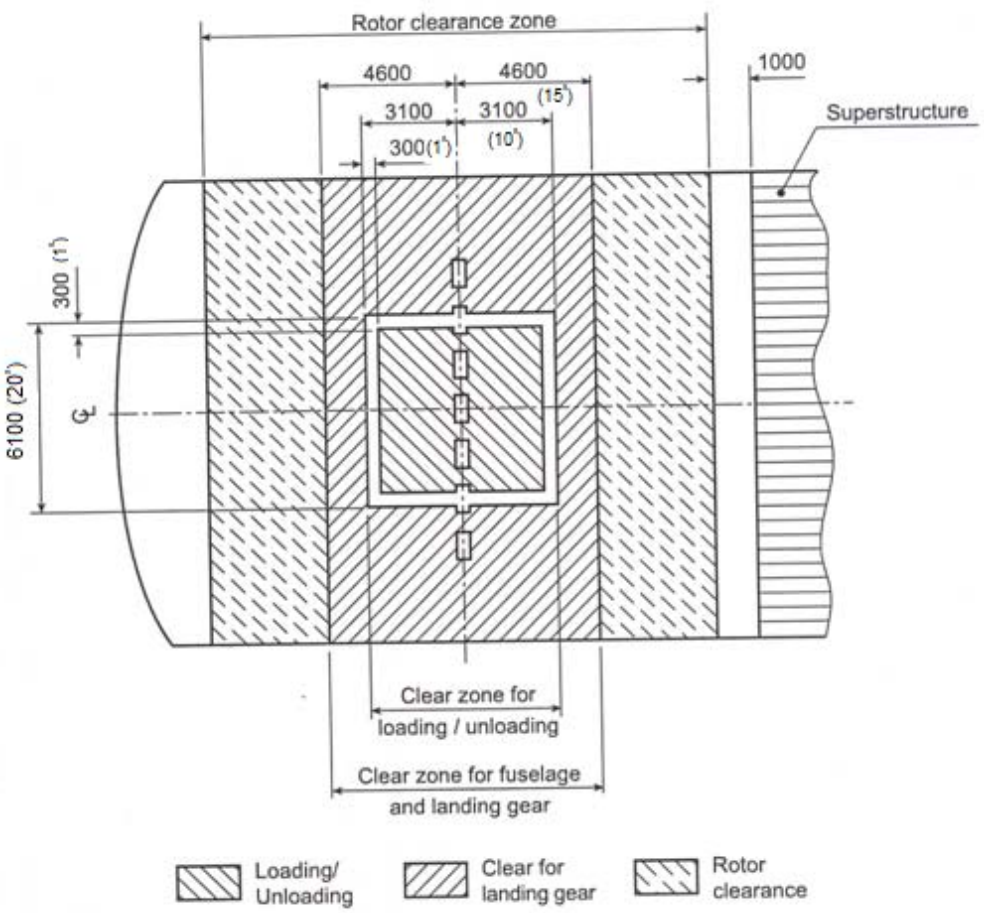

Fig. 23.1 Definition of replenishment/winching deck

3.4 Deck for several helicopters

3.4.1 For ships designed for more than one helicopter operating at the same time and with a hangar or accommodation underneath the flight deck, the layout of the complete flight deck depends on the type of flight operations and parking mode defined by the Naval Administration:

- Longitudinal parking
- Angular parking (α = 45° - 60° to longitudinal axis of ship)

Attention has to be paid to:

- Minimum rotor tip clearance distance between two adjacent helicopters and in direction of the superstructures
- From the latter boundary to fixed superstructures of the ship (e.g. “island”) a safety distance of 1,0 m is recommended
- The size of the flight deck has to allow safe access to the landed or parked helicopter fuselage from all directions to enable loading and unloading, refuelling, ammunition, fire fighting and some maintenance between the flights

3.4.2 From safety point of view it is recommendable to clearly mark the helicopter positions according to the design for landing/starting and parking on the flight deck. If this would be an aiming circle (see 3.2.1) or crossing axes (e.g. defining also the direction of angular parking) has to be decided according to the regulations of the Naval Administration.

4. Take-Off and Landing Deck for Fixed Wing Aircraft

4.1 Deck areas

The deck area shall be clearly divided into the following zones which may be marked according to the regulations of the Naval Administration:

- Landing zone
- Crash zone
- Take-off zone
- Parking zone

Normally the crash zone will be a part of the landing zone.

Note:
If no other values are defined by the Naval Authority, the following total loads may be assumed for the different zones:

- *crash zone:*

  6 x maximum take-off weight of heaviest aircraft

- *landing zone:*

  3 x maximum take-off weight of heaviest aircraft

- *parking zone, take-off zone:*

  1,5 x maximum take-off weight of heaviest aircraft

4.2 Where the flight deck is also part of a weather or superstructure deck, the scantlings are not to be less than those required for decks in the same position.

4.3 If a ramp to assist the take-off of VTOL aircraft is provided at the forward part of the flight deck, this is considered as part of the flight deck.

5. Flight Deck Equipment

5.1 Flight deck sheathing

The flight deck has to meet the following special characteristics:

- Increased structural strength at starting and landing area
- Resistant against aircraft fuel, hydraulic and lubricating oils

- Resistant against dry fire extinguishing powder and foams

- Resistant against defrosting expedient and salt

For general requirements of the sheathing, see Section 19, C.1.1.

5.2 Aircraft fastenings

In the parking zone flush fastening pots to secure the aircraft have to be provided. It is recommended to follow a certain lattice image, to be agreed with the Naval Authority. For tie down forces see Section 5, G 3.2.3.

5.3 Aircraft handling

The devices for the handling of helicopters during landing in the seaway are defined in Chapter 107 - Ship Operation Installations and Auxiliary Systems, Section 13.

Steam catapults for starting of fixed wing aircraft, landing wire and landing net systems are not part of the Classification. Classification does, however, include the effects of the forces transmitted by these devices into their foundations and the ship's hull on the relevant stress level. Mobile tractors for aircraft handling at the flight deck and in hangars may be series products for airports and are therefore also not subject to Classification.

5.4 Personnel safety measures

5.4.1 Two means of escape have to be provided from the flight deck. They shall be situated at the maximum possible distance from each other and must not start from the landing zone. See also Section 20 E 1.4

5.4.2 A railing to be turned down during helicopter operation or fixed railing at large decks has to be provided around the boundaries of the flight deck.

If hinged railings have to be mechanically/electrically/ hydraulically driven, the movement to be controlled from a central point overlooking the entire flight deck (Flight Control Centre - FCC). In any way, the railing elements are to be movable manually.

If not otherwise prescribed by the Naval Administration, the design should meet the following parameters:

- height above deck (for hinged type):

  1,2 m minimum

- turned down width:

  1,5 m minimum with an inclination of 1 : 10, outer boundary slightly higher than flight deck (approx. 100 mm)

- fastening below flight deck:

  0,3 m maximum

- recommended element length:

  2,0-2,2 m

- closed, elastic protective net:

  fire-retardant material, mesh size approx. 100 mm

- design load: 2kN/m^2

- test load: 100 kg from 1 m height to the middle of the net of an element

5.5 Drainage

The flight deck has to be drained directly over board. It has to be avoided that any liquid can penetrate into deckhouses, superstructures or the ship's hull.

C. Hangars

1. Hangar Layout

1.1 There are the following types of hangars:

- Single hangar for one helicopter, arranged symmetrically or asymmetrically
- Double hangar for two helicopters with one integrated area and one or two hangar doors
- Two single hangars for one helicopter each, with or without a corridor in between
- Large area hangar for a large number of helicopters and/or fixed wing aircraft, normally below the flight deck.

1.2 The length and the width of the hangar is to be determined by the parking mode of the harboured aircraft (with folded rotor or wings) and a save passage for the crew at all sides of the aircraft of approx. 1 m as well as the space requirements for repair and maintenance activities. The height of the hangar depends on the height of the harboured aircraft and the normally larger service height necessary for repair and maintenance. If the hangar is equipped with an overhead travelling crane, the steel structure of the hangar roof has to be arranged and increased accordingly, see also Chapter 107 - Ship Operation Installations and Auxiliary Systems, Section 3.

1.3 All operational loads to be determined for the hangar deck, like parking and maintenance of fixed wing aircraft and helicopters, movement of military vehicles and general cargo have to be considered for the design of the scantlings according to the requirements defined in Section 8.

1.4 If the length or width of the hangar deck exceeds 40 m respectively 48 m (if the walls are above watertight bulkheads) special considerations will be given to structural fire protection. The different parts of the hangar deck have to be divided by bulkheads with big revolving or sliding doors, but at least with movable fire curtains. The details for such arrangements will be discussed and agreed for every particular case, see also Section 20 and Chapter 107 - Ship Operation Installations and Auxiliary Systems, Section 9.

2. Hangar Equipment

2.1 Hangar sheathing

Normally the same sheathing to be used as for the flight deck, see B.5.1.

2.2 Aircraft and equipment fastening

The same flush fastening pots as in the flight deck will be foreseen in the hangar floor, see B.5.2.

Additionally high points for lashing against horizontal movements at the walls and other lash points on the ceiling to assist during special maintenance operations are to be provided.

All equipment and mobile devices have to be stowed and secured against movement of the ship in a seaway to avoid any danger of damage to material or personnel.

For tie down forces see Section 5, G 3.2.3.

2.3 Ambient conditions

For hangars including equipment and components contained therein the ambient conditions as defined in Section 1, A.4 are valid. If the hangar door, heating and ventilation equipment is laid out to guarantee environmental conditions as defined for inside the ship/all spaces, equipment and components can be designed accordingly. If the environmental situation inside the hangar corresponds - at least part time – to that outside the ship, equipment and components have to be designed for these more severe conditions.

2.4 Electrical equipment

Sufficient lighting as for workshops to enable safe maintenance work on the aircraft is recommended.

For night operations an additional red light system is recommended, see Chapter 105 - Electrical Installations, Section 11.

Measures for earthing of the aircraft at the hangar as well as on the flight deck have to be provided.

For further special measures to be considered for the electrical design and installations, like explosion protected equipment, etc., see Chapter 105 - Electrical Installations.

2.5 Access to the hangar

2.5.1 Hangar contributing to buoyancy

If the superstructure of a helicopter hangar is to be included in buoyancy considerations due to assumed damage of the ship, the following is to be considered.

- The hangar door(s) to the flight deck shall be watertight.

- All doors from the hangar to the other spaces in the superstructure of the ship have to be weathertight with a height of the doorway sill of 600 mm above deck above deck in pos. 1 and 380 mm above decks in pos. 2.

- TL may accept lesser heights of sills if alternative solutions with equivalent level of safety are provided and recognized. Such an alternative solution would be e.g. the arrangement of a lock of moderate size behind the hangar exit.

2.5.2 Hangar not contributing to buoyancy

- The hangar door(s) to the flight deck may be weathertight or unprotected.

- All doors from the hangar to the other spaces in the superstructure of the ship which are situated above the most unfavourable damage waterline (equilibrium or intermediate water plane) have to be weathertight with a height of the doorway sill of 600 mm above deck in pos. 1 and 380 mm above decks in pos. 2.

- All doors from the hangar to the other spaces in the superstructure of the ship which are situated below the most unfavourable damage waterline (equilibrium or intermediate water plane) have to be watertight with a height of the doorway sill of 600 mm above deck in pos. 1 and 380 mm above decks in pos. 2.

- TL may accept lesser heights of sills if alternative solutions with equivalent level of safety are provided and recognized. Such an alternative solution would be e.g. the arrangement of a lock of moderate size (to be agreed by TL) behind the hangar exit.

2.6 Additional equipment

- For hangar doors, see Chapter 107 - Ship Operation Installations and Auxiliary Systems, Section 13, D.

- For cranes in hangars, see Chapter 107 - Ship Operation Installations and Auxiliary Systems, Section 3, B.

- For ventilation, see Chapter 107 - Ship Operation Installations and Auxiliary Systems, Section 11, C.2.13

D. Provisions for Drones (UAV)

1. General

In principle the requirements for flight operations with drones (unmanned aerial vehicles – UAV) are analogues to the operation of light and very light helicopters.

But even more critical seems the securing of the drone on deck before starting and immediately after landing, if the ship and its deck are moving in the maximum allowable sea state. For bigger drones mechanical

systems will become necessary. The proposed systems are to be fixed to the ship's hull and shall be submitted and agreed with TL.

The transfer to the drone hangar and vice versa is specified in TL Rules for Ship Operation Installations and Auxiliary Systems, Section 13, C.

2. Size of start and landing deck

The size of the start and landing deck may be limited, but depends very much on the D-value of the drone and the accuracy of the flight control of the drones to be used. Therefore the size has to be defined by the Naval Administration.

3. Marking of the deck

The marking on the starting and landing deck may be limited to an aiming circle or crossed lines to fix the starting/landing position.

E. References to Further Requirements for Flight Operations

For the flight operations on naval ships also the requirements according to the following references are to be considered in the Classification process.

1. Strength of the decks

1.1 For loads on decks involved in flight operations see Section 5, H.

1.2 For dimensioning of decks involved in flight operations see Section 8, E.

2. Treatment of fuels and oils

1.1 For storage of aviation fuel, see Chapter 107 Ship Operation Installations and Auxiliary Systems, Section 7, D.

1.2 For storage of lubrication and hydraulic oils, see Chapter 107 - Ship Operation Installations and Auxiliary Systems, Section 7, C.

1.3 For equipment for re- and defuelling of aircraft, see Chapter 107 - Ship Operation Installations and Auxiliary Systems, Section 8, H.

3. Fire fighting

3.1 For fire extinguishing equipment, see Chapter 107 - Ship Operation Installations and Auxiliary Systems, Section 9, D.

3.2 For foam fire extinguishing systems, see Chapter 107 - Ship Operation Installations and Auxiliary Systems, Section 9, G.

3.3 For fire extinguishing systems for flight decks and hangars, see Chapter 107 - Ship Operation Installations and Auxiliary Systems, Section 9,I.

3.4 For portable and mobile fire extinguishers, see Chapter 107 - Ship Operation Installations and Auxiliary Systems, Section 9, M.

3.5 For structural fire protection, see Section 20.

4. Aircraft handling

4.1 For helicopter handling systems, see Chapter 107 - Ship Operation Installations and Auxiliary Systems, Section 13, B.

4.2 For drone handling systems, see Chapter 107 - Ship Operation Installations and Auxiliary Systems, Section 13, C.

4.3 For flight deck lifts, see Chapter 107 – Ship Operation Installations and Auxiliary Systems, Section 13, E.